DRAFT
CHEMICAL COMPOSITION OF MUNITIONS REPORT

FOR THE
CAMP EDWARDS IMPACT AREA
GROUNDWATER QUALITY STUDY

MASSACHUSETTS MILITARY RESERVATION
CAPE COD, MASSACHUSETTS

Prepared for

NATIONAL GUARD BUREAU
ARLINGTON, VIRGINIA

Prepared by

OGDEN ENVIRONMENTAL AND ENERGY SERVICES
239 Littleton Road, Suite 1B
Westford, Massachusetts 01886

ADM-2086

DRAFT
CHEMICAL COMPOSITION OF MUNITIONS REPORT

FOR THE
CAMP EDWARDS IMPACT AREA
GROUNDWATER QUALITY STUDY

MASSACHUSETTS MILITARY RESERVATION
CAPE COD, MASSACHUSETTS

Prepared for

NATIONAL GUARD BUREAU
ARLINGTON, VIRGINIA

Prepared by

OGDEN ENVIRONMENTAL AND ENERGY SERVICES
239 Littleton Road, Suite 1B
Westford, Massachusetts 01886

147

TABLE OF CONTENTS

Draft Chemical Composition of Munitions Report

1. INTRODUCTION

The National Guard Bureau (NGB) and the Massachusetts Army National Guard (MAARNG) were directed by the Deputy Undersecretary of Defense for Environmental Security (DUSD(ES)) in July 1996 to study the effects of military operations on the groundwater beneath the Impact Area at the Massachusetts Military Reservation (MMR). An action plan for the study was prepared in consultation with the U.S. Environmental Protection Agency Region I and other regulatory agencies to determine whether the past activities at the training range and Impact Area have affected, or have the potential to affect, groundwater quality. The study is in partial fulfillment of the requirements of EPA Administrative Order SDWA I-97-1019.

MMR has a long history of use, dating back to 1911, its most intensive use occurring during and immediately after World War II. Because more than 40 years of military and law inforcement training has been conducted on the training range at MMR, the first task in this study was a search of the MMR archives and records, applicable reference sources, and interviews to document the historical use and chemical composition of munitions used in the Impact Area.

This report summarizes the findings of the search, and is presented with a companion report on the historical training range use, to provide the background for the assessment of the impact of military operations on the groundwater beneath the Impact Area.

This report will focus on describing the chemical composition of munitions as defined by available databases and technical manuals. The goal of the analysis is to identify the chemicals that may be encountered on the Training Range.

It should be noted that the range of munitions used at MMR is not known with certainty. While good records exist for the recent past, these records are rather general. For example, the records refer to the weapons used rather than the specific munition. In response to this, attempts were made to identify any munitions that might be used in the weapon. More importantly, rates of use for the more distant past are not available. This suggests that munitions may have been used that have not been identified in this document. Attempts were made to define the general trends in munitions composition in the past.

2. BACKGROUND ON MUNITIONS COMPOSITION

A general discussion of the types and chemical composition of munitions used by the military is provided in this section as a basis for discussing the specific chemical contaminants that may have been generated either historically or recently as part of training exercises in the MMR Impact Area.

DISCLAIMER:

This document has been prepared pursuant to a government administrative order (U.S. EPA Region I SDWA Docket No. I-97-1019) and is subject to approval by the U.S. Environmental Protection Agency. The opinions, findings, and conclusions expressed are those of the authors and not necessarily those of the U.S. Environmental Protection Agency.

Draft Chemical Composition of Munitions Report

1. INTRODUCTION

The National Guard Bureau (NGB) and the Massachusetts Army National Guard (MAARNG) were directed by the Deputy Undersecretary of Defense for Environmental Security (DUSD(ES)) in July 1996 to study the effects of military operations on the groundwater beneath the Impact Area at the Massachusetts Military Reservation (MMR). An action plan for the study was prepared in consultation with the U.S. Environmental Protection Agency Region I and other regulatory agencies to determine whether the past activities at the training range and Impact Area have affected, or have the potential to affect, groundwater quality. The study is in partial fulfillment of the requirements of EPA Administrative Order SDWA I-97-1019.

MMR has a long history of use, dating back to 1911, its most intensive use occurring during and immediately after World War II. Because more than 40 years of military and law inforcement training has been conducted on the training range at MMR, the first task in this study was a search of the MMR archives and records, applicable reference sources, and interviews to document the historical use and chemical composition of munitions used in the Impact Area.

This report summarizes the findings of the search, and is presented with a companion report on the historical training range use, to provide the background for the assessment of the impact of military operations on the groundwater beneath the Impact Area.

This report will focus on describing the chemical composition of munitions as defined by available databases and technical manuals. The goal of the analysis is to identify the chemicals that may be encountered on the Training Range.

It should be noted that the range of munitions used at MMR is not known with certainty. While good records exist for the recent past, these records are rather general. For example, the records refer to the weapons used rather than the specific munition. In response to this, attempts were made to identify any munitions that might be used in the weapon. More importantly, rates of use for the more distant past are not available. This suggests that munitions may have been used that have not been identified in this document. Attempts were made to define the general trends in munitions composition in the past.

2. BACKGROUND ON MUNITIONS COMPOSITION

A general discussion of the types and chemical composition of munitions used by the military is provided in this section as a basis for discussing the specific chemical contaminants that may have been generated either historically or recently as part of training exercises in the MMR Impact Area.

DISCLAIMER:

This document has been prepared pursuant to a government administrative order (U.S. EPA Region I SDWA Docket No. I-97-1019) and is subject to approval by the U.S. Environmental Protection Agency. The opinions, findings, and conclusions expressed are those of the authors and not necessarily those of the U.S. Environmental Protection Agency.

Generally, munitions are composed of energetic materials or chemicals that can be divided into three categories: explosives, propellants, and pyrotechnic. There are considerable variations among the properties of the compounds that constitute these three classes of energetic materials. A summary of physical and chemical properties of these compounds is provided below.

2.1 Explosives

Explosive materials have the potential to chemically change from the solid state to large volumes of hot gases very quickly. High Explosives (HE) are materials that undergo that change at a rate faster than the speed of sound. Examples of such materials are TNT, Amatol, and mercury fulminate. Low explosives (LE), such as black powder, smokeless powder, and rocket propellant, are those materials that undergo the change at speeds slower than the speed of sound. A list of commonly used explosives is provided in Table 2-1.

The variation in the properties of explosives is put to use in armaments (explosive rounds) by an arrangement known as the "Explosive Train" - an arrangement of elements according to decreasing sensitivity and increasing potency. The primary explosive usually constitute the initiator (heat, spark, impactor, friction) of the train. The second element, the booster, usually contains a less sensitive material that is a high explosive. The third and final component, the bursting charge, and consists of a secondary explosive. Each of these elements introduces a unique combination of chemical constituents to the armament. A more comprehensive discussion of the composition, size, and application of explosives used by the military is provided in Appendix A - Explosives and Demolitions (U.S. Army Field Manual 5-250, June 1992).

2.2 Propellants

Propellants are divided into the following categories based on composition:

a) Single-based compositions contain nitrocellulose as the chief ingredient, and may contain inorganic nitrates, nitro-compounds, and non-explosive compounds, such as metals, metallic salts, carbohydrates, and dyes.
b) Double-based composition generally applies to compositions containing both nitrocellulose and nitroglycerin. Like the single-based propellants, double-based propellants usually contain additives.
c) Triple-based composition applies to propellants containing three explosive ingredients with nitroguanidine as the primary ingredient, in addition to components of this class of propellants.
d) Mixed nitrate esters or composite propellants are a class of propellant generated by mixing and matching the other three classes or propellants; all usually have the same

components except for nitroguanidine. This class of propellants were developed primarily as a replacement for the triple-based propellants.

Single-based propellants are used in cannons, small arms, and grenades; double-based compositions are used in cannons, small arms, mortars, rockets and jet propulsion units; and triple-based propellants are used exclusively in cannon units. Composite propellants are used primarily in rocket assemblies and propulsion units. The choice of propellant is based on ballistic and physical requirements, and a given propellant composition could be suitable for several applications. Common propellants used by the military are listed in Table 2-2.

2.3 Pyrotechnics

Pyrotechnic compositions are divided into the following categories based on use:

a) Flare and Signals which burn to produce light for illumination. Signals produce colored flames that are used as semaphores.
b) Colored and White Smoke for signaling.
c) Tracers and Fumers are used as small smoke producing charges placed in projectiles; and used to track the flight of the projectile. Fumers are used to produce smoke at the proper time to fill vacuums created behind the projectile so as to reduce the drag on the projectile.
d) Incendiaries produce large amounts of heat for the purpose of causing fires.
e) Delays and Fuses are designed to burn for a predetermined time, and used to provide an interval between ignition and detonation of an explosive. A delay is an explosive igniter that consists of an initiator, a delay column, and an output charge and a fuse is a length of cord made of flammable material attached to a device to provide the same effect.
f) Photoflash Composition is a loose mixture of oxidizers and metallic fuels that, when ignited, burns with explosive violence in a very short time. Photoflashers are used for military aerial photography.
g) Igniters and Initiators are used to ignite propellants and initiate detonation of explosive charges.

(Table 2-3 lists pyrotechnics known to have been used in the MMR Impact Area)

TABLE 2-1:
COMMONLY USED EXPLOSIVES

NAME	DESCRIPTION	REMARKS
BLACK POWDER	BROWN TO BLACK	MANUFACTURED IN GRAINS THAT RANGE IN SIZE FROM SMALLER THAN SALT GRAINS TO GRAINS AS LARGE AS SMALL PEBBLES. HIGHLY SENSITIVE TO IGNITION BY HEAT, FRICTION, FLAME, SPARK. WHEN WET, IT IS CORROSIVE TO MOST METALS.
TNT	LIGHT YELLOW TO BROWN OR GRAY	LIGHTLY CORROSIVE WITH LEAD. USED IN BOMBS, GRENADES, DEMOLITION CHARGES, PROJECTILES. EXUDES AT ELEVATED TEMPERATURES. MODERATELY TOXIC BY SKIN ABSORPTION OR INHALATION.
EXPLOSIVE D	BRIGHT YELLOW TO ORANGE. ALSO CALLED AMMONIUM PICRATE.	RELATIVELY INSENSITIVE. HIGHLY TOXIC BY INHALATION, INGESTION, OR SKIN ABSORPTION
AMATOL	LIGHT BROWN TO YELLOW/MIXTURE OF TNT AND EXPLOSIVE D	SLIGHT HYGROSCOPIC. HAS CORROSIVE EFFECTS ON COPPER, BRONZE, LEAD, BRASS. HIGHLY TOXIC BY INHALATION, SKIN CONTACT, INGESTION.
COMPOSITION B	WHITE TO BROWNISH YELLOW, MIXTURE OF TNT AND EXPLOSIVE D	SLIGHTLY CORRODES COPPER, BRASS, CADMIUM, ZINC. USED IN BOMBS, PROJECTILES, GRENADES, SHAPED CHARGES.
OCTOL	LIGHT BROWN	USED IN BOMBS, PROJECTILES, SHAPED CHARGES.

TABLE 2-1 (continued)
COMMONLY USED EXPLOSIVES

NAME	DESCRIPTION	REMARKS
RDX	WHITE. ALSO CALLED CYCLONITE	SENSITIVE TO IMPACT AND FRICTION.SLIGHTLY CORROSIVE WITH COPPER, BRASS, MILD STEEL, CADMIUM. MODERATELY TOXIC BY INHALATION OR INGESTION.
HMX	WHITE. ALSO CALLED OCTOGEN	SENSITIVE TO IMPACT AND FRICTION. SLIGHTLY TOXIC.
PETN	WHITE	SENSITIVE TO IMPACT. SLIGHTLY CORROSIVE TO BRASS, CADMIUM, ZINC. VERY SLIGHTLY TOXIC.
LEAD AZIDE	WHITE TO LIGHT BROWN	VERY SENSITIVE TO IMPACT, FRICTION, SPARKS. CORROSIVE TO COPPER, ZINC. VERY SLIGHTLY TOXIC.
LEAD STYPHNATE	LIGHT ORANGE TO REDDISH BROWN	SAME AS LEAD AZIDE.
MERCURY FULMINATE	GRAYISH	VERY SENSITIVE TO IMPACT, FRICTION, SPARKS. CORROSIVE TO ALUMINUM, MAGNESIUM, COPPER, BRONZE, COPPER, ZINC, BRASS. HIGHLY TOXIC THROUGH SKIN ABSORPTION, INHALATION, INGESTION. SYMPTOMS RESEMBLE MERCURY POISONING.

TABLE 2-2:
COMMON MILITARY PROPELLANT COMPOUNDS

PRIMARY COMPONENTS

NITROCELLULOSE
NITROGLYCERIN
NITROGUANIDINE

SECONDARY COMPONENTS

BARIUM NITRATE
POTASSIUM NITRATE
POTASSIUM SULFATE
LEAD CARBONATE
DIBUTYLPHTHALATE
DINITROTOLUENE
DIETHYLPHTHALATE
DIPHENYLAMINE
ETHYL CENTRALITE
GRAPHITE

TABLE 2-3:
PYROTECHNIC AGENTS USED AT MMR

SYMBOL	COMMON NAME	VISUAL IDENTIFICATION	ACTION
CS	NONE	WHITE CRYSTALLINE SOLID	TEAR AGENT
HC	HEXACHORO-ETHANE	WHITE SOLID	SCREENING SMOKE
WP	WHITE PHOSPHOROUS	PALE YELLOW SOLID	SCREENING SMOKE AND INCENDIARY
RP	RED PHOSPHOROUS	REDDISH BROWN POWDER	SCREENING SMOKE

3. METHODOLOGY

Available sources of information on the types of munitions used in weapons fired at MMR and the structural and chemical composition of these munitions included:

- MMR munitions use records,
- MMR range manuals,
- technical and field manuals on the used of military explosives and demolitions,
- conversations with personnel familiar with training operations and exercises conducted at MMR, and
- conversations with personnel familiar with military weapons and munitions.

Because a comprehensive list of the types and quantities of munitions used in the Impact Area throughout its history is not available, the munitions utilization reports from 1989 and 1994 through 1996 were used to generate a list of munitions used in recent years within the Impact Area. Additions to the list were compiled through the review of life cycle reports and technical manuals provided by the Ammunition Supply Point. Other sources of information included the review of training range standard operating procedures (SOPs), an MMR training range facilities report, range safety regulations, and range use histories (provided in the companion report). The munitions summary list was further supplemented with information gather from discussions with personnel at the Unified Environmental Planning Office (UEPO), the MMR range control office, the Army office of the Brigadier General, Picatinny Arsenal, the Waterways Experiment Station, and the Cold Regions Research Laboratory. Telephone conversation and interview logs sheets are provided in Appendix B.

Due to data availability, the information presented below is focused on munitions that are generally currently in use. A variety of weapons, and their associated munitions, which have been used at MMR in the past are not in current use. In order to ascertain how representative the chemical content of these munitions is to historically employed muntions, a number of phone calls were placed to Picatinny Arsenal (see telephone communication summaries for Bunting, Suarez, and Walch in Appendix B). The engineers at Picatinny indicated that the composition of projectiles (i.e., bullets), explosives, primers, and casings are very likely to be stable over the last number of decades. For example, bullets for a variety of weapons are composed of similar materials and those materials have been used for many years. There have been changes in the composition of projectiles in recent years in an attempt to achieve better penetrating capability. Such new munitions are not likely to be used on a training range due to their high cost. The quality of propellents has changed over the years as different manufacturers use different mixtures and as the Army has required greater range out of it's munitions. Similarly, the composition of incendiary, light-, and smoke-generating materials have changed and continue to

evolve. The exception to this is the use of white and red phosphorous which has been common for many years.

There is little information available on the dates of manufacture for munitions. According to the training manual on military explosives (see Appendix A) prepared by the USAEC technical information center, the technology of explosives has constantly evolved over the last few centuries. Prior to World War I, the manufacture of TNT was a formalized process, but since then become controlled, highly guarded manufacturing process. Little documentation is thus available on the dates of manufacture. A search of the MIDAS database, the U.S. Technical Information Center (TIC) of Aberdeen Proving Ground, Army technical manuals, and discussions with several knowledgeable military personnel did not provide substantive information.

The primary source of information on the composition of munitions identified during the search was provided in the Munitions Items Disposition Action System (MIDAS) database. The MIDAS database was created by the the U.S. Army Defense Ammunition Center and School and tracks munitions by the Department of Defense Activity Code (DODAC) designations for each type. The database includes chemical composition of the various components (e.g. propellant, casing, projectile, and primer) for each munition.

The MIDAS data sheets include general information on the construction of each munition, but detailed construction and use specification information was complied from from several Army Ammunition Data Sheets to supplement the MIDAS information.

Though the MIDAS database is the most complete source of information on munitions, it does not contain comprehensive information on the chemical composition of pyrotechnics (munitions that display light, smoke, or noise). General information on these munitions, contained in Section 2, was gathered from the Army Corps of Engineers Waterway Experiment Station and Cold Regions Research Laboratory.

4. FINDINGS

The list of munitions presumed to have been used in the Impact Area at MMR was complied from the 1989 and 1994 through 1996 munitions utilization reports and supplemented with the various other sources of munitions presumed to be used at MMR.

The data sheets from a download from the MIDAS database are presented in Appendix C. Summary tables listing DODAC codes, weapons type, quantity used during a given year (1989), search results, and number of pages have been included in the download. It was not always possible to obtain a report for a given munition from MIDAS, as it appears that MIDAS is incomplete with respect to some DODAC codes. If the search was unsuccesful, this is reported in the tables contained in Appendix C. These tables are organized by DODAC code. The MIDAS report includes a complete listing of the chemical composition and physical parts of the respective munitions.

A subset of the MIDAS database was generated to identify the predominant compounds in each munition type. The composition of each component of each munition was screened to select all of the compounds present in excess of 10 percent (by weight) or that contain either lead or mercury. The resulting summary (Table 4-1) lists DODAC designation, munitions type, significant constituent compounds and their respective percent (by weight), and the weight of some individual constituents. Note that the chemical content of many munitions are very similar. For this reason, there is extensive cross-referencing among the various munitions in Table 4-1. Also note that no mercury containing materials were found in the search of the MIDAS database for the munitions identified.

The information in Table 4-1 has been sorted to arrive at a listing of the all of the unique names among the major components contained in that set of munitions (Table 4-2). These components are presented in alphabetical order. Contained in this list are several explosives (HMX, RDX, TNT, etc.); various dyes; metals contained in casings, projectiles, and as reactive agents; plastics used as casings; and a variety of miscellaneous organic chemicals (e.g., sugar, formaldyde/melamin, lactose, etc.).

Information on munitions used at MMR was also obtained from US Army technical manuals on munitions and environmental life cycle analysis reports. The first of these documents include technical specifications and diagrams of the munitions. The technical specifications include the intended use of munition including the intended weapons and their application; technical data on composition of the various munitions components; and references to other sources of information. The sketches include dimensions of various components. Table 4-3 catalogs those documents that are available on MMR munitions. The table includes the munitions type, the

applicable weapon(s), a reference to the source materials, whether a MIDAS database report (Appendix C) was obtained, and the DODAC code listed for the munition. The full text of these documents are contained in Appendix D.

Finally, material was identified on the composition and toxicity of smoke-generating materials. These are provided as Appendix E.

TABLE 4-1:
PRINCIPAL COMPONENTS OF MUNITIONS

Table 4-1. Principal Components of Munitions				
DODAC	Type	Compound	%	Weight (GR)
A066	**Ctg. 5.56mm Ball M193**			182.00
	Case	Cu Alloy		95.00
	Prop WC844	NC (N 13.15)	83.22	28.50
		Nitroglycerin	10.00	
	Prop CMR 170	NC (N 13.15)	88.95	25.80
	Primer #41			4.00
		Sb Sulfide		15.00
		Pb Styphnate		37.00
	Bullet M193			56.00
		Cu Alloy		17.50
		Pb Sb		38.50
A068	**Ctg. 5.56mm Tracer M196**			177.00
	Case	Cu Alloy		95.00
	Prop IMR 8208-M			25.30
		NC (N 13.15)	93.17	
	Prop WC844 (ALT)	Same as A066		
	Prop CMR 170 (ALT)	Same as A066		
	Primer #41	Same as A066		
A071	**Ctg. 5.56mm M193**	Same as A066		
A080	**Ctg. 5.56mm Blk M200**			109
	Case	Cu Alloy		98.1
	Prop HPC13			7
		NC (N 13.25)	66.1	
		Nitroglycerin	28.5	
	Prop WC814 (ALT)			7
		NC (N13.15)	84.1	
		Nitroglycerin	13	
	Primer #41	Same as A066		
A111	**Ctg. 7.62mm Blk M82**			234.5

TABLE 4-1 (Continued)
PRINCIPAL COMPONENTS OF MUNITIONS

Table 4-1. Principal Components of Munitions				
DODAC	Type	Compound	%	Weight (GR)
	Case	Cu Alloy		213
	Prop WC818			16
		NC (N13.15)	87.95	
	Primer Perc #34			5.43
		Sb Sulfide	15	
		Ba Nitrate	32	
		Pb Styphnate	37	
A130	**Ctg. 7.62mm Nato Ball M80**			370
	Case	Cu Alloy		170
	Prop WC846			46
		NC (N13.15)	82.97	
	Bullet M80			149
		Cu Alloy Clad Steel		
		Pb Sb		
	Primer Rerc #34	Same as A111		
A131	Ctg. 7.62mm 4 Ball M59/M80/1 Tr M62 Lnkd			393
	Case	Cu Alloy		190
	Prop WC846	Same as A130		
	Prop IMR 4475 (ALT)			41
		NC (N13.15)	90.18	
	Primer Rerc #34	Same as A111		
	Bullet			150.5
	Jacket	Brass		57
	Core	Steel		55
	Filler Point	Pb Sb		24
	Filler Base	Pb Sb		24.5
	Ctg. 7.62mm Nato Ball M80 (ALT)			370
	Case	Cu Alloy		170
	Prop WC846	Same as A130		
	Primer Rerc #34	Same as A111		

TABLE 4-1 (Continued)
PRINCIPAL COMPONENTS OF MUNITIONS

Table 4-1. Principal Components of Munitions				
DODAC	Type	Compound	%	Weight (GR)
	Bullet M80			149
	Jacket	Cu Alloy Clad Steel		34.5
	Slug	Pb Sb		114
	Ctg. 7.62mm Tr M62			383
	Case	Cu Alloy		190
		Cu	70	
		Zn	29.88	
	Prop Type II			47
		NC	89.3	
	Primer Perc #36			5.3
		Pb Styphnate	36	
		Ba Nitrate	29	
	Bullet M62			146
	Jacket	Cu Alloy Clad Steel		60
	Filler Point	Pb Sb		72
A136	**Ctg. 7.62mm Nato Spec Ball M118**			390
	Case	Cu Alloy		170
	Prop WC750			42
		NC (N 13.1)	80.65	
		Nitroglycerin	10.25	
	Prop IMR 4895 (ALT)			42
		NC (N 13.15)	91.18	
	Prop WC846	Same as A130		
	Bullet			172.9
	Slug			114.2
	Jacket			58.7
A143	**Ctg. 7.62mm Nato Ball M80 Lnkd**			370
	Case	Same as A136		
	Prop WC846	Same as A130		
	Bullet M80	Same as A131		

TABLE 4-1 (Continued)
PRINCIPAL COMPONENTS OF MUNITIONS

Table 4-1. Principal Components of Munitions				
DODAC	Type	Compound	%	Weight (GR)
	Primer Perc #34	Same as A111		
A363	**Ctg. 9mm Ball M882**			179
	Prop HPC 33			5.2
		NC (N 13.13)	85.45	
	Prop WPR280 (ALT)			5.2
		NC (N 13.1)	78.68	
		Nitroglycerin	15	
	Bullet Ball 9mm			124
	Jacket			23
	Slug			101
A400	**Ctg. Cal. 38 spec Ball M41**			203
	Case	Cu Alloy		63.5
	Prop SR7325			4.8
		NC (N 13.15)	98.52	
	Prop HPC 1 (ALT)			4.8
		NC (N 13.25)	58.85	
		Nitroglycerin	38.75	
	Primer Perc 108M			3
		Pb Styphnate	40	
		Sb Sulfide	16	
		Ba Nitrate	30	
	Primer Perc #49 (ALT)			3
		Pb Styphnate	38	
		Ba Nitrate	43	
	Primer Perc #100 (ALT)			3
		Pb Styphnate	39	
		Sb Sulfide	19	
		Ba Nitrate	41	
	Primer Perc #500 (ALT)			3
		Pb Styphnate	30	
		Sb Sulfide	14	
		Ba Nitrate	43	
	Bullet M41			132

TABLE 4-1 (Continued)
PRINCIPAL COMPONENTS OF MUNITIONS

Table 4-1. Principal Components of Munitions

DODAC	Type	Compound	%	Weight (GR)
	Slug	Pb Sb		109
	Jacket	Cu Alloy		23
A475	**Ctg Cal .45 Ball M1911**			331
	Case	Cu Alloy		93
	Prop SR7970			5
		NC (N 13.15)	96.24	
	Prop HPC 18 (ALT)			5
		NC (N 13.15)	76.95	
		Nitroglycerin	20	
	Primer Perc 111M			5
		Pb Styphnate	37	
		Sb Sulfide	19	
		Ba Nitrate	29	
	Primer Perc #150 (ALT)			5
		Pb Styphnate	39	
		Sb Sulfide	19	
		Ba Nitrate	41	
	Primer Perc #73 (ALT)			5
		Pb Styphnate	38	
		Ba Nitrate	43	
	Bullet M1911			234
	Slug	Pb Sb		197
	Jacket	Cu Alloy Clad Steel		34
	Jacket (Alt)	Cu Plated Steel		34
A483	**Ctg. Cal .45 Ball Match M1911**			334
	Case	Same as A475		
	Prop SR7970	Same as A475		
	Prop HPC 18 (ALT)	Same as A475		
	Primer Perc 111M	Same as A475		
	Primer Perc #150 (ALT)	Same as A475		
	Primer Perc #73 (ALT)	Same as A475		
	Bullet			234
	Slug	Pb Sb		197

TABLE 4-1 (Continued)
PRINCIPAL COMPONENTS OF MUNITIONS

Table 4-1. Principal Components of Munitions				
DODAC	Type	Compound	%	Weight (GR)
	Jacket	Cu Alloy		37
A555	**Ctg. Cal. .50 Ball M2 Lnkd**			1813
	Case	Brass		870
	Prop WC860			235
		NC (N 13.15)	78.67	
	Primer Perc #50M			18.5
		Ba Nitrate	43	
		Pb Styphnate	38	
	Primer Perc #315 (ALT)			
		Ba Nitrate	41	
		Pb Styphnate	39	
		Sb Sulfide	19	
	Primer Perc #35 (ALT)			18.5
		Ba Nitrate	39	
		Pb Styphnate	28	
		Sb Sulfide	12	
		Al Powder	10	
	Primer Perc #257 (ALT)			18.5
		Ba Nitrate	33	
		Pb Styphnate	36	
		Sb Sulfide	13	
	Bullet			709
	Core	Steel		400
	Jacket	Cu Alloy		253
	Point Filler	Pb Sb		56.5
A557	**Ctg. Cal. .50 4 Ball M33/1 Tr M17 Lnkd M9**			1737
	Case	Brass		870
	Prop IMR 5010			225
		NC (N 13.15)	89.92	
	Primer Perc #50M	Same as A555		
	Primer Perc #315 (ALT)	Same as A555		
	Primer Perc #257 (ALT)	Same as A555		
	Primer Perc #35 (ALT)	Same as A555		

TABLE 4-1 (Continued)
PRINCIPAL COMPONENTS OF MUNITIONS

Table 4-1. Principal Components of Munitions				
DODAC	Type	Compound	%	Weight (GR)
	Bullet M17			615
	Jacket	Brass		235
	Core	Steel		352
	Pep (Ign Comp I-280*2)			0.2428
		Mg Powder	15	
		Sr Peroxide	76.5	
	Pep (Tracer Comp R-256*5)			0.8571
		Mg Powder	20.7	
		Sr Peroxide	26.7	
		Sr Nitrate	33.3	
	Bullet M17 (ALT)			643
	Jacket	Cu Alloy Clad Steel		365
	Slug	Pb Sb		207
	Pep(Ign Comp I-508)			11
		Ba Peroxide	79.2	
		Mg Powder	14.18	
	Pep(Ign Comp I-276)(ALT)			11
		Ba Peroxide	81.94	
		Mg Powder	15	
	Pep(Tracer Comp R-256*5)	Same as above		15
	Pep(Tracer Comp R-321)			40
		Polyvinyl Chloride	16	
		Sr Nitrate Anhydrou	52	
		Mg Powder	26	
	Pep(Tracer Comp R-284) (ALT)			40
		Polyvinyl Chloride	17	
		Sr Nitrate	55	
		Mg Powder	28	
	Ctg. Cal .50 Ball M33			1782
	Prop WC860	see A555		233
	Prop IMR 5010 (ALT)	see A557		233
	Case	Brass		870
	Bullet M33			661
	Jacket	Brass		235
	Filler Point	Na Carebonate Monohydrate		15

TABLE 4-1 (Continued)
PRINCIPAL COMPONENTS OF MUNITIONS

Table 4-1. Principal Components of Munitions				
DODAC	Type	Compound	%	Weight (GR)
	Primer Perc #50M	see A555		18.5
	Primer Perc #257 (ALT)	see A555		18.5
	Primer Perc #35 (ALT)	see A555		18.5
	Primer Perc #315 (ALT)	see A555		18.5
A598	**Ctg. Cal .50 Blk M1A1 Lnkd**			940
	Case	Brass		870
	Prop Hi Skor 700X			44.6
		NC	67.4	
		Nitroglycerin	30	
	Prop WC440S (ALT)			44.6
		NC (N 13.10)	75.69	
		Nitroglycerin	17	
	Primer Perc #50M	see A555		18.5
	Primer Perc #35 (ALT)	see A555		18.5
	Primer Perc #257 (ALT)	see A555		18.5
	Primer Perc #315 (ALT)	see A555		18.5
B506	**Ctg. 40mm Red Smk M713**			0.49 (lb)
	Fuze Output Comp			175 gm
		Boron	18.7	
		Ba Chromate	37.4	
		K Nitrate	33.7	
	Fuze Delay Comp			1100 gm
		Boron	11.7	
		Ba Chromate	29	
		Cr Oxide	59.3	
	Fuze 1st Fire Comp			220 gm
		Boron	18	
		Ba Chromate	81	
	Pyro Comp Red Smk			74.1 gm
		Suger	16.4	
		K Chlorate	26.3	
		Dye Disperse Red	43.7	
	Pyro comp Red Smk (ALT)			74.1 gm

TABLE 4-1 (Continued)
PRINCIPAL COMPONENTS OF MUNITIONS

Table 4-1. Principal Components of Munitions				
DODAC	Type	Compound	%	Weight (GR)
		Na bicarbonate	16.4	
		K Chlorate	25.6	
		Dye Disperse Red	40.6	
	Prop M9			320 gm
		NC	57.52	
		Nitroglycerin	39.84	
	Primer Perc Assy M42 (alt)			5
	Pep (primer mix pa-101)			0.33
		Pb Styphnate	53	
		Sb sulfide	10	
		Ba Nitrate	22	
		Al Powder	10	
	Pep (primer mix #793)(alt)			0.33
		Sb sulfide	30	
		Ca silicide	15	
		K chlorate	35	
		Pb thiocyanate	17	
	Pep (primer mix #5086)(alt)			0.33
		Sb sulfide	20	
		Pb Styphnate	26	
		Ca silicide	10.5	
		Ba Nitrate	41.5	
B508	**Ctg 40mm Grn Smk M715**			0.49 lb
	Fuze Output Comp	see B506		175 mg
	Fuze Delay Comp	see B506		1100 mg
	Fuze 1st Fire Comp	see B506		220 gm
	Pyro Comp Red Smk	see B506		74.1 gm
		Na Bicarbonate	13.3	
		S	10.2	
		K chlorate	26	
		Dye solvent grn 3	35.6	
	Prop M9	see B506		330 mg
	Pep (primer mix pa-101)	see B506		0.33
	Pep (primer mix #793)(alt)	see B506		0.33
	Pep (primer mix #5086)(alt)	see B506		0.33

TABLE 4-1 (Continued)
PRINCIPAL COMPONENTS OF MUNITIONS

Table 4-1. Principal Components of Munitions				
DODAC	Type	Compound	%	Weight (GR)
B509	**Ctg. 40mm Ylw Smk M716**			0.49 lb
	Fuze Output Comp	see B506		175 mg
	Fuze Delay Comp	see B506		1100 mg
	Fuze 1st Fire Comp	see B506		220 gm
	Smk mix ylw comp			
		Na Bicarbonate	13.4	
		S	10.2	
		K chlorate	26	
		Dye yellow 4	40.6	
	Prop M9	see B506		330 mg
	Pep (primer mix pa-101)	see B506		0.33
	Pep (primer mix #793)(alt)	see B506		0.33
	Pep (primer mix #5086)(alt)	see B506		0.33
B519	**Ctg 40mm Trace M781**			205 gm
	dye signal			5.4 gm
		formaldehyde/mela	89.48	
	Prop M9	see B506		330 mg
	Pep (primer mix pa-101)	see B506		0.33
	Pep (primer mix #793)(alt)	see B506		0.33
	Pep (primer mix #5086)(alt)	see B506		0.33
B535	**Ctg 40 mm white star para M583A1**			.44 lb
	Prop M9	see B506		330 mg
	Pep (primer mix pa-101)	see B506		0.33
	Pep (primer mix #793)(alt)	see B506		0.33
	Pep (primer mix #5086)(alt)	see B506		0.33
	Pep (delay comp)			740 mg
		Ba chromate	33	
		K perchlorate	33	
		W	33	
	Pep (ign comp mix)			280 mg
		B amorphous Pwdr	25	

TABLE 4-1 (Continued)
PRINCIPAL COMPONENTS OF MUNITIONS

Table 4-1. Principal Components of Munitions				
DODAC	Type	Compound	%	Weight (GR)
		K perchlorate	75	
	Pep (black pwdr cl7) (alt)			280 gm
		K nitrate	74	
		S	10.4	
		Charcoal	15.6	
	Pep(illum comp)			80 gm
		Resin polyester	10.88	
		Pwdr mtl ellipsoidal	20	
		Na nitrate	41	
		Pwdr metal	28	
	Pep (ign comp)			3 gm
		B amorphous pwdr	19	
		Ptfe	18	
		K nitrate	58	
	Pep (Black pwdr cl1*1)			1 gm
		K nitrate	74	
		S	10.4	
		Charcoal	15.6	
	Pep (Pyro 1st fire comp ylw)			5 gm
		Ba nitrate	50	
		Tetranitrocarbazole	10	
		Si	20	
		Zr hydride	15	
B630	**Ctg 60mm smk M302A1**			4.1 lb
	Pellet (pellet expl comp)			7.5 gm
		RDX	98.5	
	Pep (comp A5) (alt)			7.5 gm
		RDX	98.5	
	Prop M9	see B506		40
	Pellet (Black pwdr cl7)	see B535 (pep black pwdr cl7)		1.65
	Pep (primer mix #70)			0.37
		Pb thiocyanate	25	
		K chlorate	53	
		Sb sulfide	17	
	Pep (primer mix #70) (alt)			0.48

TABLE 4-1 (Continued)
PRINCIPAL COMPONENTS OF MUNITIONS

Table 4-1. Principal Components of Munitions

DODAC	Type	Compound	%	Weight (GR)
		Pb thiocyanate	22.5	
		K chlorate	50.5	
		Sb sulfide	14.5	
		ground galss	10	
	Flake square (prop M8)			55
		Nitroglycerin	43	
		NC	52.15	
	Pep (comp A5)	see above		650 mg
	Pep (tetryl)			0.28 gm
		tetryl	100	
	Pep (primer mix*2)			0.92
		Pb styphnate	40	
		Sb sulfide	15	
		Ba nitrate	20	
		Pb azide	20	
	Pep (primer mix*3)(alt)			0.92
		Pb styphnate	40	
		Sb sulfide	15	
		Ba nitrate	20	
		Pb azide	20	
	Pep (primer mix*4)(alt)			0.92
		Pb styphnate	40	
		Sb sulfide	15	
		Ba nitrate	20	
		Pb azide	20	
	Pep (primer mix*5)(alt)			0.92
		Pb styphnate	40	
		Sb sulfide	15	
		Ba nitrate	20	
		Pb azide	20	
	Pep (primer mix*6)(alt)			0.92
		Pb styphnate	40	
		Sb sulfide	15	
		Ba nitrate	20	
		Pb azide	20	
	Pep (primer mix*7)(alt)			0.92
		Pb styphnate	40	

TABLE 4-1 (Continued)
PRINCIPAL COMPONENTS OF MUNITIONS

Table 4-1. Principal Components of Munitions				
DODAC	Type	Compound	%	Weight (GR)
		Sb sulfide	15	
		Ba nitrate	20	
		Pb azide	20	
	Pep (Pb azide)			2.77
		Pb azide	100	
	Pep (Pb azide)(alt)			2.77
		Pb azide	100	
	Pep (RDX)			1.62
		RDX	100	
B632	**Ctg 60mm HE M49A4**			3.25 lb
	Pep (comp B)			0.42 lb
		RDX	60	
		TNT	39	
	Pep (comp B4) (alt)			0.42 lb
		RDX	60	
		TNT	40	
	Prop M9	see B506		40
	Pellet (black pwdr cl7)	see B630		1.65
	Pep (primer mix#70)	see B630		0.37
	Pep (primer mix#70) (alt)	see B630		48
	Flake square (Prop M8)	see B630		55
	Pellet booster			16.9 gm
		RDX	100	
	Pellet booster (alt)			16.9 gm
		Tetryl	98	
	Pellet booster (alt)			16.9 gm
		RDX	98.5	
	Pep (primer mix*2)	see B630		
	Pep (primer mix*3)(alt)	see B630		
	Pep (primer mix*4)(alt)	see B630		
	Pep (primer mix*5)(alt)	see B630		
	Pep (primer mix*6)(alt)	see B630		
	Pep (primer mix*7)(alt)	see B630		
	Pep (Pb azide)	see B630		
	Pep (Pb azide)(alt)	see B630		

TABLE 4-1 (Continued)
PRINCIPAL COMPONENTS OF MUNITIONS

Table 4-1. Principal Components of Munitions				
DODAC	Type	Compound	%	Weight (GR)
	Pep (RDX)	see B630		
B642	**ctg 60mm HE M720**			3.75 lb
	Prop M9	see B506		52
	Pellet (black pwdr cl7)	see B630		3.12
	Pep (primer mix #70)	see B630		0.37
	Pep (primer mix #70) (alt)	see B630		0.48
	Pep (comp B)	see B632		0.79
	Prop M10			125
		NC (N 13.15)	84.2	
	Container top slurry			1.28 gm
		NC	71	
		Fiber craft	10.75	
	Container bottom slurry			1.28 gm
		NC	71	
		Fiber craft	10.75	
	Closure			1.1
		NC	71	
		Fiber craft	10.75	
	Container top paper (alt)			1.28 gm
		NC	78	
	Container bottom paper (alt)			1.28 gm
		NC	78	
	Closure (alt)			1.1
		NC	71	
		Fiber craft	10.75	
	Pellet booster (comp A5)			8 gm
		RDX	98.5	
	Pep (pbxn-5)			152 mg
		HMX	95	
	Pep (HMX)			16 mg
		HMX	98	
	Pep (HMX) (alt)			16 mg
		HMX	98	
	Pep (pb azide)	see B630		14 mg
	Spot Chg			1.6 mg

TABLE 4-1 (Continued)
PRINCIPAL COMPONENTS OF MUNITIONS

Table 4-1. Principal Components of Munitions				
DODAC	Type	Compound	%	Weight (GR)
		N-amyl alchohol	32.16	
		Pb styphnate	53.71	
	Pep (pb azide)	see B630		85 mg
	Pep (pb azide) (alt)	see B630		85 mg
	Pep (RDX)	see B630		32.5 mg
	Pep (RDX Blend 98/2) (alt)			32.5 mg
		RDX	98.5	
	Pep (primer mix mol #130*2)			42.5 mg
		Pb styphnate	40	
		Pb azide	20	
		Ba nitrate	20	
		Sb sulfide	15	
	Pep (output mix)			15 mg
		Pb azide	11	
		Zr	26	
		Pb Peroxide	60.3	
	Pep (input mix)			15 mg
		Pb styphnate	40	
		Pb azide	20	
		Ba nitrate	20	
		Sb sulfide	15	
	Pep (pb azide)	see B630		17 mg
	Pep (delay mix*1)			50 mg
		Ba chromate	86	
		B amorphous pwdr	14	
C226	**Ctg 81mm Illum M301 w/fuze time M84**			10.7 lb
	Pellet (black pwdr cl7)	see B630		1.65
	Pep (primer mix #70)	see B630		0.37
	Pep (primer mix #70) (alt)	see B630		48
	Pep (first fire comp)			0.8 oz
		Ba nitrate	50	
		Si	20	
		TNC	10	
		Zr hydride	15	
	Pep (Illuminant comp)			22

TABLE 4-1 (Continued)
PRINCIPAL COMPONENTS OF MUNITIONS

Table 4-1. Principal Components of Munitions				
DODAC	Type	Compound	%	Weight (GR)
		Mg pwdr	55	
		Na nitrate	36	
	Pep (black pwdr)	see B535		0.016 oz
	Prop M9	see B506		122
	Pep (black pwdr cl5)	see B535 cl7		75
	Pellet ign			92 mg
		K nitrate	70.7	
		Boron Amphorous	23.7	
	Pep (Primer Mix)			0.4
		K chlorate	37.05	
		Pb thiocyanate	38.13	
		Ground Galss	10.45	
	Pellet Ign	see above		87 mg
	Pellet ign	see above		75 mg
	Pep (fuze pwdr blend*1)			56
		K nitrate	72	
		S	13.2	
	Pellet ign	see above		115 mg
	Pep (fuze pwdr blend*1)	see above		49
	Prop M8	see B630		203.5
C236	**Ctg 81mm HE M374 w/o fuze**			9.34 lb
	Pellet (black pwdr cl7)	see B630		3.12
	Pep (primer mix #70)	see B630		48
	Prop M9	see B506		115
	Prop M9	see B506		184
	Prop M9	see B506		168
	Pep (comp B)	see B632		2.1 lb
	Pep (comp B4) (alt)	see B632		2.1 lb
	Pellet (black pwdr cl7)	see B630		3.12
	Pep (primer mix #70)	see B630		0.37
	Pep (primer mix #70) (alt)	see B630		48
	Prop M9	see B506		108
	Prop M9	see B506		184
	Prop M9	see B506		168
	Pep (comp B)	see B632		2.1 lb

TABLE 4-1 (Continued)
PRINCIPAL COMPONENTS OF MUNITIONS

Table 4-1. Principal Components of Munitions				
DODAC	Type	Compound	%	Weight (GR)
	Pep (comp B4) (alt)	see B632		2.1 lb
C256	**Ctg 81mm HE M374A3 w/fuze PD M567**			
	Pellet (black pwdr cl7)	see B630		3.12
	Prop M9	see B506		115
	Pep (primer mix #70)	see B630		0.37
	Pep (primer mix #70) (alt)	see B630		48
	Pep (primer mix k-75)			0.5
		Pb styphnate		
		Ba nitrate		
		Sb sulfide		
	Prop M10 flake			392
		NC	97.58	
	Container bottom			2.315 gm
		NC	78	
	Container top			2.315 gm
		NC	78	
	Closure			0.003
		NC	71	
		Fiber craft	10.75	
	Container bottom paper	Same as above		2.315
	Container top paper	Same as above		2.315
	Pep (comp B)	see B632		2.1 lb
	Pep (comp B4) (alt)	see B632		2.1 lb
	Pellet booster	see B632		23.374 gm
	Pep (comp A5)	see Pellet booster		2310 mg
	Pep (RDX)	see B632		140 mg
	Pep (RDX)	see B632		70 mg
	Pep (Pb azide)	see B630		82 mg
	Delay Comp			25 mg
		Ba chromate	86	
		B amorphous	14	
	Ign pwdr A1A			42 mg
		Zr pwdr	65	
		Fe oxide	25	
		diatomaceous	10	

TABLE 4-1 (Continued)
PRINCIPAL COMPONENTS OF MUNITIONS

Table 4-1. Principal Components of Munitions				
DODAC	Type	Compound	%	Weight (GR)
	Primer mix pa-100			32 mg
		K chlorate	53	
		Pb thiocyanate	25	
		Sb sulfide	17	
	Pep (RDX)	see B632		75 mg
	Pep (RDX) (alt)	see B632		75 mg
	Pep (Pb azide)	see B630		95 mg
	Pep (Pb azide) (alt)	see B630		95 mg
	Pep (primer mix nol #130*10)			15 mg
		Pb styphnate	40	
		Sb sulfide	15	
		Ba nitrate	20	
		Pb azide	20	
	Delay material			180 mg
		Ba chromate	52	
		K perchlorate	12.3	
		Zr-Ni Alloy	23	
	Delay material			63 mg
		Ba chromate	61.7	
		K perchlorate	12.3	
		Zr-Ni Alloy	23	
	Pyrotechnic mix			16 mg
		Pb styphnate	40	
		Red lead oxide	43.98	
		Silicon	11.01	
	Ign pwdr F33B			72 mg
		Zr pwdr	41	
		Fe oxide	49	
		Diatomaceous Earth	10	
	Pep (primer mix #70)	see B630		8.5 mg
C276	**Ctg 81mm smk wp M375 w/fuze**			9.34 lb
	Pellet (pellet expl comp)	see B630		11.7 gm
	Pep (RDX) (alt)	see B632		11.7 gm
	Pep (comp A5) (alt)	see B630		11.7 gm
	Prop M9	see B506		115

TABLE 4-1 (Continued)
PRINCIPAL COMPONENTS OF MUNITIONS

Table 4-1. Principal Components of Munitions				
DODAC	Type	Compound	%	Weight (GR)
	Pellet (black pwdr cl7)	see B630		3.12
	Pep (primer mix #70)	see B630		0.37
	Prop M9	see B506		184
	Prop M9	see B506		168
	Pep (RDX)	see B632		1.77
	Pep (RDX) (alt)	see B632		1.77
	Pep (Pb azide)	see B630		3.41
	Comp delay			32 mg
		Ba chromate		83
		B amorphous pwdr		16
	Pep (primer mix nol #130*11)	see C256		20 mg
	Pep (primer mix nol #130*12) (alt)	see C256		20 mg
	Pep (Pb azide)	see B630		1.43
	Pep (Pb azide) (alt)	see B630		1.43
	Pep (RDX)	see B632		1.9
	Pep (RDX) (alt)	see B632		1.9
	Pep (primer mix nol #130*14)	see C256		0.31
	Pep (RDX)	see B632		0.99
	Pep (RDX) (alt)	see B632		0.99
	Pep (Pb azide)	see B630		2
	Pep (RDX)	see B632		8.3
	Pep (RDX) (alt)	see B632		8.3
	Pep (comp A5) (alt)	see B630		8.3
	Pep (RDX)	see B632		0.37
	Pep (RDX) (alt)	see B632		0.37
	Pep (comp A5) (alt)	see B630		0.37
	Pellet booster	see B632		35.93
	Pellet booster (tetryl pellets) (alt)			35.93
		Tetryl	98	
C697	**Ctg 4.2in HE M329A2 w/o fuze**			22 lb
	Half increment (Prop M8)	see B630		122.9
	Half increment (Prop M8)	see B630		122.9
	Half increment (Prop M8)	see B630		614.5
	Prop M9	see B506		340
	Half increment (Prop M8)	see B630		614.5

TABLE 4-1 (Continued)
PRINCIPAL COMPONENTS OF MUNITIONS

Table 4-1. Principal Components of Munitions				
DODAC	Type	Compound	%	Weight (GR)
	Half increment (Prop M8)	see B630		122.9
	Pep (black pwdr)	see B535		170
	Primer (primer mix)			1
		Ba nitrate	42	
		Pb styphnate	40	
		Sb Sulfide	22	
	Pep (comp B (RDX cl A))	see B632		5.75 lb
	Pep (supp Charge comp)			0.30 lb
		TNT	98.5	
D445	**Canister 155mm smk hc M1**			7.35 lb
	Slug (starter mix)			0.5 lb
		Si	26	
		K nitrate	35	
		Fe oxide blk	22	
		Al pwdr	13	
	Wht smk mix 1			3.0 lb
		Hexachloroethane	44.53	
		Zn oxide	46.47	
	Impregnating mix 1			0.00 lb
		K nitrate	70.5	
		Charcoal	29.5	
D449	**Canister 155mm smk ylw M3**			4.81 lb
	Starter mix 3			30 gm
		K nitrate	70.5	
		Charcoal	29.5	
	Starter mix 2			30 gm
		Si	26	
		K nitrate	35	
		Fe oxide	22	
		Al pwdr	13	
	Yellow smk mix			1430.46 g
		K chlorate	26.5	
		Lactose technical	16	

TABLE 4-1 (Continued)
PRINCIPAL COMPONENTS OF MUNITIONS

Table 4-1. Principal Components of Munitions				
DODAC	Type	Compound	%	Weight (GR)
		Dye yellow	17.5	
		Dye benzanthrone	32	
	Impregnating mix 1	see 445		0.00 lb
D451	**Canister 155mm smk green M4**			2.77 lb
	Starter mix 3	see D445		30 gm
	Starter mix 2	see D445		30 gm
	Yellow smk mix	see D445		728.65 gm
	Impregnating mix 1	see D445		0.00 lb
D513	**Proj 155mm Prac M804**			94.6 lb
	Smoke mix (smoke mix SW-522)			195 gm
		Zn dust	40	
		K perchlorate	20	
		K nitrate	20	
		Al pwdr	20	
	Smoke mix (smoke mix SW-522)	see above		195 gm
D540	Chg. Prop 155mm GB M3A1			5.817 lb
	Prop M1			2 lb
		NC	83.34	
	Pep (CBI ign pwdr)			3.5 oz
		NC	98.2	
	Pep (K nitrate)			2 oz
		K nitrate	100	
	Pep (K sulfate) (alt)			2 oz
		K sulfate	100	
	Pep (Spi ign pwdr)			3 oz
		NC (N 13%)	94.95	
	Pep (K nitrate)	see above		2 oz
	Pep (K sulfate) (alt)	see above		2 oz
	Prop M1	see above		8 oz
	Prop M1	see above		10.5 oz
	Prop M1	see above		14.5 oz

TABLE 4-1 (Continued)
PRINCIPAL COMPONENTS OF MUNITIONS

Table 4-1. Principal Components of Munitions				
DODAC	Type	Compound	%	Weight (GR)
	Pep (K nitrate)	see above		1 oz
	Pep (K sulfate) (alt)	see above		1 oz
	Prop M1	see above		25 oz
	Pep (K nitrate)	see above		1 oz
	Pep (K sulfate) (alt)	see above		1 oz
G839	**Ctg 7.62mm Nato Gren Rifle M64**			241
	Case	Cu Alloy		190
		Cu	70	
		Zn	29.88	
	Prop WC830			45
		NC (N 13.15%)	73.17	
		Nitroglycerin	19	
	Prop Imr 8097 (alt)			40
		NC (N 13.15%)	95.68	
	Prop HPC 4 (alt)			37
		NC (N 13.25%)	74.85	
		Nitroglycerin	20	
	Pellet booster (primer comp Fa-956)			0.6
		Sb sulfide	15	
		Ba nitrate	32	
		Pb styphnate	37	
	Pellet (primer mix FA-1023)			0.58
		Sb sulfide	12	
		Ba nitrate	39	
		Pb styphnate	38	
G922	**Gren hand riot cs M47 w/fuze M227**			410 gm
	Riot mix CS			185 gm
		K chlorate	27	
		CS	40	
		Suger	18	
		Mg Carbonate	12	
	First fire mix 10			0.35 gm
		Si	25	

TABLE 4-1 (Continued)
PRINCIPAL COMPONENTS OF MUNITIONS

Table 4-1. Principal Components of Munitions				
DODAC	Type	Compound	%	Weight (GR)
		Pb red	50	
		Ti pwdr	25	
	Ign mix 3			0.30 gm
		Fe oxide	49.1	
		Ti pwdr	31.91	
		Zr	17.19	
	Delay mix 5			1.60 gm
		Si	20	
		Pb red	80	
	Primer mix nol #60			0.11 gm
		Pb styphnate	60	
		Sb sulfide	10	
		Ba nitrate	25	
G930	**Gren hand smk HC an-M8**			1.00 lb
	Wht smk mix 1	see D445		480 gm
	Slug (Starter mix)	see D445		19 gm
	Ign comp (mix KCLO4 30%)			15 gm
		Ti technical	69.5	
		K perchlorate	29.5	
	Pep (mixture Zr pwdr 65 %)			30 mg
		Zr pwdr	65	
		Fe oxide	25	
		Diatomaceous earth	10	
	Pep (Delay comp mix)			600 mg
		Mn pwdr	42	
		Pb chromate	53	
	Pep (primer mix)	see C226		0.4
G932	**Gren hand smk red M48 w/M227 fuze**			1.19 lb
	Red smk mix			165 gm
		Dye red	63.6	
		K chlorate	24.7	
	Firse fire mix 10	see G922		0.35 gm
	Ign mix 3	see G922		

TABLE 4-1 (Continued)
PRINCIPAL COMPONENTS OF MUNITIONS

Table 4-1. Principal Components of Munitions

DODAC	Type	Compound	%	Weight (GR)
	Delay mix 5	see G922		
	Primer mix nol #60	see G922		
G940	**Gren hand smk Grn M18**			19 oz
	Dye smoke VII (smk mix grn)			11.5 oz
		Dye Green	42	
		Na bicarbonate	24	
		K chlorate	25	
	Starter mixture (mix KNO3 49.1 %)			7.00 gm
		Si	36.4	
		K nitrate	49.1	
	Starter mixture (mix KNO3 25.9 %) (alt)			190
		K chlorate	25.9	
		S	10.1	
		Na bicarbonate	18	
	Ign Comp (mix kclo4 30%)	see G930		15 mg
	Pep (mixture Zr pwdr 65%)	see G930		30 mg
	Pep (delay comp mix)	see G930		600 mg
	Pep (primer mix)	see C226		0.4
G945	**Gren hand smk ylw M18**			19 oz
	Ylw smk XII (smk mix Ylw)			11.5 oz
		Dye ylw	42	
		Na bicarbonate	24	
		K chlorate	25	
	Starter mixture (mix kno3)	see G940		7.00 gm
	Starter mix (mix KNO3) (alt)	see G940		190
	Ign comp (mix kclo4 30%)	see G930		15 mg
	Pep (mixture Zr pwdr 65%)	see G930		30 mg
	Pep (delay comp mix)	see G930		600 mg
	Pep (primer mix)	see C226		0.4
G950	**Gren hand smk red M18**			19 oz
	Red smk III (smk mix red)			11.5 oz

TABLE 4-1 (Continued)
PRINCIPAL COMPONENTS OF MUNITIONS

Table 4-1. Principal Components of Munitions				
DODAC	Type	Compound	%	Weight (GR)
		Dye red	42	
		Na bicarbonate	24	
		K chlorate	25	
	Starter mixture (mix kno3)	see G940		7.00 gm
	Starter mix (mix KNO3) (alt)	see G940		190
	Ign comp (mix kclo4 30%)	see G930		15 mg
	Pep (mixture Zr pwdr 65%)	see G930		30 mg
	Pep (delay comp mix)	see G930		600 mg
	Pep (primer mix)	see C226		0.4
G955	**gren hand smk vio M18**			19 oz
	Violet smk IV (smk mix violet)			11.5 oz
		Dye violet	42	
		Na bicarbonate	24	
		K chlorate	25	
	Starter mixture (mix kno3)	see G940		7.00 gm
	Starter mix (mix KNO3) (alt)	see G940		190
	Ign comp (mix kclo4 30%)	see G930		15 mg
	Pep (mixture Zr pwdr 65%)	see G930		30 mg
	Pep (delay comp mix)	see G930		600 mg
	Pep (primer mix)	see C226		0.4
G963	**Gren hand riot CS**			15.5 oz
	Pellet CS sugar Cated			4.5 oz
		CS	81.1	
		Sugar	16.5	
	Fuel mix 6			7.35 oz
		K chlorate	40.96	
		Sugar	27.3	
		Mg carbonate	29.26	
	Starter mix 12			1.5 oz
		K nitrate	67.68	
		Charcoal	28.32	
	Ign comp (mix kclo4 30%)	see G930		15 mg
	Pep (delay comp mix)	see G930		600 mg

TABLE 4-1 (Continued)
PRINCIPAL COMPONENTS OF MUNITIONS

Table 4-1. Principal Components of Munitions				
DODAC	Type	Compound	%	Weight (GR)
	Ign pwdr A1A	see C256		30 mg
	Pep (primer mix)	see C226		0.4
K058	**fuze mine M605**			0.38 lb
	Pep (balck pdwr cl5)	see B535 cl7		648 mg
	Pep (delay comp (Ba Cr 60 %))			475 mg
		Ba chromate	60	
		K perchlorate	14	
		Zr-Nickel Alloy pow	17	
	Pep (primer mix PA-101)	see B506		0.33
	Pep (primer mix #793) (alt)	see B506		0.33
	Pep (primer mix #5086) (alt)	see B506		0.33
K145	**Mine apers M18A1 w/accessories**			0
	Pep (comp C4)			1.5 lb
		RDX	22.6	
		RDX	67.9	
	Pep (RDX)	see B630		14.5
	Pep (Pb azide)	see B630		270 mg
	Pep (ign chg)			1.5
		K chlorate	25	
		Pwdr smokeless	50	
		Pb salt-dnoc	25	
L306	**Signal illum grnd M158**			1.11 lb
	Pep (balck pwdr cl5)	see B535 cl7		710 mg
	Pep (balck pwdr cl5)	see B535 cl7		750 mg
	Pep (flash comp)			90 mg
		Zr	58	
		Cr oxide	16	
		Mo trioxide	25	
	Pep (ign comp mix) (alt)	see B535		80 mg
	Pep (black pwdr cl7) (alt)	see B535		140 mg
	Pep (delay comp)			570 mg

TABLE 4-1 (Continued)
PRINCIPAL COMPONENTS OF MUNITIONS

Table 4-1. Principal Components of Munitions				
DODAC	Type	Compound	%	Weight (GR)
		K perchlorate	11.4	
		Ba chromate	56.3	
		W	32	
	Pep (red star comp)			0.5 oz
		Polyvinyl chloride	15	
		Mg	33	
		Sr nitrate	48	
	Pep (first fire comp)	see C226		
	Pep (quickmatch mix)			2
		K nitrate	74	
		charcoal	15.6	
		S	10.4	
	Grain drop (black pwdr mix)			13 gm
		K nitrate	67.4	
		Charcoal	14.2	
	Pep (Primer mix #955)			0.9
		Pb styphnate	40	
		Ba nitrate	30	
		Sb sulfide	15	
L307	**Signal illum grne M159**			1.11 lb
	Pep (balck pwdr cl5)	see B535 cl7		750 mg
	Pep (balck pwdr cl5)	see B535 cl7		750 mg
	Pep (flash comp)	see L306		90 mg
	Pep (ign comp mix) (alt)	see B535		80 mg
	Pep (black pwdr cl7) (alt)	see B535		140 mg
	Pep (delay comp)	see L306		570 mg
	Pep (illum comp wht)			0.75 oz
		Mg	29.5	
		Ba nitrate	49	
		Sr nitrate	16.5	
	Pep (Illum comp wht) (alt)	same as above		0.75 oz
	Pep (first firs comp)	see C226		2
	Pep (quickmatch mix)	see L306		2
	Grain drop (black pwdr mix)	see L306		13 gm
	Pep (Primer mix #955)	see L306		0.9

TABLE 4-1 (Continued)
PRINCIPAL COMPONENTS OF MUNITIONS

Table 4-1. Principal Components of Munitions				
DODAC	Type	Compound	%	Weight (GR)
L311	**Signal Illum grnd red star para M126**			1.20 lb
	Grain Drop (black pwdr mix)	see L306		13 gm
	Pep (flash comp)	see L306		90 mg
	Pep (ign comp mix) (alt)	see B535		80 mg
	Pep (black pwdr cl7) (alt)	see B535		140 mg
	Pep (delay comp)	see L306		570 mg
	Pep (Primer mix #955)	see L306		0.9
	Pep (illum comp 1*1)			90 mg
		Mg pwdr	66	
		Na nitrate	29	
	Pep (first fire comp)	see C226		87.14
	Pep (quickmatch mix)	see L306		4.07
L312	**Signal illum grnd M127**			
	Pep (balck pwdr cl5)	see B535 cl7		1460 mg
	Grain Drop (black pwdr mix)	see L306		13 gm
	Pep (flash comp)	see L306		90 mg
	Pep (ign comp mix) (alt)	see B535		80 mg
	Pep (black pwdr cl7) (alt)	see B535		140 mg
	Pep (delay comp)	see L306		570 mg
	Pep (first fire comp)	see C226		2
	Pep (illum comp 1*1)	see L311		85 gm
	Pep (illum comp 1*2) (alt)	same as 1*1 above		85 gm
	Pep (illum comp 2*1)			85 gm
		Mg pwdr	65	
		Na nitrate	31	
	Pep (illum comp 2*2) (alt)	same as 2*1 above		85 gm
	Pep (quickmatch mix)	see L306		4.07
	Pep (Primer mix #955)	see L306		0.9
L314	**Signal Illum grnd M125A1**			1.11 lb
	Pep (balck pwdr cl5)	see B535 cl7		750 mg
	Pep (balck pwdr cl5)	see B535 cl7		750 mg

TABLE 4-1 (Continued)
PRINCIPAL COMPONENTS OF MUNITIONS

Table 4-1. Principal Components of Munitions

DODAC	Type	Compound	%	Weight (GR)
	Pep (flash comp)	see L306		90 mg
	Pep (ign comp mix) (alt)	see B535		80 mg
	Pep (black pwdr cl7) (alt)	see B535		140 mg
	Pep (delay comp)	see L306		570 mg
	Pep (illum comp grn)			0.5 oz
		Mg	33	
		Ba nitrate	46	
		Polyvinyl	16	
	Pep (illum comp grn) (alt)	same as above		0.5 oz
	Pep (first fire comp)	see C226		2
	Pep (quickmatch mix)	see L306		2
	Grain Drop (black pwdr mix)	see L306		13 gm
	Pep (Primer mix #955)	see L306		0.9
L594	**Simulator proj grnd burst M115A2**			0.30 lb
	Pep (primer paste)			0.2
		k Nitrate	66.6	
		Charcoal	14.04	
		Binder cell nitrate	10	
	Pep (flash comp)			2.3 oz
		Al pwdr	42.5	
		K perchlorate	57.5	
	Pep (whistle comp)			2.00 gm
		K perchlorate	69	
		Na salcylate	28	
	Pep (quickmatch mix)	see L306		4.07
	Pep (black pwdr)	see B535 cl7		0.5
	Pep (ign chg)			41 mg
		K chlorate	88	
		Charcoal	10	
	Friction comp			1.4
		Phosphorus red	21.4	
		Shellac	78.6	
L599	**simulator booby trap M118 illum**			0.14 lb

TABLE 4-1 (Continued)
PRINCIPAL COMPONENTS OF MUNITIONS

Table 4-1. Principal Components of Munitions				
DODAC	Type	Compound	%	Weight (GR)
	Pep (black pwdr)	see B535 cl7		2.25
	Pep (black pwdr)	see B535 cl7		70 mg
	Pep (starter paste)			19.4
		Binder cell nitrate	15	
		K nitrate	62.9	
		Charcoal	13.26	
	Pep (matchhead comp)			9.56
		Red phosphorus	53	
		Sb sulfide	42	
	Flare comp			5.00 gm
		K perchlorate	80	
		Red gum	14	
	Pep (black pwdr)	see B535 cl7		8.14
L600	**simulator booby trap M119 whistle**			0.15 lb
	Pep (black pwdr)	see B535 cl7		2.25
	Pep (starter paste) (alt)	see L599		2.25
	Pep (whistle comp)	see L594		3.5 gm
	Pep (matchhead comp)	see L599		9.56
	Pep (quickmatch mix)	see L306		4.07
	Pep (scratch comp)			19.17
		K chlorate	52	
		Sb sulfide	31	
		Dextrin	17	
L601	**Simulator hand gren M116A1**			
	Pep (primer paste)	see L594		0.2
	Chg photoflash			1.3 oz
		Mg pwdr	34	
		K perchlorate	40	
		Al pwdr	26	
	Pep (black pwdr)	see B535 cl7		0.5
	Pep (ign chg)	see L594		41 mg
	Friction comp	see L594		1.4

TABLE 4-1 (Continued)
PRINCIPAL COMPONENTS OF MUNITIONS

Table 4-1. Principal Components of Munitions				
DODAC	Type	Compound	%	Weight (GR)
M023	**Chg demo M1112**			1.26 lb
	Comp C-4			1.25 lb
		RDX	91	
M032	**Chg demo block tnt 1lb**			1.06 lb
	Chg 1lb block (tnt)			1.00 lb
		TNT	100	
	Chg 1lb block (tnt pellet) (alt)			1.00 lb
		TNT	98.25	
M103	**Cap blasting #3 delay elect**			0
	Pep (base chg)			13.5
		Petn	100	
	Pep (base chg) (alt)			13.5
		RDX	100	
	Pep (primary chg)			0
		Pb azide	100	
M130	**Cap blasting electric M6**			0.07 lb
	Pep (RDX)	see B630		14.5
	Pep (Pb azide)	see B630		270 mg
	Pep (chg intermediate) (alt)			270 mg
		Pb azide	99.5	
	Pep (ign chg)	see K145		1.8
M131	**Cap blasting non elec M7**			28
	Pep (RDX)	see B630		14.5
	Pep (Pb azide)	see B630		3.7
	Pep (Pb styphnate)			1.1
		Pb styphnate	100	
	Pep (chg ign) (alt)			1.1
		Pb azide	60	

TABLE 4-1 (Continued)
PRINCIPAL COMPONENTS OF MUNITIONS

Table 4-1. Principal Components of Munitions				
DODAC	Type	Compound	%	Weight (GR)
		Pb styphnate	40	
M456	Cord detonating			88 lb
	Pep (petn)			0.01 lb
		Petn	100	
M582	Fuze MTSQ			
	Pep (primer mix nol #130*10)			23 mg
		Pb styphnate	40	
		Sb sulfide	15	
		Ba nitrate	20	
		Pb azide	20	
	Pep (Pb Azide)	see B630		75 mg
	Pep (RDX pellet)	see B630		70 mg
	Pep (RDX) (alt)	see B630		70 mg
M591	Military dynamite M1			0.39 lb
	Dynamite			0.37 lb
		RDX	73	
		TNT	15	
	Dynamite (alt)	same as above		0.37 lb
M670	Fuse blasting time M700			68 lb
	Pep (black pwdr (special))			0
		K nitrate	71	
		S	13	
		Charcoal	16	
M766	Ign time blasting M60			0
	Pep (primer mix)	see C226		0.4
	Pep (primer mix #955)	see L306		0.48

TABLE 4-1 (Continued)
PRINCIPAL COMPONENTS OF MUNITIONS

Table 4-1. Principal Components of Munitions

DODAC	Type	Compound	%	Weight (GR)
N286	**Fuze MTSQ M582**			1.51 lb
	Pellet booster	see B632		23.264 gm
	Pep (primer mix nol #130)*9	see M582		0.23
	Pep (Pb azide)	see B630		0.79
	Pep (RDX)	see B630		0.29
	Pep (primer mix nol #130)*4 (alt)	see M582		15 mg
	Pep (primer mix nol #130)*5 (alt)	see M582		15 mg
N335	**Fuze PD M557**			2.12 lb
	Pellet booster (Tetryl 98%)	see B632		0.71
	Pep (Pb azide)	see B630		4.08
	Pep (Tetryl)	see B630		1.23
	Pep (chg tetryl)			3.78
		Tetryl	98	
	Pep (primer mix kclo3)			0.86
		K chlorate	33.4	
		Sb sulfide	33.3	
		Pb azide	28.3	
	Pep (primer mix #70)	see B630		0.17
	Pep (black pwdr)	see B535 cl7		0.32
	Pep (Pb azide)	see B630		1.43
N402	**Fuze Prox M532**			1.28 lb
	Ign pwdr			0.0634
		Phouphous	51	
		Butyrate dope	32	
	Primer pwdr			99.5
		Charcoal	11	
		K chlorate	87	
	Pep (chg mix) (petn 99.5)			65 mg
		Petn	99.5	
	Pep (Pb azide)	see B630		65 mg
	Spot chg			5 mg
		N-amyl alcohol	23.02	

TABLE 4-1 (Continued)
PRINCIPAL COMPONENTS OF MUNITIONS

Table 4-1. Principal Components of Munitions

DODAC	Type	Compound	%	Weight (GR)
		Pb styphnate	59.92	
N464	**Fuze prox M732**			1.75 lb
	Pellet booster	see B632		5.85 gm
	Pep (HMX)	see B642		16 mg
	Pep (Pb azide)	see B630		14 mg
	Spot chg	see N402		1.6 mg
	Pep (PBXN-5)			110 mg
		HMX	95	
	Pep (priming mix)	see N335 kclo3		25 mg
	Pep (HMX)	see B642		110 mg
	Pep (Pb azide)	see B630		70 mg
N523	**Primer Perc M82**			
	Pellet booster	see B632		0.6
	Pep (primer mix k-75)			0.557
		Pb styphnate	39	
		Ba nitrate	41	
		Sb sulfide	19	
	Pep (black pwdr)	see B535 cl7		1.36
N525	**Primer Perc MK2A4**			0.06 lb
	Pep (black pwdr)	see B535 cl7		19
	Pellet booster	see B632		0.6
	Pellet (primer comp FA-961)			0.6
		Pb styphnate	36	
		Ba nitrate	29	
	Pep (primer mix k-75)	see N523		0.44
	Pep (primer mix #5061) (alt)			0.56
		Pb styphnate	38	
		Ba nitrate	43	
	Pep (primer mix #5074) (alt)			0.56
		Pb styphnate	38	
		Ba nitrate	39	

TABLE 4-1 (Continued)
PRINCIPAL COMPONENTS OF MUNITIONS

Table 4-1. Principal Components of Munitions

DODAC	Type	Compound	%	Weight (GR)
		Sb sulfide	12	
	Pep (primer mix #257w) (alt)			0.61
		Ba nitrate	33	
		Sb sulfide	13	
		Pb styphnate norma	38	
	Pep (primer mix #304) (alt)			0.5
		Pb styphnate	41	
		Ba nitrate	36	
	Pep (primer mix #5061 (dry)) (alt)	see above		0.55
	Pep (primer mix #5061w) (alt)	see above		0.55

TABLE 4-2:
LISTING OF UNIQUE COMPONENTS FROM TABLE 4-1

Al Powder	NC (N 13.13)
B amorphous Pwdr	NC (N 13.15%)
Ba chromate	NC (N 13.25%)
Ba nitrate	Nitroglycerin
Ba Peroxide	Pb azide
Binder cell nitrate	Pb chromate
Boron	Pb Peroxide
Brass	Pb red
Butyrate dope	Pb salt-dnoc
Ca silicide	Pb Sb
Charcoal	Pb Styphnate
Cr Oxide	Pb styphnate normal
CS*	Pb thiocyanate
Cu	Petn
Cu Alloy	Phosphorus red
Cu Alloy Clad Steel	Phosphorus
Cu Plated Steel	Polyvinyl
Dextrin	Polyvinyl chloride
Diatomaceous Earth	Ptfe*
Dye benzanthrone	Pwdr metal
Dye Disperse Red	Pwdr mtl ellipsoidal
Dye Green	Pwdr smokeless
Dye red	RDX
Dye solvent grn 3	Red gum
Dye violet	Red lead oxide
Dye yellow	Resin polyester
Dye yellow 4	S
Fe oxide	Sb Sulfide
Fe oxide blk	Shellac
Fiber craft	Si
formaldehyde/melamin	Silicon
Ground Glass	Sr Nitrate
Hexachloroethane	Sr Nitrate Anhydrous
HMX	Sr Peroxide
K chlorate	Steel
K nitrate	Sugar
K perchlorate	Tetranitrocarbazole
K sulfate	Tetryl

TABLE 4-1:
PRINCIPAL COMPONENTS OF MUNITIONS

	Table 4-1. Principal Components of Munitions			
DODAC	Type	Compound	%	Weight (GR)
A066	**Ctg. 5.56mm Ball M193**			182.00
	Case	Cu Alloy		95.00
	Prop WC844	NC (N 13.15)	83.22	28.50
		Nitroglycerin	10.00	
	Prop CMR 170	NC (N 13.15)	88.95	25.80
	Primer #41			4.00
		Sb Sulfide		15.00
		Pb Styphnate		37.00
	Bullet M193			56.00
		Cu Alloy		17.50
		Pb Sb		38.50
A068	**Ctg. 5.56mm Tracer M196**			177.00
	Case	Cu Alloy		95.00
	Prop IMR 8208-M			25.30
		NC (N 13.15)	93.17	
	Prop WC844 (ALT)	Same as A066		
	Prop CMR 170 (ALT)	Same as A066		
	Primer #41	Same as A066		
A071	**Ctg. 5.56mm M193**	Same as A066		
A080	**Ctg. 5.56mm Blk M200**			109
	Case	Cu Alloy		98.1
	Prop HPC13			7
		NC (N 13.25)	66.1	
		Nitroglycerin	28.5	
	Prop WC814 (ALT)			7
		NC (N13.15)	84.1	
		Nitroglycerin	13	
	Primer #41	Same as A066		
A111	**Ctg. 7.62mm Blk M82**			234.5

TABLE 4-1 (Continued)
PRINCIPAL COMPONENTS OF MUNITIONS

	Table 4-1. Principal Components of Munitions			
DODAC	Type	Compound	%	Weight (GR)
	Case	Cu Alloy		213
	Prop WC818			16
		NC (N13.15)	87.95	
	Primer Perc #34			5.43
		Sb Sulfide	15	
		Ba Nitrate	32	
		Pb Styphnate	37	
A130	**Ctg. 7.62mm Nato Ball M80**			370
	Case	Cu Alloy		170
	Prop WC846			46
		NC (N13.15)	82.97	
	Bullet M80			149
		Cu Alloy Clad Steel		
		Pb Sb		
	Primer Rerc #34	Same as A111		
A131	Ctg. 7.62mm 4 Ball M59/M80/1 Tr M62 Lnkd			393
	Case	Cu Alloy		190
	Prop WC846	Same as A130		
	Prop IMR 4475 (ALT)			41
		NC (N13.15)	90.18	
	Primer Rerc #34	Same as A111		
	Bullet			150.5
	Jacket	Brass		57
	Core	Steel		55
	Filler Point	Pb Sb		24
	Filler Base	Pb Sb		24.5
	Ctg. 7.62mm Nato Ball M80 (ALT)			370
	Case	Cu Alloy		170
	Prop WC846	Same as A130		
	Primer Rerc #34	Same as A111		

TABLE 4-1 (Continued)
PRINCIPAL COMPONENTS OF MUNITIONS

	Table 4-1. Principal Components of Munitions			
DODAC	Type	Compound	%	Weight (GR)
	Bullet M80			149
	Jacket	Cu Alloy Clad Steel		34.5
	Slug	Pb Sb		114
	Ctg. 7.62mm Tr M62			383
	Case	Cu Alloy		190
		Cu	70	
		Zn	29.88	
	Prop Type II			47
		NC	89.3	
	Primer Perc #36			5.3
		Pb Styphnate	36	
		Ba Nitrate	29	
	Bullet M62			146
	Jacket	Cu Alloy Clad Steel		60
	Filler Point	Pb Sb		72
A136	**Ctg. 7.62mm Nato Spec Ball M118**			390
	Case	Cu Alloy		170
	Prop WC750			42
		NC (N 13.1)	80.65	
		Nitroglycerin	10.25	
	Prop IMR 4895 (ALT)			42
		NC (N 13.15)	91.18	
	Prop WC846	Same as A130		
	Bullet			172.9
	Slug			114.2
	Jacket			58.7
A143	**Ctg. 7.62mm Nato Ball M80 Lnkd**			370
	Case	Same as A136		
	Prop WC846	Same as A130		
	Bullet M80	Same as A131		

TABLE 4-1 (Continued)
PRINCIPAL COMPONENTS OF MUNITIONS

Table 4-1. Principal Components of Munitions				
DODAC	Type	Compound	%	Weight (GR)
	Primer Perc #34	Same as A111		
A363	**Ctg. 9mm Ball M882**			179
	Prop HPC 33			5.2
		NC (N 13.13)	85.45	
	Prop WPR280 (ALT)			5.2
		NC (N 13.1)	78.68	
		Nitroglycerin	15	
	Bullet Ball 9mm			124
	Jacket			23
	Slug			101
A400	**Ctg. Cal. 38 spec Ball M41**			203
	Case	Cu Alloy		63.5
	Prop SR7325			4.8
		NC (N 13.15)	98.52	
	Prop HPC 1 (ALT)			4.8
		NC (N 13.25)	58.85	
		Nitroglycerin	38.75	
	Primer Perc 108M			3
		Pb Styphnate	40	
		Sb Sulfide	16	
		Ba Nitrate	30	
	Primer Perc #49 (ALT)			3
		Pb Styphnate	38	
		Ba Nitrate	43	
	Primer Perc #100 (ALT)			3
		Pb Styphnate	39	
		Sb Sulfide	19	
		Ba Nitrate	41	
	Primer Perc #500 (ALT)			3
		Pb Styphnate	30	
		Sb Sulfide	14	
		Ba Nitrate	43	
	Bullet M41			132

TABLE 4-1 (Continued)
PRINCIPAL COMPONENTS OF MUNITIONS

	Table 4-1. Principal Components of Munitions			
DODAC	Type	Compound	%	Weight (GR)
	Slug	Pb Sb		109
	Jacket	Cu Alloy		23
A475	**Ctg Cal .45 Ball M1911**			331
	Case	Cu Alloy		93
	Prop SR7970			5
		NC (N 13.15)	96.24	
	Prop HPC 18 (ALT)			5
		NC (N 13.15)	76.95	
		Nitroglycerin	20	
	Primer Perc 111M			5
		Pb Styphnate	37	
		Sb Sulfide	19	
		Ba Nitrate	29	
	Primer Perc #150 (ALT)			5
		Pb Styphnate	39	
		Sb Sulfide	19	
		Ba Nitrate	41	
	Primer Perc #73 (ALT)			5
		Pb Styphnate	38	
		Ba Nitrate	43	
	Bullet M1911			234
	Slug	Pb Sb		197
	Jacket	Cu Alloy Clad Steel		34
	Jacket (Alt)	Cu Plated Steel		34
A483	**Ctg. Cal .45 Ball Match M1911**			334
	Case	Same as A475		
	Prop SR7970	Same as A475		
	Prop HPC 18 (ALT)	Same as A475		
	Primer Perc 111M	Same as A475		
	Primer Perc #150 (ALT)	Same as A475		
	Primer Perc #73 (ALT)	Same as A475		
	Bullet			234
	Slug	Pb Sb		197

TABLE 4-1 (Continued)
PRINCIPAL COMPONENTS OF MUNITIONS

Table 4-1. Principal Components of Munitions				
DODAC	Type	Compound	%	Weight (GR)
	Jacket	Cu Alloy		37
A555	**Ctg. Cal. .50 Ball M2 Lnkd**			1813
	Case	Brass		870
	Prop WC860			235
		NC (N 13.15)	78.67	
	Primer Perc #50M			18.5
		Ba Nitrate	43	
		Pb Styphnate	38	
	Primer Perc #315 (ALT)			
		Ba Nitrate	41	
		Pb Styphnate	39	
		Sb Sulfide	19	
	Primer Perc #35 (ALT)			18.5
		Ba Nitrate	39	
		Pb Styphnate	28	
		Sb Sulfide	12	
		Al Powder	10	
	Primer Perc #257 (ALT)			18.5
		Ba Nitrate	33	
		Pb Styphnate	36	
		Sb Sulfide	13	
	Bullet			709
	Core	Steel		400
	Jacket	Cu Alloy		253
	Point Filler	Pb Sb		56.5
A557	**Ctg. Cal. .50 4 Ball M33/1 Tr M17 Lnkd M9**			1737
	Case	Brass		870
	Prop IMR 5010			225
		NC (N 13.15)	89.92	
	Primer Perc #50M	Same as A555		
	Primer Perc #315 (ALT)	Same as A555		
	Primer Perc #257 (ALT)	Same as A555		
	Primer Perc #35 (ALT)	Same as A555		

TABLE 4-1 (Continued)
PRINCIPAL COMPONENTS OF MUNITIONS

	Table 4-1. Principal Components of Munitions			
DODAC	Type	Compound	%	Weight (GR)
	Bullet M17			615
	Jacket	Brass		235
	Core	Steel		352
	Pep (Ign Comp I-280*2)			0.2428
		Mg Powder	15	
		Sr Peroxide	76.5	
	Pep (Tracer Comp R-256*5)			0.8571
		Mg Powder	20.7	
		Sr Peroxide	26.7	
		Sr Nitrate	33.3	
	Bullet M17 (ALT)			643
	Jacket	Cu Alloy Clad Steel		365
	Slug	Pb Sb		207
	Pep(Ign Comp I-508)			11
		Ba Peroxide	79.2	
		Mg Powder	14.18	
	Pep(Ign Comp I-276)(ALT)			11
		Ba Peroxide	81.94	
		Mg Powder	15	
	Pep(Tracer Comp R-256*5)	Same as above		15
	Pep(Tracer Comp R-321)			40
		Polyvinyl Chloride	16	
		Sr Nitrate Anhydrou	52	
		Mg Powder	26	
	Pep(Tracer Comp R-284) (ALT)			40
		Polyvinyl Chloride	17	
		Sr Nitrate	55	
		Mg Powder	28	
	Ctg. Cal .50 Ball M33			1782
	Prop WC860	see A555		233
	Prop IMR 5010 (ALT)	see A557		233
	Case	Brass		870
	Bullet M33			661
	Jacket	Brass		235
	Filler Point	Na Carebonate Monohydrate		15

TABLE 4-1 (Continued)
PRINCIPAL COMPONENTS OF MUNITIONS

Table 4-1. Principal Components of Munitions				
DODAC	Type	Compound	%	Weight (GR)
	Primer Perc #50M	see A555		18.5
	Primer Perc #257 (ALT)	see A555		18.5
	Primer Perc #35 (ALT)	see A555		18.5
	Primer Perc #315 (ALT)	see A555		18.5
A598	**Ctg. Cal .50 Blk M1A1 Lnkd**			940
	Case	Brass		870
	Prop Hi Skor 700X			44.6
		NC	67.4	
		Nitroglycerin	30	
	Prop WC440S (ALT)			44.6
		NC (N 13.10)	75.69	
		Nitroglycerin	17	
	Primer Perc #50M	see A555		18.5
	Primer Perc #35 (ALT)	see A555		18.5
	Primer Perc #257 (ALT)	see A555		18.5
	Primer Perc #315 (ALT)	see A555		18.5
B506	**Ctg. 40mm Red Smk M713**			0.49 (lb)
	Fuze Output Comp			175 gm
		Boron	18.7	
		Ba Chromate	37.4	
		K Nitrate	33.7	
	Fuze Delay Comp			1100 gm
		Boron	11.7	
		Ba Chromate	29	
		Cr Oxide	59.3	
	Fuze 1st Fire Comp			220 gm
		Boron	18	
		Ba Chromate	81	
	Pyro Comp Red Smk			74.1 gm
		Suger	16.4	
		K Chlorate	26.3	
		Dye Disperse Red	43.7	
	Pyro comp Red Smk (ALT)			74.1 gm

TABLE 4-1 (Continued)
PRINCIPAL COMPONENTS OF MUNITIONS

Table 4-1. Principal Components of Munitions				
DODAC	Type	Compound	%	Weight (GR)
		Na bicarbonate	16.4	
		K Chlorate	25.6	
		Dye Disperse Red	40.6	
	Prop M9			320 gm
		NC	57.52	
		Nitroglycerin	39.84	
	Primer Perc Assy M42 (alt)			5
	Pep (primer mix pa-101)			0.33
		Pb Styphnate	53	
		Sb sulfide	10	
		Ba Nitrate	22	
		Al Powder	10	
	Pep (primer mix #793)(alt)			0.33
		Sb sulfide	30	
		Ca silicide	15	
		K chlorate	35	
		Pb thiocyanate	17	
	Pep (primer mix #5086)(alt)			0.33
		Sb sulfide	20	
		Pb Styphnate	26	
		Ca silicide	10.5	
		Ba Nitrate	41.5	
B508	**Ctg 40mm Grn Smk M715**			0.49 lb
	Fuze Output Comp	see B506		175 mg
	Fuze Delay Comp	see B506		1100 mg
	Fuze 1st Fire Comp	see B506		220 gm
	Pyro Comp Red Smk	see B506		74.1 gm
		Na Bicarbonate	13.3	
		S	10.2	
		K chlorate	26	
		Dye solvent grn 3	35.6	
	Prop M9	see B506		330 mg
	Pep (primer mix pa-101)	see B506		0.33
	Pep (primer mix #793)(alt)	see B506		0.33
	Pep (primer mix #5086)(alt)	see B506		0.33

TABLE 4-1 (Continued)
PRINCIPAL COMPONENTS OF MUNITIONS

Table 4-1. Principal Components of Munitions				
DODAC	Type	Compound	%	Weight (GR)
B509	**Ctg. 40mm Ylw Smk M716**			0.49 lb
	Fuze Output Comp	see B506		175 mg
	Fuze Delay Comp	see B506		1100 mg
	Fuze 1st Fire Comp	see B506		220 gm
	Smk mix ylw comp			
		Na Bicarbonate	13.4	
		S	10.2	
		K chlorate	26	
		Dye yellow 4	40.6	
	Prop M9	see B506		330 mg
	Pep (primer mix pa-101)	see B506		0.33
	Pep (primer mix #793)(alt)	see B506		0.33
	Pep (primer mix #5086)(alt)	see B506		0.33
B519	**Ctg 40mm Trace M781**			205 gm
	dye signal			5.4 gm
		formaldehyde/mela	89.48	
	Prop M9	see B506		330 mg
	Pep (primer mix pa-101)	see B506		0.33
	Pep (primer mix #793)(alt)	see B506		0.33
	Pep (primer mix #5086)(alt)	see B506		0.33
B535	**Ctg 40 mm white star para M583A1**			.44 lb
	Prop M9	see B506		330 mg
	Pep (primer mix pa-101)	see B506		0.33
	Pep (primer mix #793)(alt)	see B506		0.33
	Pep (primer mix #5086)(alt)	see B506		0.33
	Pep (delay comp)			740 mg
		Ba chromate	33	
		K perchlorate	33	
		W	33	
	Pep (ign comp mix)			280 mg
		B amorphous Pwdr	25	

TABLE 4-1 (Continued)
PRINCIPAL COMPONENTS OF MUNITIONS

	Table 4-1. Principal Components of Munitions			
DODAC	Type	Compound	%	Weight (GR)
		K perchlorate	75	
	Pep (black pwdr cl7) (alt)			280 gm
		K nitrate	74	
		S	10.4	
		Charcoal	15.6	
	Pep(illum comp)			80 gm
		Resin polyester	10.88	
		Pwdr mtl ellipsoidal	20	
		Na nitrate	41	
		Pwdr metal	28	
	Pep (ign comp)			3 gm
		B amorphous pwdr	19	
		Ptfe	18	
		K nitrate	58	
	Pep (Black pwdr cl1*1)			1 gm
		K nitrate	74	
		S	10.4	
		Charcoal	15.6	
	Pep (Pyro 1st fire comp ylw)			5 gm
		Ba nitrate	50	
		Tetranitrocarbazole	10	
		Si	20	
		Zr hydride	15	
B630	**Ctg 60mm smk M302A1**			4.1 lb
	Pellet (pellet expl comp)			7.5 gm
		RDX	98.5	
	Pep (comp A5) (alt)			7.5 gm
		RDX	98.5	
	Prop M9	see B506		40
	Pellet (Black pwdr cl7)	see B535 (pep black pwdr cl7)		1.65
	Pep (primer mix #70)			0.37
		Pb thiocyanate	25	
		K chlorate	53	
		Sb sulfide	17	
	Pep (primer mix #70) (alt)			0.48

TABLE 4-1 (Continued)
PRINCIPAL COMPONENTS OF MUNITIONS

Table 4-1. Principal Components of Munitions

DODAC	Type	Compound	%	Weight (GR)
		Pb thiocyanate	22.5	
		K chlorate	50.5	
		Sb sulfide	14.5	
		ground galss	10	
	Flake square (prop M8)			55
		Nitroglycerin	43	
		NC	52.15	
	Pep (comp A5)	see above		650 mg
	Pep (tetryl)			0.28 gm
		tetryl	100	
	Pep (primer mix*2)			0.92
		Pb styphnate	40	
		Sb sulfide	15	
		Ba nitrate	20	
		Pb azide	20	
	Pep (primer mix*3)(alt)			0.92
		Pb styphnate	40	
		Sb sulfide	15	
		Ba nitrate	20	
		Pb azide	20	
	Pep (primer mix*4)(alt)			0.92
		Pb styphnate	40	
		Sb sulfide	15	
		Ba nitrate	20	
		Pb azide	20	
	Pep (primer mix*5)(alt)			0.92
		Pb styphnate	40	
		Sb sulfide	15	
		Ba nitrate	20	
		Pb azide	20	
	Pep (primer mix*6)(alt)			0.92
		Pb styphnate	40	
		Sb sulfide	15	
		Ba nitrate	20	
		Pb azide	20	
	Pep (primer mix*7)(alt)			0.92
		Pb styphnate	40	

TABLE 4-1 (Continued)
PRINCIPAL COMPONENTS OF MUNITIONS

	Table 4-1. Principal Components of Munitions			
DODAC	Type	Compound	%	Weight (GR)
		Sb sulfide	15	
		Ba nitrate	20	
		Pb azide	20	
	Pep (Pb azide)			2.77
		Pb azide	100	
	Pep (Pb azide)(alt)			2.77
		Pb azide	100	
	Pep (RDX)			1.62
		RDX	100	
B632	**Ctg 60mm HE M49A4**			3.25 lb
	Pep (comp B)			0.42 lb
		RDX	60	
		TNT	39	
	Pep (comp B4) (alt)			0.42 lb
		RDX	60	
		TNT	40	
	Prop M9	see B506		40
	Pellet (black pwdr cl7)	see B630		1.65
	Pep (primer mix#70)	see B630		0.37
	Pep (primer mix#70) (alt)	see B630		48
	Flake square (Prop M8)	see B630		55
	Pellet booster			16.9 gm
		RDX	100	
	Pellet booster (alt)			16.9 gm
		Tetryl	98	
	Pellet booster (alt)			16.9 gm
		RDX	98.5	
	Pep (primer mix*2)	see B630		
	Pep (primer mix*3)(alt)	see B630		
	Pep (primer mix*4)(alt)	see B630		
	Pep (primer mix*5)(alt)	see B630		
	Pep (primer mix*6)(alt)	see B630		
	Pep (primer mix*7)(alt)	see B630		
	Pep (Pb azide)	see B630		
	Pep (Pb azide)(alt)	see B630		

TABLE 4-1 (Continued)
PRINCIPAL COMPONENTS OF MUNITIONS

Table 4-1. Principal Components of Munitions				
DODAC	Type	Compound	%	Weight (GR)
	Pep (RDX)	see B630		
B642	**ctg 60mm HE M720**			3.75 lb
	Prop M9	see B506		52
	Pellet (black pwdr cl7)	see B630		3.12
	Pep (primer mix #70)	see B630		0.37
	Pep (primer mix #70) (alt)	see B630		0.48
	Pep (comp B)	see B632		0.79
	Prop M10			125
		NC (N 13.15)	84.2	
	Container top slurry			1.28 gm
		NC	71	
		Fiber craft	10.75	
	Container bottom slurry			1.28 gm
		NC	71	
		Fiber craft	10.75	
	Closure			1.1
		NC	71	
		Fiber craft	10.75	
	Container top paper (alt)			1.28 gm
		NC	78	
	Container bottom paper (alt)			1.28 gm
		NC	78	
	Closure (alt)			1.1
		NC	71	
		Fiber craft	10.75	
	Pellet booster (comp A5)			8 gm
		RDX	98.5	
	Pep (pbxn-5)			152 mg
		HMX	95	
	Pep (HMX)			16 mg
		HMX	98	
	Pep (HMX) (alt)			16 mg
		HMX	98	
	Pep (pb azide)	see B630		14 mg
	Spot Chg			1.6 mg

TABLE 4-1 (Continued)
PRINCIPAL COMPONENTS OF MUNITIONS

	Table 4-1. Principal Components of Munitions			
DODAC	Type	Compound	%	Weight (GR)
		N-amyl alchohol	32.16	
		Pb styphnate	53.71	
	Pep (pb azide)	see B630		85 mg
	Pep (pb azide) (alt)	see B630		85 mg
	Pep (RDX)	see B630		32.5 mg
	Pep (RDX Blend 98/2) (alt)			32.5 mg
		RDX	98.5	
	Pep (primer mix mol #130*2)			42.5 mg
		Pb styphnate	40	
		Pb azide	20	
		Ba nitrate	20	
		Sb sulfide	15	
	Pep (output mix)			15 mg
		Pb azide	11	
		Zr	26	
		Pb Peroxide	60.3	
	Pep (input mix)			15 mg
		Pb styphnate	40	
		Pb azide	20	
		Ba nitrate	20	
		Sb sulfide	15	
	Pep (pb azide)	see B630		17 mg
	Pep (delay mix*1)			50 mg
		Ba chromate	86	
		B amorphous pwdr	14	
C226	**Ctg 81mm Illum M301 w/fuze time M84**			10.7 lb
	Pellet (black pwdr cl7)	see B630		1.65
	Pep (primer mix #70)	see B630		0.37
	Pep (primer mix #70) (alt)	see B630		48
	Pep (first fire comp)			0.8 oz
		Ba nitrate	50	
		Si	20	
		TNC	10	
		Zr hydride	15	
	Pep (Illuminant comp)			22

TABLE 4-1 (Continued)
PRINCIPAL COMPONENTS OF MUNITIONS

Table 4-1. Principal Components of Munitions

DODAC	Type	Compound	%	Weight (GR)
		Mg pwdr	55	
		Na nitrate	36	
	Pep (black pwdr)	see B535		0.016 oz
	Prop M9	see B506		122
	Pep (black pwdr cl5)	see B535 cl7		75
	Pellet ign			92 mg
		K nitrate	70.7	
		Boron Amphorous	23.7	
	Pep (Primer Mix)			0.4
		K chlorate	37.05	
		Pb thiocyanate	38.13	
		Ground Galss	10.45	
	Pellet Ign	see above		87 mg
	Pellet ign	see above		75 mg
	Pep (fuze pwdr blend*1)			56
		K nitrate	72	
		S	13.2	
	Pellet ign	see above		115 mg
	Pep (fuze pwdr blend*1)	see above		49
	Prop M8	see B630		203.5
C236	**Ctg 81mm HE M374 w/o fuze**			9.34 lb
	Pellet (black pwdr cl7)	see B630		3.12
	Pep (primer mix #70)	see B630		48
	Prop M9	see B506		115
	Prop M9	see B506		184
	Prop M9	see B506		168
	Pep (comp B)	see B632		2.1 lb
	Pep (comp B4) (alt)	see B632		2.1 lb
	Pellet (black pwdr cl7)	see B630		3.12
	Pep (primer mix #70)	see B630		0.37
	Pep (primer mix #70) (alt)	see B630		48
	Prop M9	see B506		108
	Prop M9	see B506		184
	Prop M9	see B506		168
	Pep (comp B)	see B632		2.1 lb

TABLE 4-1 (Continued)
PRINCIPAL COMPONENTS OF MUNITIONS

Table 4-1. Principal Components of Munitions				
DODAC	Type	Compound	%	Weight (GR)
	Pep (comp B4) (alt)	see B632		2.1 lb
C256	**Ctg 81mm HE M374A3 w/fuze PD M567**			
	Pellet (black pwdr cl7)	see B630		3.12
	Prop M9	see B506		115
	Pep (primer mix #70)	see B630		0.37
	Pep (primer mix #70) (alt)	see B630		48
	Pep (primer mix k-75)			0.5
		Pb styphnate		
		Ba nitrate		
		Sb sulfide		
	Prop M10 flake			392
		NC	97.58	
	Container bottom			2.315 gm
		NC	78	
	Container top			2.315 gm
		NC	78	
	Closure			0.003
		NC	71	
		Fiber craft	10.75	
	Container bottom paper	Same as above		2.315
	Container top paper	Same as above		2.315
	Pep (comp B)	see B632		2.1 lb
	Pep (comp B4) (alt)	see B632		2.1 lb
	Pellet booster	see B632		23.374 gm
	Pep (comp A5)	see Pellet booster		2310 mg
	Pep (RDX)	see B632		140 mg
	Pep (RDX)	see B632		70 mg
	Pep (Pb azide)	see B630		82 mg
	Delay Comp			25 mg
		Ba chromate	86	
		B amorphous	14	
	Ign pwdr A1A			42 mg
		Zr pwdr	65	
		Fe oxide	25	
		diatomaceous	10	

TABLE 4-1 (Continued)
PRINCIPAL COMPONENTS OF MUNITIONS

Table 4-1. Principal Components of Munitions				
DODAC	Type	Compound	%	Weight (GR)
	Primer mix pa-100			32 mg
		K chlorate	53	
		Pb thiocyanate	25	
		Sb sulfide	17	
	Pep (RDX)	see B632		75 mg
	Pep (RDX) (alt)	see B632		75 mg
	Pep (Pb azide)	see B630		95 mg
	Pep (Pb azide) (alt)	see B630		95 mg
	Pep (primer mix nol #130*10)			15 mg
		Pb styphnate	40	
		Sb sulfide	15	
		Ba nitrate	20	
		Pb azide	20	
	Delay material			180 mg
		Ba chromate	52	
		K perchlorate	12.3	
		Zr-Ni Alloy	23	
	Delay material			63 mg
		Ba chromate	61.7	
		K perchlorate	12.3	
		Zr-Ni Alloy	23	
	Pyrotechnic mix			16 mg
		Pb styphnate	40	
		Red lead oxide	43.98	
		Silicon	11.01	
	Ign pwdr F33B			72 mg
		Zr pwdr	41	
		Fe oxide	49	
		Diatomaceous Earth	10	
	Pep (primer mix #70)	see B630		8.5 mg
C276	**Ctg 81mm smk wp M375 w/fuze**			9.34 lb
	Pellet (pellet expl comp)	see B630		11.7 gm
	Pep (RDX) (alt)	see B632		11.7 gm
	Pep (comp A5) (alt)	see B630		11.7 gm
	Prop M9	see B506		115

TABLE 4-1 (Continued)
PRINCIPAL COMPONENTS OF MUNITIONS

	Table 4-1. Principal Components of Munitions			
DODAC	Type	Compound	%	Weight (GR)
	Pellet (black pwdr cl7)	see B630		3.12
	Pep (primer mix #70)	see B630		0.37
	Prop M9	see B506		184
	Prop M9	see B506		168
	Pep (RDX)	see B632		1.77
	Pep (RDX) (alt)	see B632		1.77
	Pep (Pb azide)	see B630		3.41
	Comp delay			32 mg
		Ba chromate		83
		B amorphous pwdr		16
	Pep (primer mix nol #130*11)	see C256		20 mg
	Pep (primer mix nol #130*12) (alt)	see C256		20 mg
	Pep (Pb azide)	see B630		1.43
	Pep (Pb azide) (alt)	see B630		1.43
	Pep (RDX)	see B632		1.9
	Pep (RDX) (alt)	see B632		1.9
	Pep (primer mix nol #130*14)	see C256		0.31
	Pep (RDX)	see B632		0.99
	Pep (RDX) (alt)	see B632		0.99
	Pep (Pb azide)	see B630		2
	Pep (RDX)	see B632		8.3
	Pep (RDX) (alt)	see B632		8.3
	Pep (comp A5) (alt)	see B630		8.3
	Pep (RDX)	see B632		0.37
	Pep (RDX) (alt)	see B632		0.37
	Pep (comp A5) (alt)	see B630		0.37
	Pellet booster	see B632		35.93
	Pellet booster (tetryl pellets) (alt)			35.93
		Tetryl	98	
C697	**Ctg 4.2in HE M329A2 w/o fuze**			22 lb
	Half increment (Prop M8)	see B630		122.9
	Half increment (Prop M8)	see B630		122.9
	Half increment (Prop M8)	see B630		614.5
	Prop M9	see B506		340
	Half increment (Prop M8)	see B630		614.5

TABLE 4-1 (Continued)
PRINCIPAL COMPONENTS OF MUNITIONS

Table 4-1. Principal Components of Munitions				
DODAC	Type	Compound	%	Weight (GR)
	Half increment (Prop M8)	see B630		122.9
	Pep (black pwdr)	see B535		170
	Primer (primer mix)			1
		Ba nitrate	42	
		Pb styphnate	40	
		Sb Sulfide	22	
	Pep (comp B (RDX cl A))	see B632		5.75 lb
	Pep (supp Charge comp)			0.30 lb
		TNT	98.5	
D445	**Canister 155mm smk hc M1**			7.35 lb
	Slug (starter mix)			0.5 lb
		Si	26	
		K nitrate	35	
		Fe oxide blk	22	
		Al pwdr	13	
	Wht smk mix 1			3.0 lb
		Hexachloroethane	44.53	
		Zn oxide	46.47	
	Impregnating mix 1			0.00 lb
		K nitrate	70.5	
		Charcoal	29.5	
D449	**Canister 155mm smk ylw M3**			4.81 lb
	Starter mix 3			30 gm
		K nitrate	70.5	
		Charcoal	29.5	
	Starter mix 2			30 gm
		Si	26	
		K nitrate	35	
		Fe oxide	22	
		Al pwdr	13	
	Yellow smk mix			1430.46 g
		K chlorate	26.5	
		Lactose technical	16	

TABLE 4-1 (Continued)
PRINCIPAL COMPONENTS OF MUNITIONS

	Table 4-1. Principal Components of Munitions			
DODAC	Type	Compound	%	Weight (GR)
		Dye yellow	17.5	
		Dye benzanthrone	32	
	Impregnating mix 1	see 445		0.00 lb
D451	**Canister 155mm smk green M4**			2.77 lb
	Starter mix 3	see D445		30 gm
	Starter mix 2	see D445		30 gm
	Yellow smk mix	see D445		728.65 gm
	Impregnating mix 1	see D445		0.00 lb
D513	**Proj 155mm Prac M804**			94.6 lb
	Smoke mix (smoke mix SW-522)			195 gm
		Zn dust	40	
		K perchlorate	20	
		K nitrate	20	
		Al pwdr	20	
	Smoke mix (smoke mix SW-522)	see above		195 gm
D540	Chg. Prop 155mm GB M3A1			5.817 lb
	Prop M1			2 lb
		NC	83.34	
	Pep (CBI ign pwdr)			3.5 oz
		NC	98.2	
	Pep (K nitrate)			2 oz
		K nitrate	100	
	Pep (K sulfate) (alt)			2 oz
		K sulfate	100	
	Pep (Spi ign pwdr)			3 oz
		NC (N 13%)	94.95	
	Pep (K nitrate)	see above		2 oz
	Pep (K sulfate) (alt)	see above		2 oz
	Prop M1	see above		8 oz
	Prop M1	see above		10.5 oz
	Prop M1	see above		14.5 oz

TABLE 4-1 (Continued)
PRINCIPAL COMPONENTS OF MUNITIONS

Table 4-1. Principal Components of Munitions				
DODAC	Type	Compound	%	Weight (GR)
	Pep (K nitrate)	see above		1 oz
	Pep (K sulfate) (alt)	see above		1 oz
	Prop M1	see above		25 oz
	Pep (K nitrate)	see above		1 oz
	Pep (K sulfate) (alt)	see above		1 oz
G839	**Ctg 7.62mm Nato Gren Rifle M64**			241
	Case	Cu Alloy		190
		Cu	70	
		Zn	29.88	
	Prop WC830			45
		NC (N 13.15%)	73.17	
		Nitroglycerin	19	
	Prop Imr 8097 (alt)			40
		NC (N 13.15%)	95.68	
	Prop HPC 4 (alt)			37
		NC (N 13.25%)	74.85	
		Nitroglycerin	20	
	Pellet booster (primer comp Fa-956)			0.6
		Sb sulfide	15	
		Ba nitrate	32	
		Pb styphnate	37	
	Pellet (primer mix FA-1023)			0.58
		Sb sulfide	12	
		Ba nitrate	39	
		Pb styphnate	38	
G922	**Gren hand riot cs M47 w/fuze M227**			410 gm
	Riot mix CS			185 gm
		K chlorate	27	
		CS	40	
		Suger	18	
		Mg Carbonate	12	
	First fire mix 10			0.35 gm
		Si	25	

TABLE 4-1 (Continued)
PRINCIPAL COMPONENTS OF MUNITIONS

Table 4-1. Principal Components of Munitions				
DODAC	Type	Compound	%	Weight (GR)
		Pb red	50	
		Ti pwdr	25	
	Ign mix 3			0.30 gm
		Fe oxide	49.1	
		Ti pwdr	31.91	
		Zr	17.19	
	Delay mix 5			1.60 gm
		Si	20	
		Pb red	80	
	Primer mix nol #60			0.11 gm
		Pb styphnate	60	
		Sb sulfide	10	
		Ba nitrate	25	
G930	**Gren hand smk HC an-M8**			1.00 lb
	Wht smk mix 1	see D445		480 gm
	Slug (Starter mix)	see D445		19 gm
	Ign comp (mix KCLO4 30%)			15 gm
		Ti technical	69.5	
		K perchlorate	29.5	
	Pep (mixture Zr pwdr 65 %)			30 mg
		Zr pwdr	65	
		Fe oxide	25	
		Diatomaceous earth	10	
	Pep (Delay comp mix)			600 mg
		Mn pwdr	42	
		Pb chromate	53	
	Pep (primer mix)	see C226		0.4
G932	**Gren hand smk red M48 w/M227 fuze**			1.19 lb
	Red smk mix			165 gm
		Dye red	63.6	
		K chlorate	24.7	
	Firse fire mix 10	see G922		0.35 gm
	Ign mix 3	see G922		

TABLE 4-1 (Continued)
PRINCIPAL COMPONENTS OF MUNITIONS

	Table 4-1. Principal Components of Munitions			
DODAC	Type	Compound	%	Weight (GR)
	Delay mix 5	see G922		
	Primer mix nol #60	see G922		
G940	**Gren hand smk Grn M18**			19 oz
	Dye smoke VII (smk mix grn)			11.5 oz
		Dye Green	42	
		Na bicarbonate	24	
		K chlorate	25	
	Starter mixture (mix KNO3 49.1 %)			7.00 gm
		Si	36.4	
		K nitrate	49.1	
	Starter mixture (mix KNO3 25.9 %) (alt)			190
		K chlorate	25.9	
		S	10.1	
		Na bicarbonate	18	
	Ign Comp (mix kclo4 30%)	see G930		15 mg
	Pep (mixture Zr pwdr 65%)	see G930		30 mg
	Pep (delay comp mix)	see G930		600 mg
	Pep (primer mix)	see C226		0.4
G945	**Gren hand smk ylw M18**			19 oz
	Ylw smk XII (smk mix Ylw)			11.5 oz
		Dye ylw	42	
		Na bicarbonate	24	
		K chlorate	25	
	Starter mixture (mix kno3)	see G940		7.00 gm
	Starter mix (mix KNO3) (alt)	see G940		190
	Ign comp (mix kclo4 30%)	see G930		15 mg
	Pep (mixture Zr pwdr 65%)	see G930		30 mg
	Pep (delay comp mix)	see G930		600 mg
	Pep (primer mix)	see C226		0.4
G950	**Gren hand smk red M18**			19 oz
	Red smk III (smk mix red)			11.5 oz

TABLE 4-1 (Continued)
PRINCIPAL COMPONENTS OF MUNITIONS

	Table 4-1. Principal Components of Munitions			
DODAC	Type	Compound	%	Weight (GR)
		Dye red	42	
		Na bicarbonate	24	
		K chlorate	25	
	Starter mixture (mix kno3)	see G940		7.00 gm
	Starter mix (mix KNO3) (alt)	see G940		190
	Ign comp (mix kclo4 30%)	see G930		15 mg
	Pep (mixture Zr pwdr 65%)	see G930		30 mg
	Pep (delay comp mix)	see G930		600 mg
	Pep (primer mix)	see C226		0.4
G955	**gren hand smk vio M18**			19 oz
	Violet smk IV (smk mix violet)			11.5 oz
		Dye violet	42	
		Na bicarbonate	24	
		K chlorate	25	
	Starter mixture (mix kno3)	see G940		7.00 gm
	Starter mix (mix KNO3) (alt)	see G940		190
	Ign comp (mix kclo4 30%)	see G930		15 mg
	Pep (mixture Zr pwdr 65%)	see G930		30 mg
	Pep (delay comp mix)	see G930		600 mg
	Pep (primer mix)	see C226		0.4
G963	**Gren hand riot CS**			15.5 oz
	Pellet CS sugar Cated			4.5 oz
		CS	81.1	
		Sugar	16.5	
	Fuel mix 6			7.35 oz
		K chlorate	40.96	
		Sugar	27.3	
		Mg carbonate	29.26	
	Starter mix 12			1.5 oz
		K nitrate	67.68	
		Charcoal	28.32	
	Ign comp (mix kclo4 30%)	see G930		15 mg
	Pep (delay comp mix)	see G930		600 mg

TABLE 4-1 (Continued)
PRINCIPAL COMPONENTS OF MUNITIONS

Table 4-1. Principal Components of Munitions				
DODAC	Type	Compound	%	Weight (GR)
	Ign pwdr A1A	see C256		30 mg
	Pep (primer mix)	see C226		0.4
K058	**fuze mine M605**			0.38 lb
	Pep (balck pdwr cl5)	see B535 cl7		648 mg
	Pep (delay comp (Ba Cr 60 %))			475 mg
		Ba chromate	60	
		K perchlorate	14	
		Zr-Nickel Alloy pow	17	
	Pep (primer mix PA-101)	see B506		0.33
	Pep (primer mix #793) (alt)	see B506		0.33
	Pep (primer mix #5086) (alt)	see B506		0.33
K145	**Mine apers M18A1 w/accessories**			0
	Pep (comp C4)			1.5 lb
		RDX	22.6	
		RDX	67.9	
	Pep (RDX)	see B630		14.5
	Pep (Pb azide)	see B630		270 mg
	Pep (ign chg)			1.5
		K chlorate	25	
		Pwdr smokeless	50	
		Pb salt-dnoc	25	
L306	**Signal illum grnd M158**			1.11 lb
	Pep (balck pwdr cl5)	see B535 cl7		710 mg
	Pep (balck pwdr cl5)	see B535 cl7		750 mg
	Pep (flash comp)			90 mg
		Zr	58	
		Cr oxide	16	
		Mo trioxide	25	
	Pep (ign comp mix) (alt)	see B535		80 mg
	Pep (black pwdr cl7) (alt)	see B535		140 mg
	Pep (delay comp)			570 mg

TABLE 4-1 (Continued)
PRINCIPAL COMPONENTS OF MUNITIONS

	Table 4-1. Principal Components of Munitions			
DODAC	Type	Compound	%	Weight (GR)
		K perchlorate	11.4	
		Ba chromate	56.3	
		W	32	
	Pep (red star comp)			0.5 oz
		Polyvinyl chloride	15	
		Mg	33	
		Sr nitrate	48	
	Pep (first fire comp)	see C226		
	Pep (quickmatch mix)			2
		K nitrate	74	
		charcoal	15.6	
		S	10.4	
	Grain drop (black pwdr mix)			13 gm
		K nitrate	67.4	
		Charcoal	14.2	
	Pep (Primer mix #955)			0.9
		Pb styphnate	40	
		Ba nitrate	30	
		Sb sulfide	15	
L307	**Signal illum grne M159**			1.11 lb
	Pep (balck pwdr cl5)	see B535 cl7		750 mg
	Pep (balck pwdr cl5)	see B535 cl7		750 mg
	Pep (flash comp)	see L306		90 mg
	Pep (ign comp mix) (alt)	see B535		80 mg
	Pep (black pwdr cl7) (alt)	see B535		140 mg
	Pep (delay comp)	see L306		570 mg
	Pep (illum comp wht)			0.75 oz
		Mg	29.5	
		Ba nitrate	49	
		Sr nitrate	16.5	
	Pep (Illum comp wht) (alt)	same as above		0.75 oz
	Pep (first firs comp)	see C226		2
	Pep (quickmatch mix)	see L306		2
	Grain drop (black pwdr mix)	see L306		13 gm
	Pep (Primer mix #955)	see L306		0.9

TABLE 4-1 (Continued)
PRINCIPAL COMPONENTS OF MUNITIONS

Table 4-1. Principal Components of Munitions				
DODAC	Type	Compound	%	Weight (GR)
L311	**Signal Illum grnd red star para M126**			1.20 lb
	Grain Drop (black pwdr mix)	see L306		13 gm
	Pep (flash comp)	see L306		90 mg
	Pep (ign comp mix) (alt)	see B535		80 mg
	Pep (black pwdr cl7) (alt)	see B535		140 mg
	Pep (delay comp)	see L306		570 mg
	Pep (Primer mix #955)	see L306		0.9
	Pep (illum comp 1*1)			90 mg
		Mg pwdr	66	
		Na nitrate	29	
	Pep (first fire comp)	see C226		87.14
	Pep (quickmatch mix)	see L306		4.07
L312	**Signal illum grnd M127**			
	Pep (balck pwdr cl5)	see B535 cl7		1460 mg
	Grain Drop (black pwdr mix)	see L306		13 gm
	Pep (flash comp)	see L306		90 mg
	Pep (ign comp mix) (alt)	see B535		80 mg
	Pep (black pwdr cl7) (alt)	see B535		140 mg
	Pep (delay comp)	see L306		570 mg
	Pep (first fire comp)	see C226		2
	Pep (illum comp 1*1)	see L311		85 gm
	Pep (illum comp 1*2) (alt)	same as 1*1 above		85 gm
	Pep (illum comp 2*1)			85 gm
		Mg pwdr	65	
		Na nitrate	31	
	Pep (illum comp 2*2) (alt)	same as 2*1 above		85 gm
	Pep (quickmatch mix)	see L306		4.07
	Pep (Primer mix #955)	see L306		0.9
L314	**Signal Illum grnd M125A1**			1.11 lb
	Pep (balck pwdr cl5)	see B535 cl7		750 mg
	Pep (balck pwdr cl5)	see B535 cl7		750 mg

TABLE 4-1 (Continued)
PRINCIPAL COMPONENTS OF MUNITIONS

	Table 4-1. Principal Components of Munitions			
DODAC	Type	Compound	%	Weight (GR)
	Pep (flash comp)	see L306		90 mg
	Pep (ign comp mix) (alt)	see B535		80 mg
	Pep (black pwdr cl7) (alt)	see B535		140 mg
	Pep (delay comp)	see L306		570 mg
	Pep (illum comp grn)			0.5 oz
		Mg	33	
		Ba nitrate	46	
		Polyvinyl	16	
	Pep (illum comp grn) (alt)	same as above		0.5 oz
	Pep (first fire comp)	see C226		2
	Pep (quickmatch mix)	see L306		2
	Grain Drop (black pwdr mix)	see L306		13 gm
	Pep (Primer mix #955)	see L306		0.9
L594	**Simulator proj grnd burst M115A2**			0.30 lb
	Pep (primer paste)			0.2
		k Nitrate	66.6	
		Charcoal	14.04	
		Binder cell nitrate	10	
	Pep (flash comp)			2.3 oz
		Al pwdr	42.5	
		K perchlorate	57.5	
	Pep (whistle comp)			2.00 gm
		K perchlorate	69	
		Na salcylate	28	
	Pep (quickmatch mix)	see L306		4.07
	Pep (black pwdr)	see B535 cl7		0.5
	Pep (ign chg)			41 mg
		K chlorate	88	
		Charcoal	10	
	Friction comp			1.4
		Phosphorus red	21.4	
		Shellac	78.6	
L599	**simulator booby trap M118 illum**			0.14 lb

TABLE 4-1 (Continued)
PRINCIPAL COMPONENTS OF MUNITIONS

Table 4-1. Principal Components of Munitions				
DODAC	Type	Compound	%	Weight (GR)
	Pep (black pwdr)	see B535 cl7		2.25
	Pep (black pwdr)	see B535 cl7		70 mg
	Pep (starter paste)			19.4
		Binder cell nitrate	15	
		K nitrate	62.9	
		Charcoal	13.26	
	Pep (matchhead comp)			9.56
		Red phosphorus	53	
		Sb sulfide	42	
	Flare comp			5.00 gm
		K perchlorate	80	
		Red gum	14	
	Pep (black pwdr)	see B535 cl7		8.14
L600	**simulator booby trap M119 whistle**			0.15 lb
	Pep (black pwdr)	see B535 cl7		2.25
	Pep (starter paste) (alt)	see L599		2.25
	Pep (whistle comp)	see L594		3.5 gm
	Pep (matchhead comp)	see L599		9.56
	Pep (quickmatch mix)	see L306		4.07
	Pep (scratch comp)			19.17
		K chlorate	52	
		Sb sulfide	31	
		Dextrin	17	
L601	**Simulator hand gren M116A1**			
	Pep (primer paste)	see L594		0.2
	Chg photoflash			1.3 oz
		Mg pwdr	34	
		K perchlorate	40	
		Al pwdr	26	
	Pep (black pwdr)	see B535 cl7		0.5
	Pep (ign chg)	see L594		41 mg
	Friction comp	see L594		1.4

TABLE 4-1 (Continued)
PRINCIPAL COMPONENTS OF MUNITIONS

	Table 4-1. Principal Components of Munitions			
DODAC	Type	Compound	%	Weight (GR)
M023	**Chg demo M1112**			1.26 lb
	Comp C-4			1.25 lb
		RDX	91	
M032	**Chg demo block tnt 1lb**			1.06 lb
	Chg 1lb block (tnt)			1.00 lb
		TNT	100	
	Chg 1lb block (tnt pellet) (alt)			1.00 lb
		TNT	98.25	
M103	**Cap blasting #3 delay elect**			0
	Pep (base chg)			13.5
		Petn	100	
	Pep (base chg) (alt)			13.5
		RDX	100	
	Pep (primary chg)			0
		Pb azide	100	
M130	**Cap blasting electric M6**			0.07 lb
	Pep (RDX)	see B630		14.5
	Pep (Pb azide)	see B630		270 mg
	Pep (chg intermediate) (alt)			270 mg
		Pb azide	99.5	
	Pep (ign chg)	see K145		1.8
M131	**Cap blasting non elec M7**			28
	Pep (RDX)	see B630		14.5
	Pep (Pb azide)	see B630		3.7
	Pep (Pb styphnate)			1.1
		Pb styphnate	100	
	Pep (chg ign) (alt)			1.1
		Pb azide	60	

TABLE 4-1 (Continued)
PRINCIPAL COMPONENTS OF MUNITIONS

Table 4-1. Principal Components of Munitions				
DODAC	Type	Compound	%	Weight (GR)
		Pb styphnate	40	
M456	**Cord detonating**			88 lb
	Pep (petn)			0.01 lb
		Petn	100	
M582	**Fuze MTSQ**			
	Pep (primer mix nol #130*10)			23 mg
		Pb styphnate	40	
		Sb sulfide	15	
		Ba nitrate	20	
		Pb azide	20	
	Pep (Pb Azide)	see B630		75 mg
	Pep (RDX pellet)	see B630		70 mg
	Pep (RDX) (alt)	see B630		70 mg
M591	**Military dynamite M1**			0.39 lb
	Dynamite			0.37 lb
		RDX	73	
		TNT	15	
	Dynamite (alt)	same as above		0.37 lb
M670	**Fuse blasting time M700**			68 lb
	Pep (black pwdr (special))			0
		K nitrate	71	
		S	13	
		Charcoal	16	
M766	**Ign time blasting M60**			0
	Pep (primer mix)	see C226		0.4
	Pep (primer mix #955)	see L306		0.48

TABLE 4-1 (Continued)
PRINCIPAL COMPONENTS OF MUNITIONS

	Table 4-1. Principal Components of Munitions			
DODAC	Type	Compound	%	Weight (GR)
N286	**Fuze MTSQ M582**			1.51 lb
	Pellet booster	see B632		23.264 gm
	Pep (primer mix nol #130)*9	see M582		0.23
	Pep (Pb azide)	see B630		0.79
	Pep (RDX)	see B630		0.29
	Pep (primer mix nol #130)*4 (alt)	see M582		15 mg
	Pep (primer mix nol #130)*5 (alt)	see M582		15 mg
N335	**Fuze PD M557**			2.12 lb
	Pellet booster (Tetryl 98%)	see B632		0.71
	Pep (Pb azide)	see B630		4.08
	Pep (Tetryl)	see B630		1.23
	Pep (chg tetryl)			3.78
		Tetryl	98	
	Pep (primer mix kclo3)			0.86
		K chlorate	33.4	
		Sb sulfide	33.3	
		Pb azide	28.3	
	Pep (primer mix #70)	see B630		0.17
	Pep (black pwdr)	see B535 cl7		0.32
	Pep (Pb azide)	see B630		1.43
N402	**Fuze Prox M532**			1.28 lb
	Ign pwdr			0.0634
		Phouphous	51	
		Butyrate dope	32	
	Primer pwdr			99.5
		Charcoal	11	
		K chlorate	87	
	Pep (chg mix) (petn 99.5)			65 mg
		Petn	99.5	
	Pep (Pb azide)	see B630		65 mg
	Spot chg			5 mg
		N-amyl alcohol	23.02	

TABLE 4-1 (Continued)
PRINCIPAL COMPONENTS OF MUNITIONS

Table 4-1. Principal Components of Munitions				
DODAC	Type	Compound	%	Weight (GR)
		Pb styphnate	59.92	
N464	**Fuze prox M732**			1.75 lb
	Pellet booster	see B632		5.85 gm
	Pep (HMX)	see B642		16 mg
	Pep (Pb azide)	see B630		14 mg
	Spot chg	see N402		1.6 mg
	Pep (PBXN-5)			110 mg
		HMX	95	
	Pep (priming mix)	see N335 kclo3		25 mg
	Pep (HMX)	see B642		110 mg
	Pep (Pb azide)	see B630		70 mg
N523	**Primer Perc M82**			
	Pellet booster	see B632		0.6
	Pep (primer mix k-75)			0.557
		Pb styphnate	39	
		Ba nitrate	41	
		Sb sulfide	19	
	Pep (black pwdr)	see B535 cl7		1.36
N525	**Primer Perc MK2A4**			0.06 lb
	Pep (black pwdr)	see B535 cl7		19
	Pellet booster	see B632		0.6
	Pellet (primer comp FA-961)			0.6
		Pb styphnate	36	
		Ba nitrate	29	
	Pep (primer mix k-75)	see N523		0.44
	Pep (primer mix #5061) (alt)			0.56
		Pb styphnate	38	
		Ba nitrate	43	
	Pep (primer mix #5074) (alt)			0.56
		Pb styphnate	38	
		Ba nitrate	39	

TABLE 4-1 (Continued)
PRINCIPAL COMPONENTS OF MUNITIONS

	Table 4-1. Principal Components of Munitions			
DODAC	Type	Compound	%	Weight (GR)
		Sb sulfide	12	
	Pep (primer mix #257w) (alt)			0.61
		Ba nitrate	33	
		Sb sulfide	13	
		Pb styphnate norma	38	
	Pep (primer mix #304) (alt)			0.5
		Pb styphnate	41	
		Ba nitrate	36	
	Pep (primer mix #5061 (dry)) (alt)	see above		0.55
	Pep (primer mix #5061w) (alt)	see above		0.55

TABLE 4-2:
LISTING OF UNIQUE COMPONENTS FROM TABLE 4-1

Al Powder	NC (N 13.13)
B amorphous Pwdr	NC (N 13.15%)
Ba chromate	NC (N 13.25%)
Ba nitrate	Nitroglycerin
Ba Peroxide	Pb azide
Binder cell nitrate	Pb chromate
Boron	Pb Peroxide
Brass	Pb red
Butyrate dope	Pb salt-dnoc
Ca silicide	Pb Sb
Charcoal	Pb Styphnate
Cr Oxide	Pb styphnate normal
CS*	Pb thiocyanate
Cu	Petn
Cu Alloy	Phosphorus red
Cu Alloy Clad Steel	Phosphorus
Cu Plated Steel	Polyvinyl
Dextrin	Polyvinyl chloride
Diatomaceous Earth	Ptfe*
Dye benzanthrone	Pwdr metal
Dye Disperse Red	Pwdr mtl ellipsoidal
Dye Green	Pwdr smokeless
Dye red	RDX
Dye solvent grn 3	Red gum
Dye violet	Red lead oxide
Dye yellow	Resin polyester
Dye yellow 4	S
Fe oxide	Sb Sulfide
Fe oxide blk	Shellac
Fiber craft	Si
formaldehyde/melamin	Silicon
Ground Glass	Sr Nitrate
Hexachloroethane	Sr Nitrate Anhydrous
HMX	Sr Peroxide
K chlorate	Steel
K nitrate	Sugar
K perchlorate	Tetranitrocarbazole
K sulfate	Tetryl

TABLE 4-2 (Continued)
LISTING OF UNIQUE COMPONENTS FROM TABLE 4-1

Lactose technical	Ti pwdr
Mg	Ti technical
Mg carbonate	TNC*
Mg Powder	TNT
Mo trioxide	W
N-amyl alcohol	Zn
Na bicarbonate	Zn dust
Na Carbonate Monohydrate	Zn oxide
Na nitrate	Zr
Na salcylate	Zr-Ni Alloy
NC*	Zr-Nickel Alloy pow
NC (N 13%)	Zr hydride
NC (N 13.1)	Zr pwdr
CS = o-chlorobenzylidenemalononitrile	
NC = nitrocellulose	
Ptfe = polytetrafluoroethylene	
TNC = tetranitrocarbazole	

TABLE 4-3:
SUMMARY OF TECHNICAL MANUAL NUMBERS AND DODAC CODES FOR U.S. MUNITIONS AND EXPLOSIVES CAMP EDWARDS IMPACT AREA GROUNDWATER QUALITY STUDY

Munition Type	Weapon(s) Launcher(s) Used	Technical Manual Designation/Page #	Midas Report (Y/N)	Used at MMR in Last 9 Years	DODAC Code(s)
SMALL CALIBER MUNITIONS (Shotgun)					
Cartridge, .410, Shotgun, M35	rifle/shotgun, M6 caliber .22/.410	TM 43-0001-27/2-3	No	✓	1305-A055
Cartridge, 10 Gage, Shotgun, Blank	3" gun, 75-mm gun, 75-mm howitzer, 105-mm howitzer	TM 43-0001-27/2-5	No	✓	1305-A010
Cartridge, 12 Gage, Shotgun, M19	2-3/4 " chamber shotguns, military issue shotgun	TM 43-0001-27/2-7	Yes	✓	1305-A011
Cartridge, 12 Gage, Shotgun, M257	military issue shotgun, 20" full choke barrel	TM 43-0001-27/2-9	Yes	✓	1305-A011
Cartridge, 12 Gage, Shotgun, M274	military issue riot shotgun, 20 " barrel cylinder bore	TM 43-0001-27/2-11	Yes	✓	1305-A011
Cartridge, 12 Gage, Shotgun, M162	2-3/4 " chamber shotguns, military issue shotgun	TM 43-0001-27/2-13	Yes	✓	1305-A011
SMALL CALIBER MUNITIONS (.30 Cal)					
Cartridge. .30 Caliber, Carbine, Ball, M1	.30 caliber, carbine- M1, M2, or M3	TM 43-0001-27/4-3	No		1305-A181
Cartridge, .30 Caliber, Tracer, M1	.30 caliber machine guns- M37, M1919A4, M1919A6, .30 caliber rifle- M1	TM 43-0001-27/5-3	No		1305-A231
Cartridge, .30 Caliber, Ball, HPT, M1	.30 caliber weapons, except carbine	TM 43-0001-27/5-5	No		1305-A237
Cartridg, .30 Caliber, Ball, M2	.30 caliber machine guns- M37, M1919A4, M1919A6, .30 caliber rifle- M1	TM 43-0001-27/5-7	No	✓	1305-A212
Cartridge, .30 Caliber, Tracer, M25	.30 caliber machine guns- M1917A1, M37, M1919A4, M1919A6, .30 caliber rifle- M1	TM 43-0001-27/ 5-17	No		1305-A230
Cartridge, .30 Caliber, Ball, Match, M72	.30 caliber rifle- M1 and national match	TM 43-0001-27/5-21	No		1305-A247
Cartridge, .30 Caliber, blank, M1909	.30 caliber machine guns- M37, M1919A4, M1919A6,	TM 43-0001-27/5-23	No		1305-A222
SMALL CALIBER MUNITIONS (.45 Cal)					
Cartridge, .45 Caliber, Ball, HPT, M1	all .45 caliber weapons	TM 43-0001-27/8-3	No	✓	1305-A480
Cartridge, .45 Caliber, Blank, M9	.45 caliber pistol- M1911A1	TM 43-0001-27/8-5	No	✓	1305-A476
Cartridge, .45 Caliber, Tracer, M26	.45 caliber submachine gun- M3A1 .45 caliber pistol- M1911A1	TM 43-0001-27/8-7	No		1305-A479

NOTES: BFA - Blank Firing Attachment
PP - Plastic Practice
HE - High Explosive
OFA - Overhead Fire Application
GP - General Purpose
MTD - Mortar Training Device
SCPC - Sub Caliber Practice Cartridge
WP - White Phosphorus
--- = No listed information

TABLE 4-3 (Continued)
SUMMARY OF TECHNICAL MANUAL NUMBERS AND DODAC CODES

Munition Type	Weapon(s) Launcher(s) Used	Technical Manual Designation/Page #	Midas Report (Y/N)	Used at MMR in Last 9 Years	DODAC Code(s)
SMALL CALIBER MUNITIONS (.50 Cal)					
Cartridge, .50 Caliber, Tracer, M1	.50 caliber machine guns- M2 and M85	TM 43-0001-27/9-3	No		1305-A591
Cartridge, .50 Caliber, Ball, HPT, M1	50 caliber weapons, except M8C	TM 43-0001-27/9-5	No		1305-A575
Cartridge, .50 Caliber, Blank, M1	.50 caliber machine gun- M2	TM 43-0001-27/9-9	No		1305-A558
Cartridge, .50 Caliber, Blank, M1A1	.50 caliber machine gun- M2 with M19 BFA and M85 with M20 BFA	TM 43-0001-27/9-10	No		1305-A559
Cartridge, .50 Caliber, Ball, M2	.50 caliber machine guns- M2 and M85	TM 43-0001-27/9-15	No	✓	1305-A552
Cartridge, .50 Caliber, Tracer, M10	.50 caliber machine guns- M2 and M85	TM 43-0001-27/9-19	No	✓	1305-A570
Cartridge, .50 Caliber, Tracer, M17	.50 caliber machine guns- M2 and M85	TM 43-0001-27/9-21	No	✓	1305-A571
Cartridge, .50 Caliber, Ball, PP, M858	.50 caliber machine guns- with M3 recoil amplifier	TM 43-0001-27/9-37	No	✓	1305-A603
Cartridge, .50 Caliber, Tracer, PP, M860	.50 caliber machine guns- with M2 recoil amplifier	TM 43-0001-27/9-39	No	✓	1305-A595
SMALL CALIBER MUNITIONS (5.56mm)					
Cartridge, 5.56mm, Ball, M193	5.56mm rifle- M16 and M16A1	TM 43-0001-27/10-4	Yes	✓	1305-A066
Cartridge, 5.56mm, Ball, M855	5.56mm machine gun- M249E1, 5.56mm rifle- M16A2	TM 43-0001-27/10-4.1	No	✓	1305-A059
Cartridge, 5.56mm, Grenade, M195	5.56mm rifle- M16 and M16A1	TM 43-0001-27/10-5	No		1330-G481
Cartridge, 5.56mm, Tracer, M196	5.56mm rifle- M16 and M16A1	TM 43-0001-27/10-7	Yes	✓	1305-A068
Cartridge, 5.56mm, Tracer, M856	5.56mm machine gun- M249E1, 5.56mm rifle- M16A2	TM 43-0001-27/10-8.1	No	✓	1305-A063
Cartridge, 5.56mm, Blank, M200	5.56mm rifle- M16 and M16A1	TM 43-0001-27/10-13	Yes	✓	1305-A080
Cartridge, 5.56mm, Blank, M755	5.56mm rifle- M16A1	TM 43-0001-27/10-16	No	✓	
Cartridge, 5.56mm, Plastic, Practice, M862	5 56mm rifle- M16A1 with XM2 practice bolt	TM 43-0001-27/10-19	No	✓	1305-A065
SMALL CALIBER MUNITIONS (7.62mm)					
Cartridge, 7.62mm, Ball, M59	7.62mm machine gun- M60 and M219, 7.62mm rifle- M14	TM 43-0001-27/11-3	Yes	✓	1305-A143
Cartridge, 7.62mm, HPT, M60	all 7.62mm weapons	TM 43-0001-27/11-5	No	✓	1305-A129
Cartridge, 7.62mm, Tracer, M62	7.62mm machine gun- M60, M219, and M240, 7.62mm rifle- M14	TM 43-0001-27/11-9	No	✓	1305-A124
Dummy cartridge, 7.62mm, M63	7.62mm machine gun- M60, M219, and M240, 7.62mm rifle- M14	TM 43-0001-27/11-13	No	✓	1305-A135
Cartridge, 7.62mm, Grenade, M64	7 62mm rifle- M14	TM 43-0001-27/11-15	Yes	✓	1305-G839
Cartridge, 7.62mm, Ball, M80	7.62mm machine gun- M60, M219, and M240, 7.62mm rifle- M14	TM 43-0001-27/11-17	No	✓	1305-A122
Cartridge, 7.62mm, Ball, M80 (OFA)	7 62mm machine gun- M60, M219, and M240,	TM 43-0001-27/11-19	No	✓	1305-A166
Cartridge, 7.62mm, Blank, M82	7.62mm machine gun- M60, M219, and M240, 7 62mm rifle- M14	TM 43-0001-27/11-21	No	✓	1305-A112

NOTES. BFA - Blank Firing Attachment
PP - Plastic Practice
HE - High Explosive
OFA - Overhead Fire Application
GP - General Purpose
MTD - Mortar Training Device
SCPC - Sub Caliber Practice Cartridge
WP - White Phosphorus
--- = No listed information

TABLE 4-3 (Continued)
SUMMARY OF TECHNICAL MANUAL NUMBERS AND DODAC CODES

Munition Type	Weapon(s) Launcher(s) Used	Technical Manual Designation/Page #	Midas Report (Y/N)	Used at MMR in Last 9 Years	DODAC Code(s)
SMALL CALIBER MUNITIONS (9MM)					
Cartridge, 9mm, Ball	modified M3 submachine gun	TM 43-0001-27/12	No	✓	1305-A360
SMALL CALIBER MUNITIONS (.38 CAL)					
Cartridge, .38 Caliber, Ball	all .38 caliber weapons	TM 43-0001-27/7-3	No	✓	1305-A408
ROCKETS/ ROCKET SYSTEMS					
Rocket, HE, 3.5 ": AT, M28A2	M20, M20A1, M20A1B1, M20B1	TM 43-0001-30/2-3	No		1340-H600
Rocket, Practice, 3.5 ", M29A2	M20, M20A1, M20A1B1, M20B1	TM 43-0001-30/2-9	No	✓	1340-H601
Light Antitank Weapon (LAW) System, M72	---	TM 43-0001-30/2-15	No		
Rocket, 66mm, M72, M72A1, M72A2, M72A3	---	TM 43-0001-30/2-17	No	✓	1340-H553, 1340-H554, 1340-H555, 1340-H557, 1340-H568
2.75", Aircraft Rocket (LSFFAR)	---	TM 43-0001-30/3-2	No	✓	
Rocket, Flechette, 2.75 ", WDU-4A/A	---	TM 43-0001-30/3-4	No	✓	1340-H459
Grenade, GP, HE: M73, Submunition	---	TM 43-0001-30/3-41	No	✓	
ARTILLERY/HOWITZERS/MORTARS					
Cartridge, 81mm, Target Practice M879	81mm mortar system	TM 43-0001-28/4-77	No	✓	
Cartridge, 40mm, HEI-T, MK11, MK2, MV2890	40mm gun cannons	TM 43-0001-28/2-5	No	✓	1310-B559
Cartridge, 90mm, HE-T, M71A1 and M71	90mm guns	TM 43-0001-28/2-35	No		1315-C280 (M71A1)
			No		1315-C265 (M71)
			No		1315-C266 (M71)
			No		1315-C267 (M71)
Cartridge, 90mm, HEAT, M348A1 and M348	90mm gun cannons	TM 43-0001-28/2-49	No	✓	1315-C268
Cartridge, 90mm, Blank, M394	90mm guns	TM 43-0001-28/2-55	No	✓	1315-C261
Cartridge, 105mm, APDS-T, M392A2 , M392	105mm guns	TM 43-0001-28/2-63	No	✓	1315-C505, C506
Cartridge, 105mm, HE, M1	---	TM 43-0001-28/3-9	No	✓	1315-C445
Projectile, 155mm, HE, M107	155mm howitzers	TM 43-0001-28/3-73	No		1320-D554 (deep cavity)
			No		1320-D571 (normal cavity)
Projectile, 8", HE, M106	---	TM 43-0001-28/3-131	No	✓	1320-D680
Cartridge, 60mm, HE, M49A3 and M49A2	60mm mortars- M2 or M19	TM 43-0001-28/4-3	Yes	✓	1310-B632
Cartridge, 60mm, HE, M49A5	---	TM 43-0001-28/4-7	No	✓	---
Cartridge, 60mm, Target Practice, M50A3	60mm mortars M2 and M19	TM 43-0001-28/4-9	No	✓	1310-B633
Cartridge, 60mm, Training, M69	60mm mortars M2 and M19	TM 43-0001-28/4-11	No	✓	1310-B629
Cartridge, 81mm, MTD, 81mm Sabot, M1 and 22mm SCPC M744, M745, M746, and M747	81mm mortars	TM 43-0001-28/4-18 5	No	✓	DODAC Not-Required
Cartridge, 81mm, Target Practice, M43A1	---	TM 43-0001-28/4-19	No		1315-C227
Cartridge, 4.2", HE, M3A1 and M3	---	TM 43-0001-28/4-55	No		1315-C704
Cartridge, 90mm, HEAT, M371A1	90mm recoilless rifles	TM 43-0001-28/5-19	No		1315-C282
Cartridge, 90mm, Practice, M371	90mm recoilless rifles	TM 43-0001-28/5-21	No		1315-C283
Cartridge, 106mm, HEAT, M344A1 and M344	106mm recoilless rifles	TM 43-0001-28/5-25	No	✓	1315-C650

NOTES. BFA - Blank Firing Attachment
PP - Plastic Practice
HE - High Explosive
OFA - Overhead Fire Application
GP - General Purpose
MTD - Mortar Training Device
SCPC - Sub Caliber Practice Cartridge
WP - White Phosphorus
--- = No listed information

TABLE 4-3 (Continued)
SUMMARY OF TECHNICAL MANUAL NUMBERS AND DODAC CODES

Munition Type	Weapon(s) Launcher(s) Used	Technical Manual Designation/Page #	Midas Report (Y/N)	Used at MMR in Last 9 Years	DODAC Code(s)
CHARGES (MORTARS)					
Charge, Propelling, 155mm, M3 series	155mm howitzers	TM 43-0001-28/8-5	Yes	✔	1320-D540
Charge, Propelling, 4.2", M6	---	TM 43-0001-28/8-11	No		
Charge, Propelling, 8", M1	8" howitzer cannons	TM 43-0001-28/8-25	No	✔	1320-D675
GRENADES					
Grenade, Hand, Fragmentation, Impact M26A2	None	TM 43-0001-29/2-3	No		1330-G889
Grenade, Hand, Smoke, HC, AN-M8	None	TM 43-0001-29/2-23	Yes	✔	1330-G930
Grenade, Rifle, Smoke, WP, M19A1	None	TM 43-0001-29/3-7	No		1330-H030

NOTES: BFA - Blank Firing Attachment
PP - Plastic Practice
HE - High Explosive
OFA - Overhead Fire Application
GP - General Purpose
MTD - Mortar Training Device
SCPC - Sub Caliber Practice Cartridge
WP - White Phosphorus
— = No listed information

TABLE 4-3 (Continued)
SUMMARY OF TECHNICAL MANUAL NUMBERS AND DODAC CODES

Mortar System	Munition	Project Number(s)
Improved 81mm Mortar System, M252	Cartridge, 81mm, HE, M821 Cartridge, 81mm, HE, M889 Multi-Option Fuze, M734	1X464601AD227
---	Cartridge, 81mm, Illum., M853A1	1W464601D22700
---	Cartridge, 81mm, Practice, M879	6463 D250
---	Cartridge, 81mm, Practice, M880	2-MU-001-880-001

APPENDIX A. EXPLOSIVES AND DEMOLITIONS REPORT

Chapter 1
Military Explosives

Section I. Demolition Materials

1-1. Characteristics. To be suitable for use in military operations, explosives must have certain properties. Military explosives—

- Should be inexpensive to manufacture and capable of being produced from readily available raw materials.
- Must be relatively insensitive to shock or friction, yet be able to positively detonate by easily prepared initiators.
- Must be capable of shattering and must have the potential energy (high energy output per unit volume) adequate for the purpose of demolitions.
- Must be stable enough to retain usefulness for a reasonable time when stored in temperatures between -80 and +165 degrees Fahrenheit.
- Should be composed of high-density materials (weight per unit volume).
- Should be suitable for use underwater or in damp climates.
- Should be minimally toxic when stored, handled, and detonated.

1-2. Selection of Explosives. Select explosives that fit the particular purpose, based on their relative power. Consider all characteristics when selecting an explosive for a particular demolition project. See Technical Manual (TM) 9-1300-214 for detailed information on military explosives. Table 1-1 (page 1-2) contains significant information regarding many of the explosives described below.

1-3. Domestic Explosives.

a. *Ammonium Nitrate.* Ammonium nitrate is the least sensitive of the military explosives. It requires a booster charge to successfully initiate detonation. Because of its low sensitivity, ammonium nitrate is a component of many composite explosives (combined with a more sensitive explosive). Ammonium nitrate is not suitable for cutting or breaching charges because it has a low detonating velocity. However, because of its excellent cratering affects and low cost, ammonium nitrate is a component of most cratering and ditching charges. Commercial quarrying operations use ammonium nitrate demolitions extensively. Pack ammonium nitrate in an airtight container because it is extremely hygroscopic (absorbs humidity). Ammonium nitrate or composite explosives containing ammonium nitrate are not suitable for underwater use unless packed in waterproof containers or detonated immediately after placement.

b. *Pentaerythrite Tetranitrate (PETN).* PETN is a highly sensitive and very powerful military explosive. Its explosive potential is comparable to cyclonite (RDX) and nitroglycerin. Boosters, detonating cord, and some blasting caps contain PETN. It is also used in composite explosives with trinitrotoluene (TNT) or with nitrocellulose. A PETN-nitrocellulose composite (M118 sheet explosive) is a demolition charge. The PETN explosive is a good underwater demolition because it is almost insoluble in water.

Table 1-1. Characteristics of US demolitions explosives

Name	Applications	Detonation Velocity		RE Factor*	Fume Toxicity	Water Resistance
		M/Sec	Ft/Sec			
Black Powder	Time Fuse	400	1,300	0.55	Dangerous	Poor
Ammonium Nitrate	Cratering Charge	2,700	8,900	0.42	Dangerous	Poor
Amatol 80/20	Bursting Charge	4,900	16,000	1.17	Dangerous	Poor
M1 Dynamite	Demolition Charge	6,100	20,000	0.92	Dangerous	Fair
Detonating Cord	Priming	6,100 to 7,300	20,000 to 24,000	—	Slight	Excellent
TNT	Demolition Charge Composition Explosive	6,900	22,600	1.00	Dangerous	Excellent
Tetrytol 75/25	Demolition Charge	7,000	23,000	1.20	Dangerous	Excellent
Tetryl	Booster Charge Composition Explosive	7,100	23,300	1.25	Dangerous	Excellent
Sheet Explosive M118 and M186	Cutting Charge	7,300	24,000	1.14	Dangerous	Excellent
Pentolite 50/50	Booster Charge Bursting Charge	7,450	24,400	—	Dangerous	Excellent
Nitroglycerin	Commercial Dynamite	7,700	25,200	1.50	Dangerous	Good
Bangalore Torpedo, M1A2	Demolition Charge	7,800	25,600	1.17	Dangerous	Excellent
Shaped Charges M2A3, M2A4, and M3A1	Cutting Charge	7,800	25,600	1.17	Dangerous	Excellent
Composition B	Bursting Charge	7,800	25,600	1.35	Dangerous	Excellent
Composition C4 and M112	Cutting Charge Breaching Charge	8,040	26,400	1.34	Slight	Excellent
Composition A3	Booster Charge Bursting Charge	8,100	26,500	—	Dangerous	Good
PETN	Detonating Cord Blasting Caps Demolition Charges	8,300	27,200	1.66	Slight	Excellent
RDX	Blasting Caps Composition Explosives	8,350	27,400	1.60	Dangerous	Excellent
*TNT equals 1.00						

c. *Cyclotrimethlenetrinitramine (RDX).* RDX is also a highly sensitive and very powerful military explosive. It forms the base charge in the M6 electric and M7 nonelectric blasting caps. When RDX is desensitized, it serves as a subbooster, booster, bursting charge, or demolition charge. The principal use for RDX is in composite explosives, such as Composition A, B, and C explosives. RDX is available commercially under the name cyclonite.

d. *Trinitrotoluene*. TNT is the most common military explosive. It may be in composite form, such as a booster, a bursting, or a demolition charge, or in a noncomposite form. Since TNT is a standard explosive, it is used to rate other military explosives.

e. *Tetryl*. Tetryl is an effective booster charge in its noncomposite form and a bursting or a demolition charge in composite forms. Tetryl is more sensitive and powerful than TNT. However, RDX- and PETN-based explosives, which have increased power and shattering effects, are replacing tetryl and composite explosives containing tetryl.

f. *Nitroglycerin*. Nitroglycerin is one of the most powerful high explosives. Its explosive potential is comparable to RDX and PETN. Nitroglycerin is the explosive base for commercial dynamites. Nitroglycerine is highly sensitive and extremely temperature-sensitive. Military explosives do not use nitroglycerin because of its sensitivity. Do not use commercial dynamites in combat areas.

g. *Black Powder*. Black powder is the oldest-known explosive and propellant. It is a composite of potassium or sodium nitrate, charcoal, and sulfur. Time fuses, some igniters, and some detonators contain black powder.

h. *Amatol*. Amatol is a mixture of ammonium nitrate and TNT. It is a substitute for TNT in bursting charges. Some older bangalore torpedoes use 80-20 amatol (80 percent ammonium nitrate and 20 percent TNT). Because amatol contains ammonium nitrate, it is a hygroscopic compound. Keep any explosives containing amatol in airtight containers. If properly packaged, amatol remains viable for long periods of time, with no change in sensitivity, power, or stability.

i. *Composition A3*. Composition A3 is a composite explosive containing 91 percent RDX and 9 percent wax. The purpose of the wax is to coat, desensitize, and bind the RDX particles. Composition A3 is the booster charge in some newer shaped charges and bangalore torpedoes. High-explosive plastic (HEP) projectiles may also contain Composition A3 as a main charge.

j. *Composition B*. Composition B is a composite explosive containing approximately 60 percent RDX, 39 percent TNT, and 1 percent wax. It is more sensitive than TNT. Because of its shattering power and high rate of detonation, Composition B is the main charge in shaped charges.

k. *Composition B4*. Composition B4 contains 60 percent RDX, 39.5 percent TNT, and 0.5 percent calcium silicate. Composition B4 is the main charge in newer models of bangalore torpedoes and shaped charges.

l. *Composition C4 (C4)*. C4 is a composite explosive containing 91 percent RDX and 9 percent nonexplosive plasticizers. Burster charges are composed of C4. C4 is effective in temperatures between -70 to +170 degrees Fahrenheit; however, C4 loses its plasticity in the colder temperatures.

m. *Tetrytol*. Tetrytol is a composite explosive containing 75 percent tetryl and 25 percent TNT. It is the explosive component in demolition charges. Booster charges require different mixtures of tetryl and TNT. Tetrytol is more powerful than its individual components, is better at shattering than TNT, and is less sensitive than tetryl.

n. *Pentolite*. Pentolite is a mixture of PETN and TNT. Because of its high power and detonating rate, a mixture of 50-50 pentolite (50 percent PETN and 50 percent TNT) makes an effective booster charge in certain models of shaped charges.

o. *Dynamites.*

(1) Standard Dynamite. Most dynamites, with the notable exception of military dynamite, contain nitroglycerin plus varying combinations of absorbents, oxidizers, antacids, and freezing-point depressants. Dynamites vary greatly in strength and sensitivity depending on, among other factors, the percentage of nitroglycerin they contain. Dynamites are for general blasting and demolitions, including land clearing, cratering and ditching, and quarrying.

(2) Military Dynamite. Military dynamite is a composite explosive that contains 75 percent RDX, 15 percent TNT, and 10 percent desensitizers and plasticizers. Military dynamite is not as powerful as commercial dynamite. Military dynamite's equivalent strength is 60 percent of commercial dynamite's. Because military dynamite contains no nitroglycerin, it is more stable and safer to store and handle than commercial dynamite.

1-4. Foreign Explosives.

a. *Composition.* Foreign countries use a variety of explosives, including TNT, picric acid, amatol, and guncotton. Picric acid is similar to TNT, but it also corrodes metals and thus forms extremely sensitive compounds.

WARNING

Do not use picric acid in rusted or corroded metal containers.
Do not handle picric acid. Notify explosive ordnance disposal (EOD) personnel for disposition.

b. *Use.* You may use the explosives of allied nations and those captured from the enemy to supplement standard supplies. Only expert demolitionists should use such explosives and then only according to instructions and directives of theater commanders. Captured bombs, propellants, and other devices may be used with US military explosives for larger demolition projects, such as pier, bridge, tunnel, and airfield destruction. Most foreign explosive blocks have cap wells large enough to receive US military blasting caps. Since foreign explosives may differ from US explosives in sensitivity and force, test shots should be made to determine their adequacy before extensive use or mixing with US-type explosives.

Section II. Service Demolition Charges

1-5. Block Demolition Charges. Block demolition charges are prepackaged, high-explosive charges for general demolition operations, such as cutting, breaching, and cratering. They are composed of the high-explosive TNT, tetrytol, Composition-C series, and ammonium nitrate. Block charges are rectangular in form except for the 40-pound, ammonium-nitrate block demolition charge, military dynamite, and the ¼-pound-TNT block demolition charge, which are all cylindrical in form. The various block charges available are described in the text that follows, as well as Table 1-2. See TM 43-0001-38 for detailed information about demolition charges and accessories.

Table 1-2. Characteristics of block demolition charges

Explosive	Unit (Pounds)	Size (Inches)	Detonation Velocity		RE Factor	Packaging/ Weight[2]
			M/Sec	Ft/Sec		
TNT	0.25	1½ D x 3½ L	6,900	22,600	1.00	200 per Box/55 Lb
	0.50	1¾ x 1¾ x 3¾	6,900	22,600	1.00	96 per Box/53 Lb
	1.00	1¾ x 1¾ x 7	6,900	22,600	1.00	48 per Box/53 Lb
M112 Block[1]	1.25	1 x 2 x 10	8,040	26,400	1.34	30 per Box/40 Lb
M118 Block	2.00	1 x 3 x 12	7,300	24,000	1.14	4 Sheets per Block; 20 per Box/ 42 Lb
M118 Sheet[1]	0.50	¼ x 3 x 12	7,300	24,000	1.14	
M186 Roll	25.00	¼ x 3 x 50 ft	7,300	24,000	1.14	3 per Box/80 Lb
Ammonium Nitrate	43.00	7 x 24	3,400	11,000	0.42	1 per Box/52 Lb
M1 Dynamite	0.50	1¼ D x 8 L	6,100	20,000	0.92	100 per Box/62 Lb

[1]The volume of M112 is 20 cubic inches. The volume of one sheet of M118 is 9 cubic inches.
[2]Packaging weights include packaging material and weight of container.

1-6. TNT Block Demolition Charge.

a. *Characteristics.* TNT block demolitions, shown in Figure 1-1, are available in three sizes (Table 1-2). The ¼-pound block is issued in a cylindrical, waterproof, olive-drab cardboard container. The ½-pound and 1-pound blocks are available in similar rectangular containers. All of the three charges have metal ends with a threaded cap well in one end.

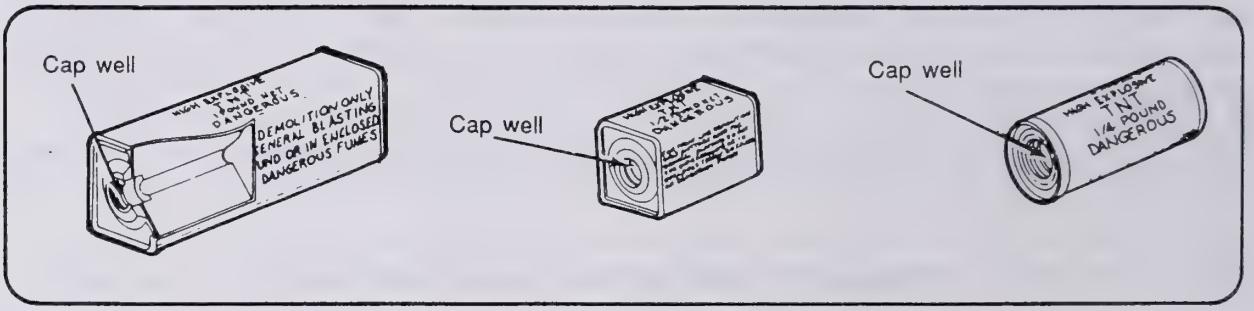

Figure 1-1. TNT block demolition charges

b. *Use.* TNT block demolition charges are effective for all types of demolition work. However, the ¼-pound charge is primarily for training purposes.

c. *Advantages.* TNT demolition charges have a high detonating velocity. They are stable, relatively insensitive to shock or friction, and water resistant. They also are conveniently sized, shaped, and packaged.

d. *Limitations.* TNT block demolition charges cannot be molded and are difficult to use on irregularly shaped targets. TNT is not recommended for use in closed spaces because one of the products of explosion is poisonous gases.

1-7. M112 Block Demolition Charge.

a. *Characteristics.* The M112 block demolition charge consists of 1.25 pounds of C4 packed in an olive-drab, Mylar-film container with a pressure-sensitive adhesive tape on one surface (Figure 1-2). The tape is protected by a peelable paper cover. Table 1-2 (page 1-5) lists additional characteristics of the M112 block.

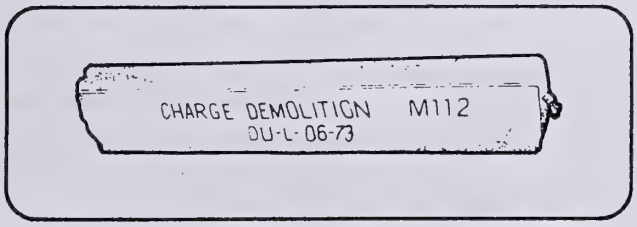

Figure 1-2. M112 block demolition charge

b. *Use.* The M112 block demolition charge is used primarily for cutting and breaching. Because of its high cutting effect and its ability to be cut and shaped, the M112 charge is ideally suited for cutting irregularly shaped targets such as steel. The adhesive backing allows you to place the charge on any relatively flat, clean, dry surface with a temperature that is above the freezing point. The M112 charge is the primary block demolition charge presently in use.

WARNING

Composition C4 explosive is poisonous and dangerous if chewed or ingested; its detonation or burning produces poisonous fumes. Cut all plastic explosives with a sharp steel knife on a nonsparking surface. Do not use shears.

c. *Advantages.* You can cut to shape the M112 block demolition charge to fit irregularly shaped targets. The color of the wrapper helps camouflage the charge. Molding the charge will decrease its cutting effect.

d. *Limitations.* The adhesive tape will not adhere to wet, dirty, rusty, or frozen surfaces.

1-8. M118 Block Demolition Charge.

a. *Characteristics.* The M118 block demolition charge, or *sheet explosive*, is a block of four ½-pound sheets of flexible explosive packed in a plastic envelope (Figure 1-3). Twenty M118 charges and a package of 80 M8 blasting-cap holders are packed in a wooden box. Each sheet of the explosive has a pressure-sensitive adhesive tape attached to one surface. Table 1-2 (page 1-5) lists additional characteristics for the M118 charge.

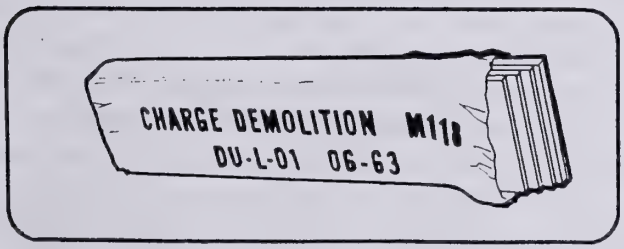

Figure 1-3. M118 block demolition charge

b. *Use.* The M118 charges are designed for cutting, especially against steel targets. The sheets of explosive are easily and quickly applied to irregular and curved surfaces and are easily cut to any desired dimension. The M118 charge is effective as a small breaching charge but, because of its high cost, it is not suitable as a bulk explosive charge.

c. *Advantages.* The flexibility and adhesive backing of the sheets allow application to a large variety of targets. You can cut the ½-pound sheets to any desired dimension and apply them in layers to achieve the desired thickness. The M118 charge is not affected by water, making it acceptable for underwater demolitions.

d. *Limitations.* The adhesive tape will not adhere to wet, dirty, rusty, or frozen surfaces.

1-9. M186 Roll Demolition Charge.

a. *Characteristics.* The M186 roll demolition charge, shown in Figure 1-4, is identical to the M118 block demolition charge except that the sheet explosive is in roll form on a 50-foot, plastic spool. Each foot of the roll provides approximately a half pound of explosive. Included with each roll are 15 M8 blasting cap holders and a canvas bag with carrying strap. Table 1-2 (page 1-5) lists additional characteristics for the M186 charge.

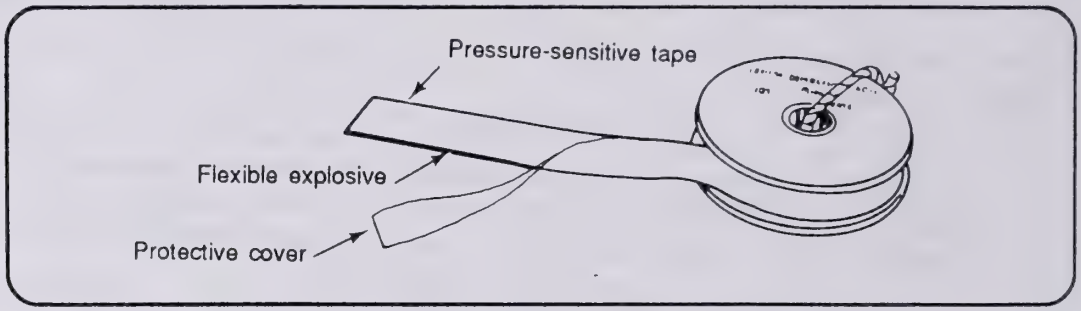

Figure 1-4. M186 roll demolition charge

b. *Use.* Use the M186 roll demolition charge in the same manner as the M118 block demolition charge. The M186 charge is adaptable for demolishing targets that require the use of flexible explosives in lengths longer than 12 inches.

c. *Advantages.* The M186 roll demolition charge has all the advantages of the M118 block demolition charge. You can cut the M186 charge to the exact lengths desired.

d. *Limitations.* The adhesive backing will not adhere to wet, dirty, rusty, or frozen surfaces.

1-10. Forty-Pound, Ammonium-Nitrate Block Demolition Charge

a. *Characteristics.* Figure 1-5 (page 1-8) shows the 40-pound, ammonium-nitrate block demolition charge or cratering charge. It is a watertight, cylindrical metal container with approximately 30 pounds of an ammonium-nitrate-based explosive and 10 pounds of TNT-based explosive booster in the center, next to the priming tunnels. The two priming tunnels are located to the outside of the container, midway between the ends. One tunnel serves as a cap well for priming the charge with an M6 electric or M7 nonelectric military blasting cap. The other tunnel serves as a priming path, with the detonating cord passing through the tunnel and knotted at the end. There is a cleat between the tunnels to secure the time blasting fuse, electrical firing wire, or detonating cord. There is a metal ring on the top of the container for lowering the charge into its hole. Table 1-2 (page 1-5) lists additional characteristics for the 40-pound, ammonium-nitrate block demolition charge.

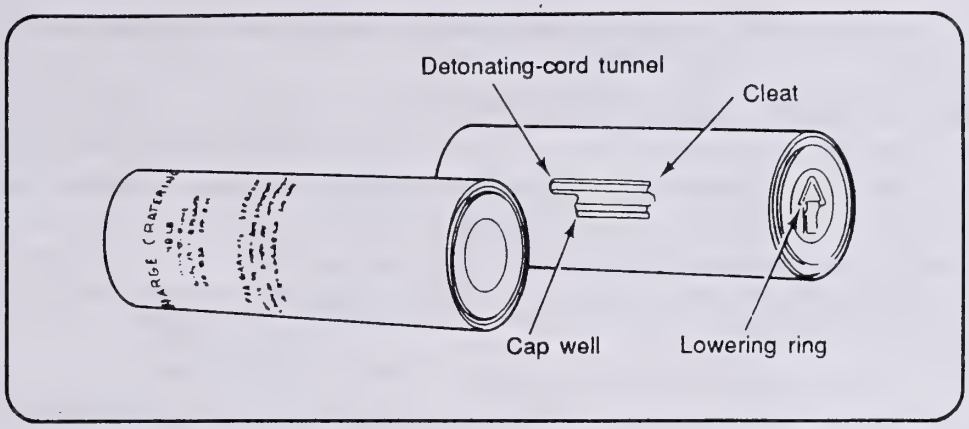

Figure 1-5. Forty-pound, ammonium-nitrate cratering charge

b. *Use.* This charge is suitable for cratering and ditching operations. Its primary use is as a cratering charge, but it also is effective for destroying buildings, fortifications, and bridge abutments.

c. *Advantages.* The size and shape of this charge make it ideal for cratering operations. It is inexpensive to produce compared to other explosives.

d. *Limitations.* Ammonium nitrate is hygroscopic. When wet, it will not detonate. To ensure detonation, use metal containers showing no evidence of water damage. Detonate all charges placed in wet or damp boreholes as soon as possible.

1-11. M1 Military Dynamite.

a. *Characteristics.* M1 military dynamite is an RDX-based composite explosive containing no nitroglycerin (Figure 1-6). M1 dynamite is packaged in ½-pound, paraffin-coated, cylindrical paper cartridges, which have a nominal diameter of 1.25 inches and a nominal length of 8 inches. Table 1-2 (page 1-5) lists additional characteristics for M1 military dynamite.

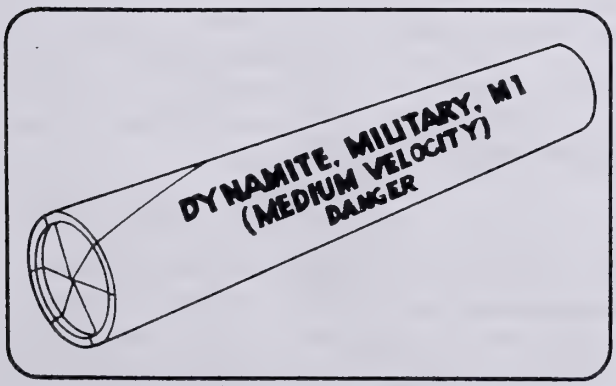

Figure 1-6. M1 military dynamite

b. *Use.* M1 dynamite's primary uses are military construction, quarrying, ditching, and service demolition work. It is suitable for underwater demolitions.

c. *Advantages.* M1 dynamite will not freeze or perspire in storage. The M1 dynamite's composition is not hygroscopic. Shipping containers do not require turning during storage. M1 dynamite is safer to store, handle, and transport than 60-percent commercial dynamite. Unless essential, do not use civilian dynamite in combat areas.

d. *Limitations.* M1 dynamite is reliable underwater only for 24 hours. Because of its low sensitivity, pack sticks of military dynamite well to ensure complete detonation of the charge. M1 dynamite is not efficient as a cutting or breaching charge.

Section III. Special Demolition Charges and Assemblies

1-12. Shaped Demolition Charge. The shaped demolition charge used in military operations is a cylindrical block of high explosive. It has a conical cavity in one end that directs the cone-lining material into a narrow jet to penetrate materials (Figure 1-7). This charge is not effective underwater, since any water in the conical cavity will prevent the high-velocity jet from forming. To obtain maximum effectiveness, place the cavity at the specified standoff distance from the target, and detonate the charge from the exact rear center, using only the priming well provided. Never dual prime a shaped charge.

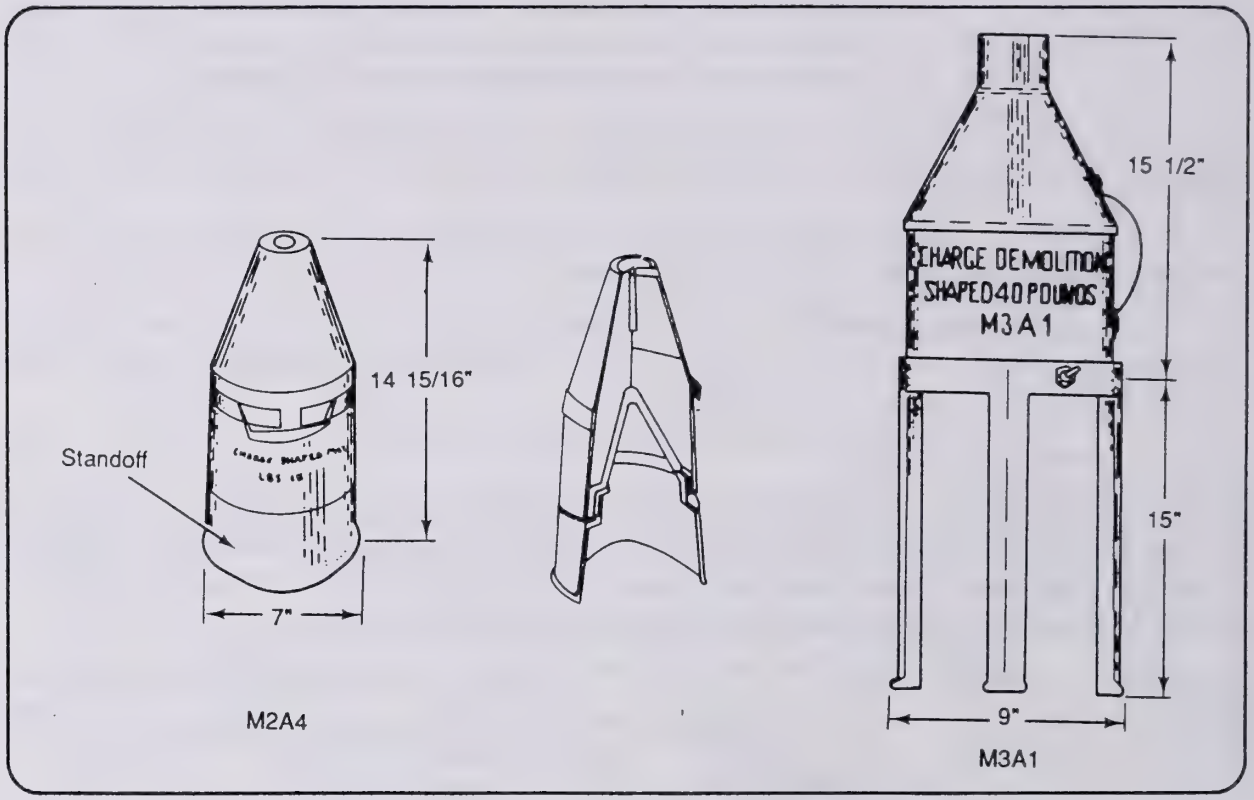

Figure 1-7. Shaped charges

a. *Characteristics.*

(1) Fifteen-Pound, M2A4 Shaped Demolition Charge. The M2A4 charge contains a 0.11-pound (50 gram) booster of Composition A3 and a 11.5-pound main charge of Composition B. It is packaged three charges per wooden box (total weight is 65 pounds). This charge has a moisture-resisting, molded-fiber container. A cylindrical fiber base slips onto the end of the charge to provide a 6-inch standoff distance. The cavity liner is a cone of glass. The charge is $14^{15}/_{16}$ inches high and 7 inches in diameter, including the standoff.

(2) Forty-Pound, M3A1 Shaped Demolition Charge. The M3A1 charge contains a 0.11-pound (50 gram) booster of Composition A3 and a 29.5-pound main charge of Composition B. It is packaged one charge per box (total weight is 65 pounds). The charge is in a metal container. The cone liner also is made of metal. A metal tripod provides a 15-inch standoff distance. The charge is 15½ inches high and 9 inches in diameter, not including standoff.

b. *Use.* A shaped demolition charge's primary use is for boring holes in earth, metal, masonry, concrete, and paved and unpaved roads. Its effectiveness depends largely on its shape, composition, and placement. Table 1-3, lists the penetrating capabilities of various materials and the proper standoff distances for these charges.

Table 1-3. Characteristics of boreholes made by shaped charges

Material	Specifications	M2A4 Shaped Charge (15-Pound)*	M3A1 Shaped Charge (40-Pound)**
Armor plate	Penetration	12.00 in	At least 20.00 in
	Average hole diameter	1.50 in	2.50 in
Reinforced concrete	Maximum wall thickness	36.00 in	60.00 in
	Penetration depth in thick walls	30.00 in	60.00 in
	Average hole diameter	2.75 in	3.50 in
	Minimum hole diameter	2.00 in	2.00 in
Concrete pavement (10-inch with 21-inch rock base course)	Optimum standoff	42.00 in	60.00 in
	Minimum penetration depth	44.00 in	71.00 in
	Maximum penetration depth	91.00 in	109.00 in
	Minimum hole diameter	1.75 in	6.75 in
Concrete pavement (3-inch with 24-inch rock base course)	Optimum standoff	42.00 in	—
	Minimum penetration depth	38.00 in	—
	Maximum penetration depth	90.00 in	—
	Minimum hole diameter	3.75 in	—
Permafrost	Hole depth (30-inch standoff)	72.00 in	—
	Hole depth (42-inch standoff)	60.00 in	—
	Hole depth (50-inch standoff)	—	72.00 in
	Hole diameter (42-inch standoff)	1.50 to 6.00 in	—
	Hole diameter (50-inch standoff)	—	5.00 to 8.00 in
	Hole diameter (normal standoff)	4.00 to 30.00 in	7.00 to 30.00 in
Ice	Hole depth (42-inch standoff)	7.00 ft	12.00 ft
	Hole diameter (42-inch standoff)	3.50 in	6.00 in
Soil	Hole depth (30-inch standoff)	7.00 ft	—
	Hole depth (48-inch standoff)	—	7.00 ft
	Hole diameter (30-inch standoff)	7.00 in	—
	Hole diameter (48-inch standoff)	—	14.50 in
Graveled roads	Hole depth (30-inch standoff)	7.00 ft	—
	Hole depth (48-inch standoff)	—	9.00 ft
	Hole diameter (30-inch standoff)	7.00 in	—
	Hole diameter (48-inch standoff)	—	7.00 in

*A dash in the M2A4 Shaped Charge column indicates that a M3A1 shaped charge is required.
**A dash in the M3A1 Shaped Charge column indicates that a M2A4 shaped charge is sufficient.

c. *Special Precautions.* To achieve the maximum effectiveness of shaped charges—

- Center the charge over the target point.
- Align the axis of the charge with the direction of the desired hole.
- Use the pedestal to obtain the proper standoff distance.

- Suspend the charge at the proper height on pickets or tripods, if the pedestal does not provide the proper standoff distance.
- Remove any obstruction in the cavity liner or between the charge and the target.

1-13. M183 Demolition Charge Assembly.

a. *Characteristics.* The M183 demolition charge assembly or *satchel charge* consists of 16 M112 (C4) demolition blocks and 4 priming assemblies. It has a total explosive weight of 20 pounds. The demolition blocks come in two bags, eight blocks per bag. The two bags come in an M85 canvas carrying case. Two M85 cases come in a wooden box 17⅛ by 11½ by 12½ inches. Each priming assembly consists of a 5-foot length of detonating cord with an RDX booster crimped to each end and a pair of M1 detonating-cord clips for attaching the priming assembly to a detonating cord ring or line main.

b. *Use.* The M183 assembly is used primarily for breaching obstacles or demolishing structures when large demolition charges are required (Figure 1-8). The M183 charge also is effective against smaller obstacles, such as small dragon's teeth.

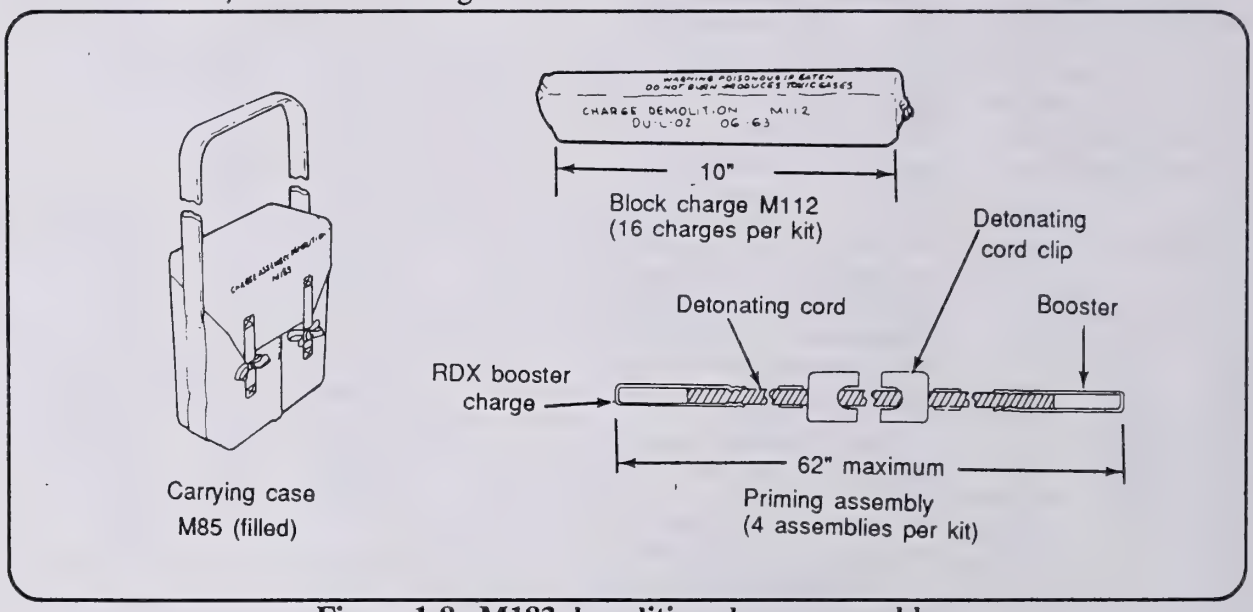

Figure 1-8. M183 demolition charge assembly

c. *Detonation.* Detonate the M183 demolition charge assembly with a priming assembly and an electric or a nonelectric blasting cap or by using a detonating-cord ring main attached by detonating cord clips.

1-14. M1A2 Bangalore-Torpedo Demolition Kit.

a. *Characteristics.* Each kit consists of 10 loading assemblies, 10 connecting sleeves, and 1 nose sleeve. The loading assemblies, or torpedoes, are steel tubes 5 feet long and 2⅛ inches in diameter, grooved, and capped at each end (Figure 1-9, page 1-12). The torpedoes have a 4-inch, Composition A3 booster (½ pound each) at both ends of each 5-foot section. The main explosive charge is 10½ pounds of Composition B4. The kit is packaged in a 60¾- by 13¾- by 4⁹⁄₁₆-inch wooden box and weighs 198 pounds.

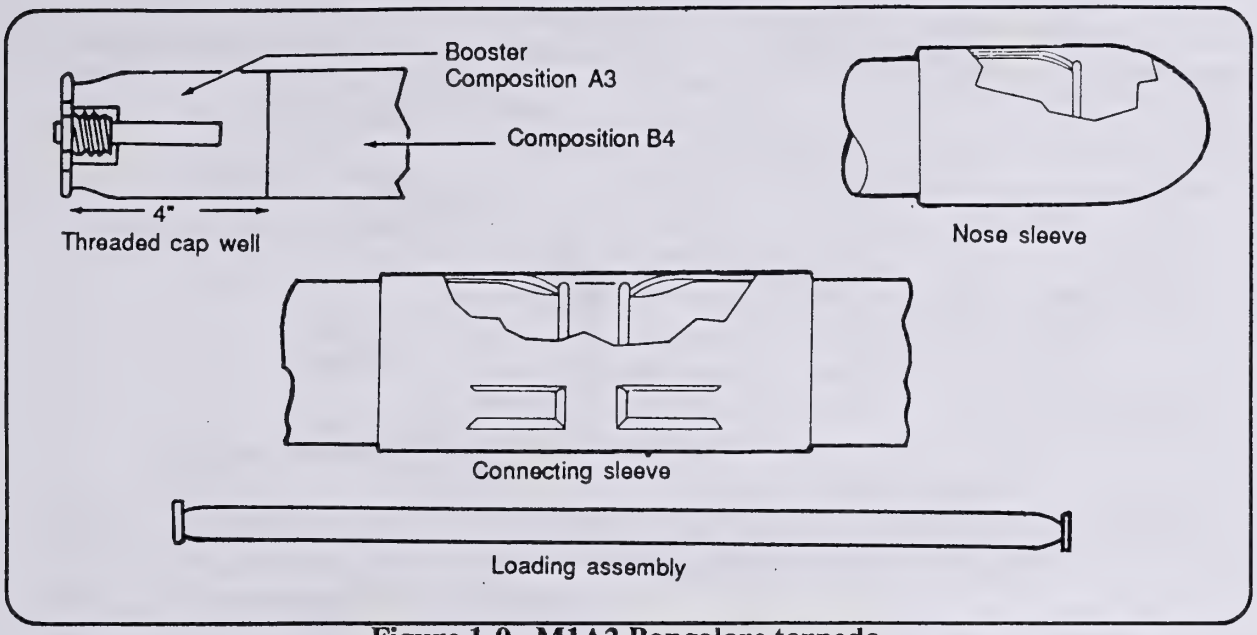

Figure 1-9. M1A2 Bangalore torpedo

b. *Use.* The primary use of the torpedo is clearing paths through wire obstacles and heavy undergrowth. It will clear a 3- to 4-meter-wide path through wire obstacles.

> **WARNING**
>
> **The Bangalore torpedo may detonate a live mine when being placed. To prevent detonation of the torpedo during placement, attach the nose sleeve to a fabricated dummy section (approximately the same dimensions as a single Bangalore section) and place the dummy section onto the front end of the torpedo.**

c. *Assembly.* All sections of the torpedo have threaded cap wells at each end. To assemble two or more sections, press a nose sleeve onto one end of one tube, and then connect successive tubes, using the connecting sleeves provided until you have the desired length. The connecting sleeves make rigid joints. The nose sleeve allows the user to push the torpedo through entanglements and across the ground.

d. *Detonation.* The recommended method to detonate the torpedo is to prime the torpedo with eight wraps of detonating cord and attach two initiation systems for detonation. Another method for priming the Bangalore torpedo is by inserting an electric or a nonelectric blasting cap directly into the cap well. Do not move the torpedo after it has been prepared for detonation. You may wrap the end with detonating cord prior to placing it, but do not attach the blasting caps until the torpedo is in place.

1-15. M180 Demolition Kit (Cratering).

a. *Characteristics.* This kit consists of an M2A4 shaped charge, a modified M57 electrical firing device, a warhead, a rocket motor, a tripod, and a demolition circuit (Figure 1-10). The shaped charge, firing device, and warhead are permanently attached to the launch leg of the tripod. The rocket motor and the demolition circuit (packed in a wooden subpack) are shipped separately. The

kit weighs approximately 165 pounds (74.25 kilograms). TM 9-1375-213-12-1 provides the assembly procedures, operational description, and maintenance instructions for the M180 kit.

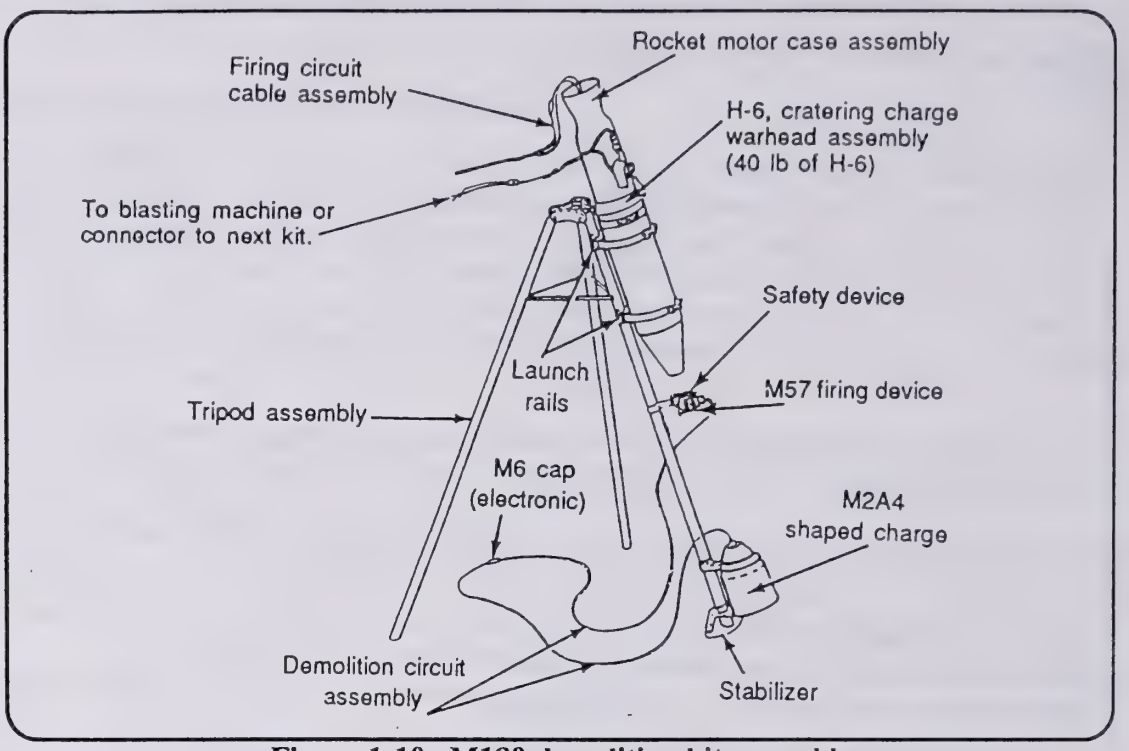

Figure 1-10. M180 demolition kit assembly

b. *Use.* The M180 is designed to produce a large crater in compacted soil or road surfaces, but not in reinforced concrete, arctic tundra, bedrock, or sandy soil. The charge produces a crater in two stages. The shaped charge blows a pilot hole in the surface. Then, the rocket-propelled warhead enters the hole and detonates, enlarging the pilot hole. Up to five kits can be set up close together and fired simultaneously to produce an exceptionally large crater. Up to 15 kits can be widely spaced and fired simultaneously for airfield pocketing.

WARNING

Regardless of the number of kits used, the minimum safe distances for the M180 cratering kit are 1,200 meters for unprotected personnel and 150 meters for personnel under overhead cover.

c. *Detonation.* When firing the M180, use the M34 50-cap blasting machine.

Section IV. Demolition Accessories

1-16. Time Blasting Fuse. The time blasting fuse transmits a delayed spit of flame to a nonelectric blasting cap. The delay allows the soldier to initiate a charge and get to a safe distance before the explosion. There are two types of fuses: the M700 time fuse and safety fuse. Although safety fuse is not often employed, it is still available.

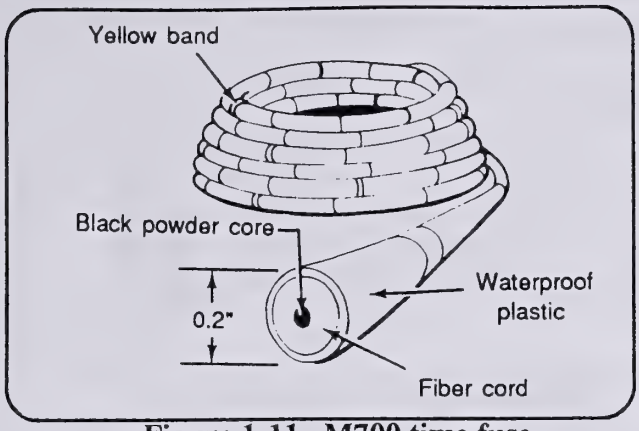

Figure 1-11. M700 time fuse

a. *M700 Time Fuse.* The M700 fuse is a dark green cord, 0.2 inches in diameter, with a plastic cover (Figure 1-11). The M700 burns at an approximate rate of 40 seconds per foot. However, test the burning rate as outlined in Chapter 2 (paragraph 2-1b(1), page 2-2). Depending on the date of manufacture, the cover may be smooth or have single yellow bands around the outside at 12- or 18-inch intervals and double yellow bands at 60- or 90-inch intervals. These bands accommodate hasty measuring. The outside covering becomes brittle and cracks easily in arctic temperatures. The M700 time fuse is packaged in 50-foot coils, two coils per package, five packages per sealed container, and eight containers (4,000 feet) per wooden box (30⅛ by 15⅛ by 14⅞ inches). The total package weighs 94 pounds.

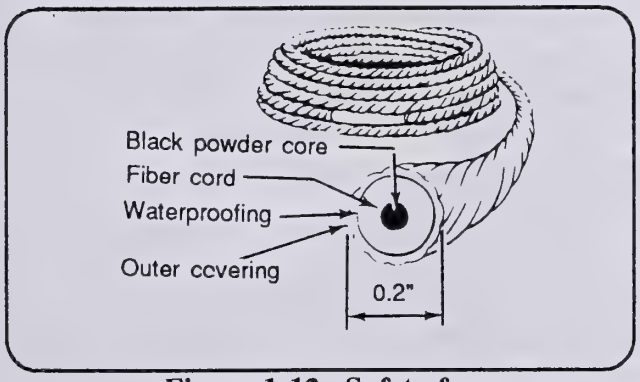

Figure 1-12. Safety fuse

b. *Safety Fuse.* Safety fuse consists of black powder tightly wrapped with several layers of fiber and waterproofing material. The outside covering becomes brittle and cracks easily in arctic temperatures. The burning rate may vary for the same or different rolls (30 to 45 seconds per foot) under different atmospheric and climatic conditions. This fuse may be any color, but orange is the most common (Figure 1-12). Test each roll in the area where the charge will be placed (paragraph 2-1b(1), page 2-2). Since safety fuse burns significantly faster underwater, test it underwater before preparing an underwater charge. Safety fuse is packaged in 50-foot coils, two coils per package, and 30 packages (3,000 feet) per wooden box (24¾ by 15¾ by 12½ inches). The total package weighs 93.6 pounds.

1-17. Detonating Cord.

a. *Characteristics.* The American, British, Canadian, and Australian (ABCA) Standardization Program recognizes this Type 1 detonating cord as the standard detonating cord. Detonating cord (Figure 1-13) consists of a core of high explosive (6.4 pounds of PETN per 1,000 feet) wrapped in a reinforced and waterproof olive-drab plastic coating. This detonating cord is approximately 0.2 inches in diameter, weighs approximately 18 pounds per 1,000 feet, and has a breaking strength of 175 pounds. Detonating cord is functional in the same temperature range as plastic explosive, although the cover becomes brittle at lower temperatures. Moisture can penetrate the explosive filling to a maximum distance of 6 inches from any cut or break in the coating. Water-soaked detonating cord will detonate if there is a dry end to allow initiation. For this reason, cut off and discard the first 6 inches of any new or used detonating cord that nonelectric blasting caps are crimped to. Also, leave a 6-inch overhang when making connections or when priming charges.

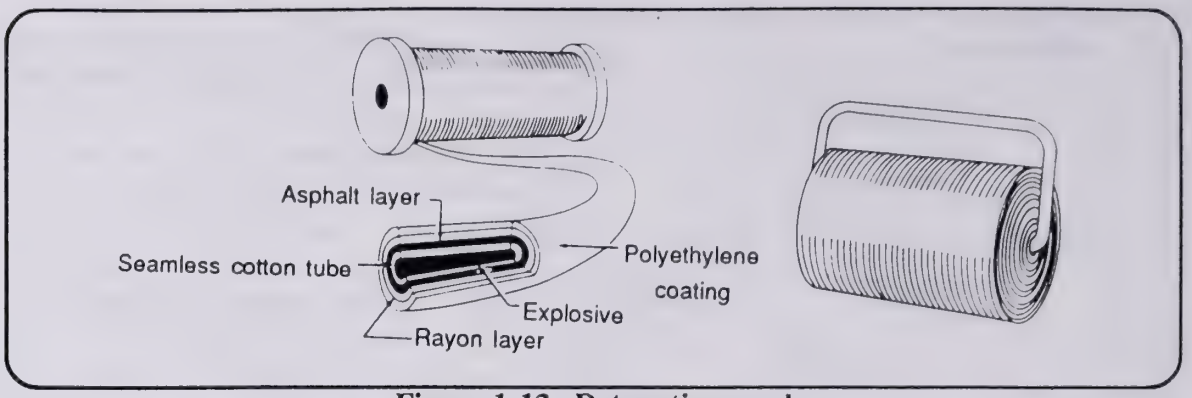

Figure 1-13. Detonating cord

b. *Use.* Use detonating cord to prime and detonate other explosive charges. When the detonating cord's explosive core is initiated by a blasting cap, the core will transmit the detonation wave to an unlimited number of explosive charges. Chapter 2 explains the use of detonating cord for these purposes.

c. *Precautions.* Seal the ends of detonating cord with a waterproof sealant when used to fire underwater charges or when charges are left in place several hours before firing. If left for no longer than 24 hours, a 6-inch overlap will protect the remainder of a line from moisture. Avoid kinks or sharp bends in priming, as they may interrupt or change the direction of detonation and cause misfires. Avoid unintended cross-overs of the detonating cord where no explosive connection is intended. To avoid internal cracking do not step on the detonating cord.

1-18. Blasting Caps. Blasting caps are for detonating high explosives. There are two types of blasting caps: electric and nonelectric. They are designed for insertion into cap wells and are also the detonating element in certain firing systems and devices. Blasting caps are rated in power, according to the size of their main charge. Commercial blasting caps are normally Number 6 or 8 and are for detonating the more sensitive explosives, such as commercial dynamite and tetryl. Special military blasting caps (M6 electric and M7 nonelectric) ensure positive detonation of the generally less sensitive military explosives. Their main charge is approximately double that of commercial Number 8 blasting caps. Never carry blasting caps loose or in uniform pockets where they are subject to shock. Separate blasting caps properly. Never store blasting caps with other explosives. Do not carry blasting caps and other explosives in the same truck except in an emergency (paragraph 6-11, page 6-10).

WARNING

Handle military and commercial blasting caps carefully, as both are extremely sensitive and may explode if handled improperly. Do not tamper with blasting caps. Protect them from shock and extreme heat.

a. *Electric Blasting Caps.* Use electric blasting caps when a source of electricity, such as a blasting machine or a battery, is available. Both military and commercial caps may be used. Military caps (Figure 1-14, page 1-6) operate instantaneously. Commercial caps may operate instantaneously or have a delay feature. The delay time of commercial caps for military applications ranges from 1 to 1.53 seconds. Electric caps have lead wires of various lengths. The most common lead length is 12 feet. Electric caps require 1.5 amperes of power to initiate. The standard-issue cap

is the M6 special electric blasting cap. TM 43-0001-38 gives additional information on blasting caps.

WARNING

Do not remove the short-circuiting shunt until ready to test the cap. Doing this prevents accidental initiation by static electricity. If the cap has no shunt, twist the lead's bare ends together with at least three 180-degree turns to provide a shunting action.

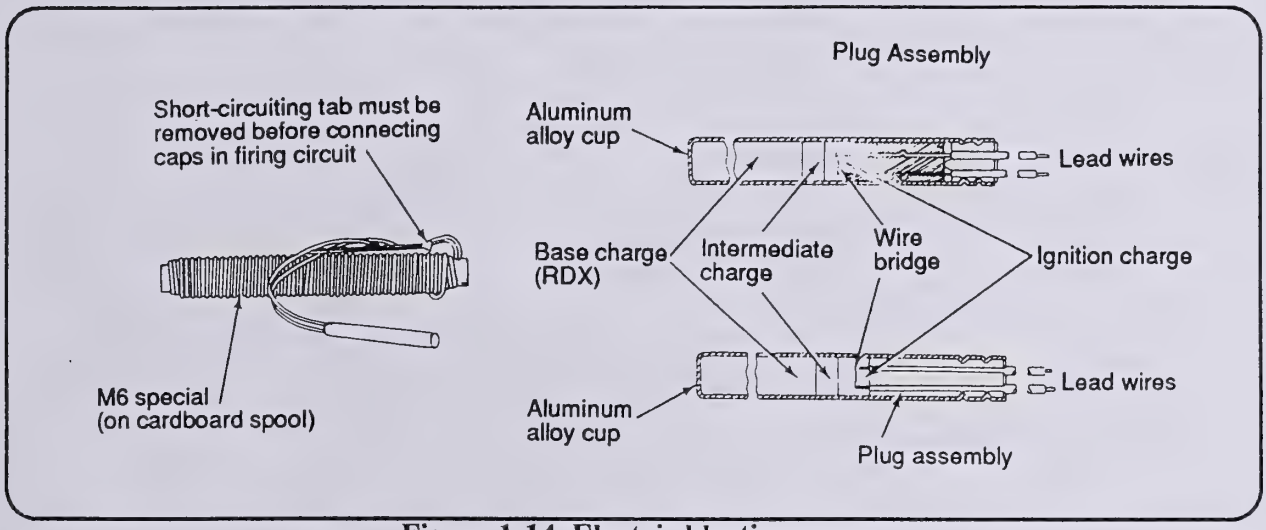

Figure 1-14. Electric blasting caps

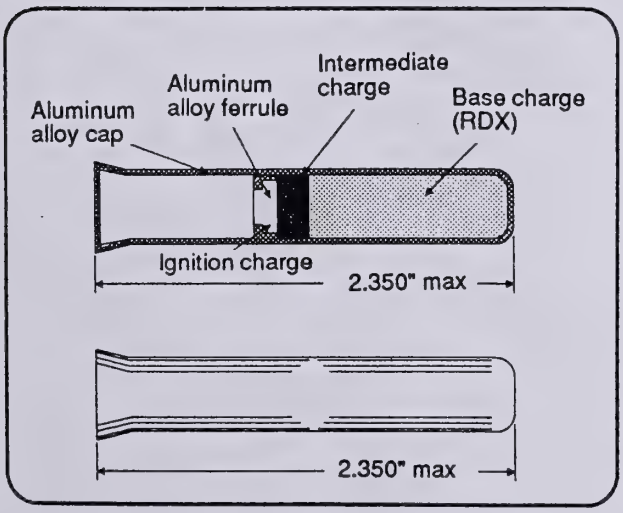

Figure 1-15. Nonelectric blasting cap

b. *Nonelectric Blasting Caps.* Initiate these caps with time-blasting fuse, a firing device, or detonating cord (Figure 1-15). Avoid using nonelectric blasting caps to prime underwater charges because the caps are hard to waterproof. If necessary, waterproof nonelectric blasting caps with a sealing compound. The M7 special nonelectric blasting cap is the standard issue. The open end of the M7 special nonelectric blasting cap is flared to allow easy insertion of the time fuse. TM 43-0001-38 gives additional information on blasting caps.

1-19. M1A4 Priming Adapter. The M1A4 priming adapter is a plastic, hexagonal-shaped device, threaded to fit threaded cap wells. The shoulder inside the threaded end will allow time blasting fuse and detonating cord to pass, but the shoulder is too small to pass a military blasting cap. To accommodate electric blasting caps, the adapter has a lengthwise slot that permits blasting cap lead wires to be quickly and easily installed in the adapter (Figure 1-16).

APPENDIX B. TELEPHONE CONVERSATIONS AND INTERVIEW LOGS

Telephone Call Summary Sheet

To: Tom Walch
Of: US Army, Picatiny Arsenal
Phone: 201/724-6463
By: Mark Gerath, Ogden Environmental
Re: Change in Munitions Quality Over the Last 40 to 50 Years
Date: July 1, 1997

Mr. Walch works in the development of mortar rounds. He indicated that little change would be expected in the composition of high explosives and casing materials of either mortars or gun munitions since the World War II era. For example, Composition B has been in general employment for approximately 60 years. Similarly, the chemical composition of hand grenades would also be expected to be relatively stable. He said he understands that some state National Guard units still train with hand grenades of World War II vintage. Finally, primer materials would also be expected to be maintained through the years of major activity at MMR.

He believes that differences are likely in the propellants used for munitions. Some of these differences will depend on manufacturer which may change through the years. Other changes have occurred as the Army has required greater range in its munitions and therefore greater pressures are necessary within the weapon barrel.

Some tracer, light, and smoke generating materials are also likely to have changed. While red and white phosphorous has been used consistently through the years other materials are also being phased in and out through time. He noted that the rate of use of these materials is likely to be relatively low.

Telephone Call Summary Sheet

To: Lillianna Suarez
Of: US Army, Picatiny Arsenal
Phone: 201/724-6089
By: Mark Gerath, Ogden Environmental
Re: Change in Munitions Quality Over the Last 40 to 50 Years
Date: June 25, 1997

Ms. Suarez is a project engineer specializing in environmental applications. I called to inquire about general levels of change in munitions since 1940. In particular, are current munitions likely to be similar in chemical quality to those used previously at MMR. Ms. Suarez works with small arms munitions; she said a colleague of hers (Tom Walch 201/724-6463) might know more about mortars and howitzer munitions. She believed that despite changes in the caliber thorough the years, the composition of the projectiles is very likely to be pretty constant. She asked that I confirm this with Wade Bunting (201/724-6040). The exception to this is more recent munitions that are designed to have better penetration capacity. She said it was unlikely that such munitions would be used in training applications because of their high cost.

Telephone Call Summary Sheet

To: Wade Bunting
Of: US Army, Picatiny Arsenal
Phone: 201/724-6040
By: Mark Gerath, Ogden Environmental
Re: Change in Munitions Quality Over the Last 40 to 50 Years
Date: June 25, 1997

Ms. Bunting confirmed that standard issue munitions, as would likely be used in training ranges, would have changed little in composition since the 1940s. This applies to both regular projectiles as well as tracer bullets. As an example, 30 caliber bullets used in the 1940s and 7.62 mm bullets used in the 1950s both weigh 150 grains and have a core of 98% lead and 2% antimony. The size of the cartridge varies between the two bullets. The 5.56 mm bullet adopted in the 1960s weighs either 55 or 62 grains but has the same composition.

He was less sure about the composition of the propellent used throughout this period. He said he would investigate this issue and get back to me. He will also look into changes in speciality rounds. He will find a point of contact for me to discuss changes in artillery and mortar rounds.

APPENDIX C. MIDAS DATABASE DOWNLOAD

The codes contained within the MIDAS database tend to be rather ambiguous (MIDAS Technical Assistance Coordinators, Lisa Anderson and Jim Yenny). A specific code can mean different things in different contexts. In some cases, even within a specific context, a code can have multiple meanings. Thus, the database is designed for relatively sophisticated users who will be able to impart some expertise in the interpretation of the coded information. The following is brief description of the fields contained within MIDAS:

- DODAC designations are used exclusively for ordering munitions by the Army - the alphabetic assignments in the code have no particular meaning with regard to composition but are related to the class of munition (e.g., small arms, grenades, etc.)
- The "nomenclature " field consists of three portions that define: (1) munition type (e.g., projectile, cartridge, case); munition form, size, and shape (e.g., 556 mm ball); and the model number (e.g., M193).
- TGCS (type/grade/class/style) are distinguishing characteristics of the particular munition. This field can have up to four separate subfields separated by slashes (i.e., /). This field was recently adopted by MIDAS and many of the field contents are difficult to interpret without detailed knowledge of the munition.
- Factor and factored weight refer to the number of, and total weight of, component(s) of a given munition. For example, a lead bullet may have one slug (Factor = 1) weighing 0.015 lb yielding a factored weight of 0.015 lb. On the other hand, a cluster bomb may have 100 of lead clusters (Factor = 100) each weighing 0.015 lb for a total weight of 1.5 lb (Factored weight = 1.5 lb).

DODAC	Type	Quantity	Search	Printout	Page(s)
		1989			
A011	12 GAGE 00 BUCKSHOT	1170	Not Found	No	
A066	CTG. 5.56MM BALL M193	317123	CD ROM	Yes	2
A068	CTG. 5.56MM TR M196	2260	CD ROM	YES	2
A071	CTG. 5.56MM BALL M193	30922	CD ROM	YES	2
A080	CTG. 5.56MM BLK M200	449841	CD ROM	YES	1
A086	.22 CALIBER BALL L.R.	36325	Not Found	No	
A091	.22 CALIBER BALL MATCH GRADE	15000	Not Found	No	
A093	.22 CALIBER BALL MATCH	5000	Not Found	No	
A111	CTG. 7.62MM BLK M82	146746	CD ROM	YES	1
A130	CTG. 7.62MM NATO BALL M80	420	CD ROM	YES	1
A131	CTG. 7.62MM 4 BALL M59/M80/1 TR M62 LNKD	56132	CD ROM	YES	2
A136	CTG. 7.62MM 4 NATO SPEC BALL M118	2428	CD ROM	YES	2
A143	CTG. 7.62MM 4 NATO BALL M80 LNKD	155929	CD ROM	YES	2
A363	CTG. 9MM BALL M882	4000	CD ROM	YES	1
A400	CTG. CAL .38 SPEC BALL M41	4400	CD ROM	YES	2
A404	.38 CALIBER BALL (WADCUTTER)	6601	Not Found	No	
A475	CTG. CAL .45 BALL M1911	80220	CD ROM	YES	2
A483	CTG. CAL .45 BALL MATCH M1911	11000	CD ROM	YES	2
A555	CTG. CAL .50 BALL M2 LNKD	7860	CD ROM	YES	2
A555	CTG. CAL .50 BALL M33 LNKD		CD ROM	YES	2
A557	CTG. CAL .50 4 BALL M33/1 TR M17 LNKD M9	8212	CD ROM	YES	4
A598	CTG. CAL .50 BLK M1A1 LNKD	5397	CD ROM	YES	2
A680	22 MM SUBCALIBER CHARGE 1	41	Not Found	No	
A682	22 MM SUBCALIBER CHARGE 3	30	Not Found	No	
A683	22 MM SUBCALIBER CHARGE 4	173	Not Found	No	
Notes:					
DODAC	Department of Defense Activity Code				
Quantity	Quantity of ammunition expended by type in 1989				
Search	Search through the MIDAS database in CD ROM & Internet				
LIST OF ACRONYMS AND ABBREVIATIONS					
BLK	BLANK				
CAL	CALIBER				
CTG	CARTRIDGE				
LNKD	LINKED				
TR	TRACER				

USADACS - MIDAS DETAILED STRUC[illegible] FOR A MUNITION (LESS BULK ITEMS)

06/09/97

Nomenclature: CTG 5.56MM BALL M193

NSN: 1305009263970 DODIC: A066 Reported Weight: 182.0000 GR (0.0260 LB)

DRAWING #	NOMENCLATURE	TYPE	SPECIFICATION	TGCS	-- REPORTED --- WEIGHT	UNIT	FACTOR	FACTORED WEIGHT(LB)
10523632	CTG 5.56MM BALL M193	Munition	MIL-C-9963		182.0000	GR	1.0000	
10523632	CTG 5.56MM BALL M193	Component	MIL-C-9963		182.0000	GR	1.0000	
10524200	CASE (CU ALLOY)	Part	MIL-C-50	///260/ASPHALT/	95.0000	GR	1.0000	0.01357200
11820451	CASE (CU ALLOY) (ALT)	Part	MIL-C-50		115.0000	GR	1.0000	
	PROP WC844 (PROP WC844)	Part	10542743		28.5000	GR	1.0000	0.00407200
	NC (N 13.15%) (83.22%)	Compound	MIL-N-244					
	GRAPHITE (0.40%)	Compound	MIL-G-155					
	NA SULFATE (0.50%)	Compound	MIL-S-50004					
	CA CARBONATE (0.25%)	Compound	MIL-C-293					
	NITROGLYCERIN (10.00%)	Compound	MIL-N-246					
	DIPHENYLAMINE (1.13%)	Compound	MIL-D-98					
	DIBUTYLPHTHALATE (4.50%)	Compound	MIL-D-218					
	PROP CMR 170 (PROP CMR 170)	Part	11735682		25.8000	GR	1.0000	0.00368600
	NITROGLYCERIN (5.50%)	Compound	MIL-N-246					
	GRAPHITE (0.50%)	Compound	MIL-G-155					
	ETHYL CENTRALITE (2.25%)	Compound	MIL-E-255					
	METHYL CENTRALITE (2.25%)	Compound	MIL-M-19719					
	K SULFATE (0.55%)	Compound	MIL-P-193					
	NC (N 13.15%) (88.95%)	Compound	MIL-N-244					
10534279	PRIMER #41	Component	MIL-P-46610		4.0000	GR	1.0000	
10534280	CUP PRIMER (CU ALLOY)	Part	MIL-C-50	//260///	2.5000	GR	1.0000	0.00035700
10534282	DISC (PAPER SEALING)	Part	MIL-P-60169	/1////	0.0100	GR	1.0000	0.00000100
10534281	ANVIL (CU ALLOY)	Part	MIL-C-50	//260///	0.7000	GR	1.0000	0.00010000
10534283	PELLET BOOSTER (PRIMER COMP FA-956)	Part	10522388		0.3900	GR	1.0000	0.00005600
	SB SULFIDE (15.00%)	Compound	MIL-A-159	///1,2 OR 3//				
	BA NITRATE (32.00%)	Compound	MIL-B-162	///1//				
	PB STYPHNATE (37.00%)	Compound	MIL-L-757					
	TETRACENE (4.00%)	Compound	MIL-T-46938					
	PETN (5.00%)	Compound	MIL-P-387	///2//				
	AL PWDR (7.00%)	Compound	MIL-A-512	/3/F/6//				
10524197	BULLET M193	Component			56.0000	GR	1.0000	
12903080	JACKET POINTED (CU ALLOY)	Part	MIL-C-21768	//220///	17.5000	GR	1.0000	0.00250000
10542368	SLUG (PB SB)	Part	MIL-L-13283	//1///	38.5000	GR	1.0000	0.00550000
4116-5	PKG FOR NSN 1305009263970	Component					1.0000	
4116/5	PALLET 40" X 48" (WOOD)	Part	MIL-P-15011		80.0000	LB	0.0001	0.00800000
8794342	SEAL METALLIC (PB ALLOY)	Part	QQ-L-201	/1////	0.0039	LB	0.0006	0.00000234
8794342	SEAL METALLIC (PB ALLOY) (ALT)	Part	QQ-L-201	/2////	0.0039	LB	0.0006	
8794342	SEAL METALLIC (ZN) (ALT)	Part	COMMERCIAL		27.0000	GR	0.0006	
7553296	BOX AMMO M2A1 (STEEL)	Part	MIL-B-3060		5.8000	LB	0.0012	0.00696000
7553302	GASKET COVER (RUBBER)	Part	MIL-R-3065	//410/RS//			0.0012	
9345239-1	FILLER SIDE (FIBERBOARD)	Part	PPP-F-320	/CF/175/D//	592.3600	GR	0.0012	0.00010155
9345239-2	FILLER CORNER (FIBERBOARD)	Part	PPP-F-320	/CF/175/D//	179.2900	GR	0.0012	0.00003073
9345239-3	TAPE REMOVAL (COTTON)	Part	DDD-T-86	///2/1/	18.5100	GR	0.0500	0.00013220
7553347	BOX WRBD ASSY	Component	MIL-B-46506				0.0006	
7553347-4	BOX WRBD (WOOD WIREBOUND)	Part	MIL-B-46506		5.7500	LB	0.0004	
7553347-3	END BOX WRBD (WOOD)	Part	PPP-B-585		1.0000	LB	0.0008	
7553347-1	SEPARATOR (FIBERBOARD)	Part	MIL-F-50449				1.0000	
7553347-1	SEPARATOR (POLYETHYLENE FOAM) (ALT)	Part	PPP-C-1752	/1/A///			1.0000	
7553347-1	SEPARATOR (PLASTIC) (ALT)	Part	MIL-P-83668	/2////			1.0000	
7553347-2	FIILER ENDS (FIBERBOARD)	Part	MIL-F-50449				1.0000	
7553347-2	FILLER ENDS (POLYETHYLENE FOAM) (ALT)	Part	PPP-C-1752	/1/A///			1.0000	
7553347-2	FILLER ENDS (PLASTIC) (ALT)	Part	MIL-P-83668	/2////			1.0000	

USADACS - MIDAS DETAILED STRUCTURE FOR A MUNITION (LESS BULK ITEMS)

06/09/97

Nomenclature: CTG 5.56MM BALL M193

NSN: 1305009263970 DODIC: A066 Reported Weight: 182.0000 GR (0.0260 LB)

DRAWING #	NOMENCLATURE	TYPE	SPECIFICATION	TGCS	-- REPORTED --- WEIGHT	UNIT	FACTOR	FACTORED WEIGHT(LB)
1053443	CARTON ASSY	Component					0.0500	
10534433-1	CARTON (AUTO PACK) (CHIPBOARD)	Part	PPP-B-566	/A/1/A/1/	0.4100	OZ	0.0500	0.00006406
10534433-2	CARTON (CHIPBOARD) (ALT)	Part	PPP-B-566	/D/1/A/2/	0.4100	GR	0.0500	
10534433-4	COMB (CHIPBOARD)	Part	PPP-B-566				0.4500	
10534433-3	SEPARATOR (CHIPBOARD)	Part	PPP-B-566				0.0500	
10534433-6	SEPARATOR (BAKELITE DYNK POLYETHYLENE) (ALT)	Part					0.0500	
9273748	LABEL (GUMMED PAPER)	Part	UU-L-1644A				0.0500	
								0.04513488

USADACS - MIDAS DETAILED STRUCTURE FOR A MUNITION (LESS BULK ITEMS)

Nomenclature: CTG 5.56MM TR M196
NSN: 1305009650832 DODIC: A068 Reported Weight: 177.0000 GR (0.0253 LB)

DRAWING #	NOMENCLATURE	TYPE	SPECIFICATION	TGCS	-- REPORTED --- WEIGHT	UNIT	FACTOR	FACTORED WEIGHT(LB)
10534193	CTG 5.56MM TR M196	Munition	MIL-C-60111		177.0000	GR	1.0000	
10534193	CTG 5.56MM TRACER M196	Component	MIL-C-60111		177.0000	GR	1.0000	
10524200	CASE (CU ALLOY)	Part	MIL-C-50	///260/ASPHALT/	95.0000	GR	1.0000	0.01357200
11820451	CASE (CU ALLOY) (ALT)	Part	MIL-C-50		115.0000	GR	1.0000	
	PROP IMR 8208-M (PROP IMR 8208-M)	Part	10535450		25.3000	GR	1.0000	0.00361400
	DIPHENYLAMINE (0.88%)	Compound	MIL-D-98					
	GRAPHITE (0.40%)	Compound	MIL-G-155					
	ETHYLENE DIMETHACRYL (5.00%)	Compound	MIL-E-14828					
	K SULFATE (0.55%)	Compound	MIL-P-193					
	NC (N 13.15%) (93.17%)	Compound	MIL-N-244					
	PROP WC844 (PROP WC844) (ALT)	Part	10542743		28.5000	GR	1.0000	
	NC (N 13.15%) (83.22%)	Compound	MIL-N-244					
	GRAPHITE (0.40%)	Compound	MIL-G-155					
	NA SULFATE (0.50%)	Compound	MIL-S-50004					
	CA CARBONATE (0.25%)	Compound	MIL-C-293					
	NITROGLYCERIN (10.00%)	Compound	MIL-N-246					
	DIPHENYLAMINE (1.13%)	Compound	MIL-D-98					
	DIBUTYLPHTHALATE (4.50%)	Compound	MIL-D-218					
	PROP CMR 170 (PROP CMR 170) (ALT)	Part	11735682		25.8000	GR	1.0000	
	NITROGLYCERIN (5.50%)	Compound	MIL-N-246					
	GRAPHITE (0.50%)	Compound	MIL-G-155					
	ETHYL CENTRALITE (2.25%)	Compound	MIL-E-255					
	METHYL CENTRALITE (2.25%)	Compound	MIL-M-19719					
	K SULFATE (0.55%)	Compound	MIL-P-193					
	NC (N 13.15%) (88.95%)	Compound	MIL-N-244					
10542726	BULLET M196	Component			54.0000	GR	1.0000	
10542727	JACKET (CU ALLOY CLAD STEEL)	Part	MIL-S-13468		24.0000	GR	1.0000	0.00342900
10542728	FILLER POINT (PB SB)	Part	MIL-L-13283		26.5000	GR	1.0000	0.00378600
	PEP (TRACER COMP R-284)	Part	10522416		1.2000	GR	1.0000	0.00017100
	POLYVINYL CHLORIDE (17.00%)	Compound	MIL-P-20307					
	SR NITRATE (55.00%)	Compound	MIL-S-20322	//A OR B///				
	MG PWDR (28.00%)	Compound	MIL-M-382	/3////				
	PEP (IGN COMP I-560)	Part	10542723		1.2000	GR	1.0000	0.00017100
	POLYVINYL CHLORIDE (15.00%)	Compound	MIL-P-20307					
	SR NITRATE (27.50%)	Compound	MIL-S-20322	//A OR B///				
	MG PWDR (27.50%)	Compound	MIL-M-382	/3////				
	SR PEROXIDE (30.00%)	Compound	MIL-S-612	//B///				
	PEP (IGN COMP I-559)	Part	10542722		1.0000	GR	1.0000	0.00014300
	CA RESINATE (7.95%)	Compound	MIL-C-20470	/1 OR 2////				
	SR PEROXIDE (71.55%)	Compound	MIL-S-612	//B///				
	PB DIOXIDE (6.00%)	Compound	MIL-L-376	/1 OR 2//1//				
	MG PWDR (14.50%)	Compound	MIL-M-382	/3////				
	PEP (IGN COMP I-561) (ALT)	Part	9340703		1.0000	GR	1.0000	
	CA RESINATE (8.25%)	Compound	MIL-C-20470	/1 OR 2////				
	SR PEROXIDE (74.25%)	Compound	MIL-S-612	//B///				
	MG PWDR (17.50%)	Compound	MIL-M-382	/3////				
11740678	CUP CLOSURE (BRS)	Part	ASTM-B36	///220//	0.2000	GR	1.0000	0.00002900
10534279	PRIMER #41	Component	MIL-P-46610		4.0000	GR	1.0000	
10534280	CUP PRIMER (CU ALLOY)	Part	MIL-C-50	//260///	2.5000	GR	1.0000	0.00035700
10534282	DISC (PAPER SEALING)	Part	MIL-P-60169	/1////	0.0100	GR	1.0000	0.00000100
10534281	ANVIL (CU ALLOY)	Part	MIL-C-50	//260///	0.7000	GR	1.0000	0.00010000
10534283	PELLET BOOSTER (PRIMER COMP FA-956)	Part	10522388		0.3900	GR	1.0000	0.00005600

USADACS - MIDAS DETAILED STRUCTURE FOR A MUNITION (LESS BULK ITEMS)

Nomenclature: CTG 5.56MM TR M196
NSN: 1305009650832 DODIC: A068

Reported Weight: 177.0000 GR (0.0253 LB)

DRAWING #	NOMENCLATURE	TYPE	SPECIFICATION	TGCS	-- REPORTED --- WEIGHT	UNIT	FACTOR	FACTORED WEIGHT(LB)
	SB SULFIDE (15.00%)	Compound	MIL-A-159	///1,2 OR 3//				
	BA NITRATE (32.00%)	Compound	MIL-B-162	///1//				
	PB STYPHNATE (37.00%)	Compound	MIL-L-757					
	TETRACENE (4.00%)	Compound	MIL-T-46938					
	PETN (5.00%)	Compound	MIL-P-387	///2//				
	AL PWDR (7.00%)	Compound	MIL-A-512	/3/F/6//				
								0.02542900

USADACS - MIDAS DETAILED STRUCT FOR A MUNITION (LESS BULK ITEMS)

06/09/97

Nomenclature: CTG 5.56MM BALL M193

NSN: 1305009263930 DODIC: A071 Reported Weight: 182.0000 GR (0.0260 LB)

DRAWING #	NOMENCLATURE	TYPE	SPECIFICATION	TGCS	-- REPORTED --- WEIGHT	UNIT	FACTOR	FACTORED WEIGHT(LB)
10523632	CTG 5.56MM BALL M193	Munition			182.0000	GR	1.0000	
10523632	CTG 5.56MM BALL M193	Component	MIL-C-9963		182.0000	GR	1.0000	
10524200	CASE (CU ALLOY)	Part	MIL-C-50	///260/ASPHALT/	95.0000	GR	1.0000	0.01357200
11820451	CASE (CU ALLOY) (ALT)	Part	MIL-C-50		115.0000	GR	1.0000	
	PROP WC844 (PROP WC844)	Part	10542743		28.5000	GR	1.0000	0.00407200
	NC (N 13.15%) (83.22%)	Compound	MIL-N-244					
	GRAPHITE (0.40%)	Compound	MIL-G-155					
	NA SULFATE (0.50%)	Compound	MIL-S-50004					
	CA CARBONATE (0.25%)	Compound	MIL-C-293					
	NITROGLYCERIN (10.00%)	Compound	MIL-N-246					
	DIPHENYLAMINE (1.13%)	Compound	MIL-D-98					
	DIBUTYLPHTHALATE (4.50%)	Compound	MIL-D-218					
	PROP CMR 170 (PROP CMR 170)	Part	11735682		25.8000	GR	1.0000	0.00368600
	NITROGLYCERIN (5.50%)	Compound	MIL-N-246					
	GRAPHITE (0.50%)	Compound	MIL-G-155					
	ETHYL CENTRALITE (2.25%)	Compound	MIL-E-255					
	METHYL CENTRALITE (2.25%)	Compound	MIL-M-19719					
	K SULFATE (0.55%)	Compound	MIL-P-193					
	NC (N 13.15%) (88.95%)	Compound	MIL-N-244					
10534279	PRIMER #41	Component	MIL-P-46610		4.0000	GR	1.0000	
10534280	CUP PRIMER (CU ALLOY)	Part	MIL-C-50	//260///	2.5000	GR	1.0000	0.00035700
10534282	DISC (PAPER SEALING)	Part	MIL-P-60169	/1////	0.0100	GR	1.0000	0.00000100
10534281	ANVIL (CU ALLOY)	Part	MIL-C-50	//260///	0.7000	GR	1.0000	0.00010000
10534283	PELLET BOOSTER (PRIMER COMP FA-956)	Part	10522388		0.3900	GR	1.0000	0.00005600
	SB SULFIDE (15.00%)	Compound	MIL-A-159	///1,2 OR 3//				
	BA NITRATE (32.00%)	Compound	MIL-B-162	///1//				
	PB STYPHNATE (37.00%)	Compound	MIL-L-757					
	TETRACENE (4.00%)	Compound	MIL-T-46938					
	PETN (5.00%)	Compound	MIL-P-387	///2//				
	AL PWDR (7.00%)	Compound	MIL-A-512	/3/F/6//				
10524197	BULLET M193	Component			56.0000	GR	1.0000	
12903080	JACKET POINTED (CU ALLOY)	Part	MIL-C-21768	//220///	17.5000	GR	1.0000	0.00250000
10542368	SLUG (PB SB)	Part	MIL-L-13283	//1///	38.5000	GR	1.0000	0.00550000
4116-5	PKG FOR NSN 1305009263930	Component					1.0000	
4116/5	PALLET 40" X 48" (WOOD)	Part	MIL-P-15011	/1//1/1/	80.0000	LB	0.0001	0.00800000
8794342	SEAL METALLIC (PB ALLOY)	Part	QQ-L-201	/1////	0.0039	LB	0.0006	0.00000234
8794342	SEAL METALLIC (PB ALLOY) (ALT)	Part	QQ-L-201	/2////	0.0039	LB	0.0006	
8794342	SEAL METALLIC (ZN) (ALT)	Part	COMMERCIAL		27.0000	GR	0.0006	
7553296	BOX AMMO M2A1 (STEEL)	Part	MIL-B-3060		5.8000	LB	0.0012	0.00696000
7553302	GASKET COVER (RUBBER)	Part	MIL-R-3065	//410/RS//			0.0012	
10542257-1	FILLER (CORRGUATION)	Part	PPP-F-320	/CF/275/D//			0.0048	
10542257-2	FILLER (MOLDED POLYSTYRENE)	Part	MIL-P-9644	/CF/275/D//			0.0012	
10534431	BANDOLEER M3 (COTTON CLOTH)	Part	MIL-C-13453		0.8020	GR	0.0071	0.00000081
11010483	CLIP 10RD (STEEL)	Part	QQ-S-698				0.1000	
11010484	FILLER MAGAZINE (STEEL)	Part	QQ-S-698		0.0270	LB	0.0071	0.00019170
7553347	BOX WRBD ASSY	Component	MIL-B-46506				0.0006	
7553347-4	BOX WRBD (WOOD WIREBOUND)	Part	MIL-B-46506		5.7500	LB	0.0004	
7553347-3	END BOX WRBD (WOOD)	Part	PPP-B-585		1.0000	LB	0.0008	
7553347-1	SEPARATOR (FIBERBOARD)	Part	MIL-F-50449				1.0000	
7553347-1	SEPARATOR (POLYETHYLENE FOAM) (ALT)	Part	PPP-C-1752	/1/A///			1.0000	
7553347-1	SEPARATOR (PLASTIC) (ALT)	Part	MIL-P-83668	/2////			1.0000	
7553347-2	FIILER ENDS (FIBERBOARD)	Part	MIL-F-50449				1.0000	

USADACS - MIDAS DETAILED STRUCTURE FOR A MUNITION (LESS BULK ITEMS)

06/09/97

Nomenclature: CTG 5.56MM BALL M193

NSN: 1305009263930 DODIC: A071 Reported Weight: 182.0000 GR (0.0260 LB)

DRAWING #	NOMENCLATURE	TYPE	SPECIFICATION	TGCS	-- REPORTED --- WEIGHT	UNIT	FACTOR	FACTORED WEIGHT(LB)
7553347-2	FILLER ENDS (POLYETHYLENE FOAM) (ALT)	Part	PPP-C-1752	/1/A///			1.0000	
7553347-2	FILLER ENDS (PLASTIC) (ALT)	Part	MIL-P-83668	/2////			1.0000	
1053443	CARTON ASSY	Component					0.0167	
10534433-1	CARTON (AUTO PACK) (CHIPBOARD)	Part	PPP-B-566	/A/1/A/1/	0.4100	OZ	0.0500	0.00002050
10534433-2	CARTON (CHIPBOARD) (ALT)	Part	PPP-B-566	/D/1/A/2/	0.4100	GR	0.0500	
10534433-4	COMB (CHIPBOARD)	Part	PPP-B-566				0.4500	
10534433-3	SEPARATOR (CHIPBOARD)	Part	PPP-B-566				0.0500	
10534433-6	SEPARATOR (BAKELITE DYNK POLYETHYLENE) (ALT)	Part					0.0500	
9273748	LABEL (GUMMED PAPER)	Part	UU-L-1644A				0.0500	
								0.04501935

USADACS - MIDAS DETAILED STRUCTURE FOR A MUNITION (LESS BULK ITEMS)

06/09/97

Nomenclature: CTG 5.56MM BLK M200

NSN: 1305000058005 DODIC: A080 Reported Weight: 109.0000 GR (0.0156 LB)

DRAWING #	NOMENCLATURE	TYPE	SPECIFICATION	TGCS	-- REPORTED --- WEIGHT	UNIT	FACTOR	FACTORED WEIGHT(LB)
10542379	CTG 5.56MM BLK M200	Munition	MIL-C-60616		109.0000	GR	1.0000	
10542379	CTG 5.56MM BLK M200	Component	MIL-C-60616		109.0000	GR	1.0000	
10534927	CASE (CU ALLOY)	Part	MIL-C-50	///260//	98.1000	GR	1.0000	0.01401500
	PROP HPC13 (PROP HPC 13)	Part	10542380		7.0000	GR	1.0000	0.00100000
	NC (N 13.25%) (66.10%)	Compound	MIL-N-244					
	GRAPHITE (0.40%)	Compound	MIL-G-155					
	NITROGLYCERIN (28.50%)	Compound	MIL-N-246					
	ETHYL CENTRALITE (4.25%)	Compound	MIL-E-255					
	K SULFATE (0.75%)	Compound	MIL-P-193					
	PROP WC814 (PROP WC814) (ALT)	Part	9345271		7.0000	GR	1.0000	
	NC (N 13.15%) (84.10%)	Compound	MIL-N-244					
	GRAPHITE (0.40%)	Compound	MIL-G-155					
	NA SULFATE (0.50%)	Compound	MIL-S-50004					
	CA CARBONATE (0.25%)	Compound	MIL-C-293					
	NITROGLYCERIN (13.00%)	Compound	MIL-N-246					
	DIPHENYLAMINE (0.75%)	Compound	MIL-D-98					
	DIBUTYLPHTHALATE (1.00%)	Compound	MIL-D-218					
10534279	PRIMER #41	Component	MIL-P-46610		4.0000	GR	1.0000	
10534280	CUP PRIMER (CU ALLOY)	Part	MIL-C-50	//260///	2.5000	GR	1.0000	0.00035700
10534282	DISC (PAPER SEALING)	Part	MIL-P-60169	/1////	0.0100	GR	1.0000	0.00000100
10534281	ANVIL (CU ALLOY)	Part	MIL-C-50	//260///	0.7000	GR	1.0000	0.00010000
10534283	PELLET BOOSTER (PRIMER COMP FA-956)	Part	10522388		0.3900	GR	1.0000	0.00005600
	SB SULFIDE (15.00%)	Compound	MIL-A-159	///1,2 OR 3//				
	BA NITRATE (32.00%)	Compound	MIL-B-162	///1//				
	PB STYPHNATE (37.00%)	Compound	MIL-L-757					
	TETRACENE (4.00%)	Compound	MIL-T-46938					
	PETN (5.00%)	Compound	MIL-P-387	///2//				
	AL PWDR (7.00%)	Compound	MIL-A-512	/3/F/6//				
								0.01552900

USADACS - MIDAS DETAILED STRUCTURE FOR A MUNITION (LESS BULK ITEMS)

06/09/97

Nomenclature: CTG 7.62MM BLK M82

NSN: 1305003415129 DODIC: A111 Reported Weight: 234.5000 GR (0.0335 LB)

DRAWING #	NOMENCLATURE	TYPE	SPECIFICATION	TGCS	-- REPORTED --- WEIGHT	UNIT	FACTOR	FACTORED WEIGHT(LB)
8597283	CTG 7.62MM BLK M82	Munition	MIL-C-46933		234.5000	GR	1.0000	
8597283	CTG 7.62MM BLK M82	Component	MIL-C-46933		234.5000	GR	1.0000	
8597284	CASE (CU ALLOY)	Part	MIL-C-50	//260///	213.0000	GR	1.0000	0.03042900
	PROP WC818 (PROP WC818)	Part	10534787		16.7000	GR	1.0000	0.00238600
	NC (N 13.15%) (87.95%)	Compound	MIL-N-244					
	GRAPHITE (0.30%)	Compound	MIL-G-155					
	CA CARBONATE (1.00%)	Compound	MIL-C-293					
	NITROGLYCERIN (8.00%)	Compound	MIL-N-246					
	DIPHENYLAMINE (0.75%)	Compound	MIL-D-98					
	DIBUTYLPHTHALATE (1.50%)	Compound	MIL-D-218					
	NA SULFATE (0.50%)	Compound	MIL-S-50004					
10522621	PRIMER PERC #34	Component			5.4300	GR	1.0000	
8594095	CUP PRIMER (CU ALLOY)	Part	MIL-C-50	//260///	3.5000	GR	1.0000	0.00050000
10522622	PELLET BOOSTER (PRIMER COMP FA-956)	Part	10522388		0.6000	GR	1.0000	0.00008600
	SB SULFIDE (15.00%)	Compound	MIL-A-159	///1,2 OR 3//				
	BA NITRATE (32.00%)	Compound	MIL-B-162	///1//				
	PB STYPHNATE (37.00%)	Compound	MIL-L-757					
	TETRACENE (4.00%)	Compound	MIL-T-46938					
	PETN (5.00%)	Compound	MIL-P-387	///2//				
	AL PWDR (7.00%)	Compound	MIL-A-512	/3/F/6//				
8594098	DISC (PAPER SEALING)	Part	MIL-P-60169				1.0000	
8594096	ANVIL (CU ALLOY)	Part	MIL-C-50	//260///	1.0700	GR	1.0000	0.00015300
								0.03355400

06/09/97

USADACS - MIDAS DETAILED STRUCTU... FOR A MUNITION (LESS BULK ITEMS)

Nomenclature: CTG 7.62MM NATO BALL M80

NSN: 1305009144675 DODIC: A130 Reported Weight: 370.0000 GR (0.0529 LB)

DRAWING #	NOMENCLATURE	TYPE	SPECIFICATION	TGCS	-- REPORTED --- WEIGHT	UNIT	FACTOR	FACTORED WEIGHT(LB)
10521998	CTG 7.62MM NATO BALL M80	Munition			370.0000	GR	1.0000	
10521998	CTG 7.62MM NATO BALL M80	Component	MIL-C-46931		370.0000	GR	1.0000	
10521997	CASE (CU ALLOY)	Part	MIL-C-50	//260///	170.0000	GR	1.0000	0.02428600
	PROP WC846 (PROP WC846)	Part	10534784		46.0000	GR	1.0000	0.00657200
	GRAPHITE (0.40%)	Compound	MIL-G-155					
	NA SULFATE (0.50%)	Compound	MIL-S-50004					
	CA CARBONATE (0.25%)	Compound	MIL-C-293					
	NITROGLYCERIN (9.50%)	Compound	MIL-N-246					
	DIPHENYLAMINE (1.13%)	Compound	MIL-D-98					
	DIBUTYLPHTHALATE (5.25%)	Compound	MIL-D-218					
	NC (N 13.15%) (82.97%)	Compound	MIL-N-244					
8595669	BULLET M80	Component			149.0000	GR	1.0000	
8595668	JACKET (CU ALLOY CLAD STEEL)	Part	MIL-S-13468		34.5000	GR	1.0000	0.00492900
8595667	SLUG (PB SB)	Part	MIL-L-13283	//1///	114.0000	GR	1.0000	0.01628600
10522590	BULLET M80 (ALT)	Component			149.0000	GR	1.0000	
10522591	JACKET (CU ALLOY)	Part	MIL-C-21768	//220///	52.0000	GR	1.0000	
10522592	SLUG (PB SB)	Part	MIL-L-13283		97.0000	GR	1.0000	
10522621	PRIMER PERC #34	Component			5.4300	GR	1.0000	
8594095	CUP PRIMER (CU ALLOY)	Part	MIL-C-50	//260///	3.5000	GR	1.0000	0.00050000
10522622	PELLET BOOSTER (PRIMER COMP FA-956)	Part	10522388		0.6000	GR	1.0000	0.00008600
	SB SULFIDE (15.00%)	Compound	MIL-A-159	///1,2 OR 3//				
	BA NITRATE (32.00%)	Compound	MIL-B-162	///1//				
	PB STYPHNATE (37.00%)	Compound	MIL-L-757					
	TETRACENE (4.00%)	Compound	MIL-T-46938					
	PETN (5.00%)	Compound	MIL-P-387	///2//				
	AL PWDR (7.00%)	Compound	MIL-A-512	/3/F/6//				
8594098	DISC (PAPER SEALING)	Part	MIL-P-60169				1.0000	
8594096	ANVIL (CU ALLOY)	Part	MIL-C-50	//260///	1.0700	GR	1.0000	0.00015300
4116-7A	PKG FOR NSN 1305009144675	Component					1.0000	
4116/7A	PALLET 40" X 48" (WOOD)	Part	MIL-P-15011		80.0000	LB	0.0001	0.00800000
8794342	SEAL METALLIC (PB ALLOY)	Part	QQ-L-201	/1////	0.0039	LB	0.0012	0.00000468
8794342	SEAL METALLIC (PB ALLOY) (ALT)	Part	QQ-L-201	/2////	0.0039	LB	0.0012	
8794342	SEAL METALLIC (ZN) (ALT)	Part	COMMERCIAL		27.0000	GR	0.0012	
7553296	BOX AMMO M2A1 (STEEL)	Part	MIL-B-3060		5.8000	LB	0.0024	0.01392000
7553302	GASKET COVER (RUBBER)	Part	MIL-R-3065	//410/RS//			0.0024	
8594723	BANDOLEER M2 (COTTON CLOTH)	Part	MIL-C-13453		0.1000	LB	0.0167	0.00167000
8594722	CARTON (CHIPBOARD)	Part	PPP-B-566	//1///	0.0800	LB	0.0143	0.00114400
7790130	CLIP 5 ROUND (STEEL)	Part	ASTM-A684		0.0180	LB	0.2000	0.00360000
7791154	MAGAZINE FILLER 5 ROUND (STEEL)	Part	QQ-S-698	/2////	0.0300	LB	0.0167	0.00050100
7553347	BOX WRBD ASSY	Component	MIL-B-46506				0.0012	
7553347-4	BOX WRBD (WOOD WIREBOUND)	Part	MIL-B-46506		5.7500	LB	0.0004	
7553347-3	END BOX WRBD (WOOD)	Part	PPP-B-585		1.0000	LB	0.0008	
7553347-1	SEPARATOR (FIBERBOARD)	Part	MIL-F-50449				1.0000	
7553347-1	SEPARATOR (POLYETHYLENE FOAM) (ALT)	Part	PPP-C-1752	/1/A///			1.0000	
7553347-1	SEPARATOR (PLASTIC) (ALT)	Part	MIL-P-83668	/2////			1.0000	
7553347-2	FIILER ENDS (FIBERBOARD)	Part	MIL-F-50449				1.0000	
7553347-2	FILLER ENDS (POLYETHYLENE FOAM) (ALT)	Part	PPP-C-1752	/1/A///			1.0000	
7553347-2	FILLER ENDS (PLASTIC) (ALT)	Part	MIL-P-83668	/2////			1.0000	
								0.08165168

06/09/97

USADACS - MIDAS DETAILED STRUCTURE FOR A MUNITION (LESS BULK ITEMS)

Nomenclature: CTG 7.62MM 4 BALL M59/M80/1 TR M62 LNKD

NSN: 1305004498068 DODIC: A131 Reported Weight: 393.0000 GR (0.0561 LB)

DRAWING #	NOMENCLATURE	TYPE	SPECIFICATION	TGCS	-- REPORTED --- WEIGHT	UNIT	FACTOR	FACTORED WEIGHT(LB)
	CTG 7.62MM 4 BALL M59/M80/1 TR M62 LNKD M13	Munition			393.0000	GR	1.0000	
7553702	CTG 7.62MM BALL M59	Component	MIL-C-46277		393.0000	GR	0.8000	
10521997	CASE (CU ALLOY)	Part	MIL-C-50		190.0000	GR	1.0000	0.02171440
	PROP WC846 (PROP WC846)	Part	10534784		46.0000	GR	1.0000	0.00525760
	GRAPHITE (0.40%)	Compound	MIL-G-155					
	NA SULFATE (0.50%)	Compound	MIL-S-50004					
	CA CARBONATE (0.25%)	Compound	MIL-C-293					
	NITROGLYCERIN (9.50%)	Compound	MIL-N-246					
	DIPHENYLAMINE (1.13%)	Compound	MIL-D-98					
	DIBUTYLPHTHALATE (5.25%)	Compound	MIL-D-218					
	NC (N 13.15%) (82.97%)	Compound	MIL-N-244					
	PROP IMR 4475 (PROP IMR 4475) (ALT)	Part	10534786		41.0000	GR	1.0000	
	NC (N 13.15%) (90.18%)	Compound	MIL-N-244					
	DIPHENYLAMINE (0.87%)	Compound	MIL-D-98					
	GRAPHITE (MAX) (0.40%)	Compound	MIL-G-155					
	DINITROLTLUENE (8.00%)	Compound	MIL-D-204					
	K SULFATE (0.55%)	Compound	MIL-P-193					
10522621	PRIMER PERC #34	Component			5.4300	GR	1.0000	
8594095	CUP PRIMER (CU ALLOY)	Part	MIL-C-50	//260///	3.5000	GR	1.0000	0.00040000
10522622	PELLET BOOSTER (PRIMER COMP FA-956)	Part	10522388		0.6000	GR	1.0000	0.00006880
	SB SULFIDE (15.00%)	Compound	MIL-A-159	///1,2 OR 3//				
	BA NITRATE (32.00%)	Compound	MIL-B-162	///1//				
	PB STYPHNATE (37.00%)	Compound	MIL-L-757					
	TETRACENE (4.00%)	Compound	MIL-T-46938					
	PETN (5.00%)	Compound	MIL-P-387	///2//				
	AL PWDR (7.00%)	Compound	MIL-A-512	/3/F/6//				
8594098	DISC (PAPER SEALING)	Part	MIL-P-60169				1.0000	
8594096	ANVIL (CU ALLOY)	Part	MIL-C-50	//260///	1.0700	GR	1.0000	0.00012240
7553745	BULLET	Component			150.5000	GR	1.0000	
7553741	JACKET (BRS)	Part	ASTM-B36	//220///	57.0000	GR	1.0000	0.00651440
7553746	CORE (STEEL)	Part	QQ-S-637		55.0000	GR	1.0000	0.00628560
7553743	FILLER POINT (PB SB)	Part	MIL-L-13283	//1///	24.0000	GR	1.0000	0.00274320
7553744	FILLER BASE (PB SB)	Part	MIL-L-13283	//1///	14.5000	GR	1.0000	0.00165680
10521998	CTG 7.62MM NATO BALL M80 (ALT)	Component	MIL-C-46931		370.0000	GR	0.8000	
10521997	CASE (CU ALLOY)	Part	MIL-C-50	//260///	170.0000	GR	1.0000	
	PROP WC846 (PROP WC846)	Part	10534784		46.0000	GR	1.0000	
	GRAPHITE (0.40%)	Compound	MIL-G-155					
	NA SULFATE (0.50%)	Compound	MIL-S-50004					
	CA CARBONATE (0.25%)	Compound	MIL-C-293					
	NITROGLYCERIN (9.50%)	Compound	MIL-N-246					
	DIPHENYLAMINE (1.13%)	Compound	MIL-D-98					
	DIBUTYLPHTHALATE (5.25%)	Compound	MIL-D-218					
	NC (N 13.15%) (82.97%)	Compound	MIL-N-244					
8595669	BULLET M80	Component			149.0000	GR	1.0000	
8595668	JACKET (CU ALLOY CLAD STEEL)	Part	MIL-S-13468		34.5000	GR	1.0000	
8595667	SLUG (PB SB)	Part	MIL-L-13283	//1///	114.0000	GR	1.0000	
10522590	BULLET M80 (ALT)	Component			149.0000	GR	1.0000	
10522591	JACKET (CU ALLOY)	Part	MIL-C-21768	//220///	52.0000	GR	1.0000	
10522592	SLUG (PB SB)	Part	MIL-L-13283		97.0000	GR	1.0000	
10522621	PRIMER PERC #34	Component			5.4300	GR	1.0000	
8594095	CUP PRIMER (CU ALLOY)	Part	MIL-C-50	//260///	3.5000	GR	1.0000	
10522622	PELLET BOOSTER (PRIMER COMP FA-956)	Part	10522388		0.6000	GR	1.0000	

USADACS - MIDAS DETAILED STRUCTURE FOR A MUNITION (LESS BULK ITEMS)

Nomenclature: CTG 7.62MM 4 BALL M59/M80/1 TR M62 LNKD
NSN: 1305004498068 DODIC: A131 Reported Weight: 393.0000 GR (0.0561 LB)

DRAWING #	NOMENCLATURE	TYPE	SPECIFICATION	TGCS	-- REPORTED --- WEIGHT	UNIT	FACTOR	FACTORED WEIGHT(LB)
	SB SULFIDE (15.00%)	Compound	MIL-A-159	///1,2 OR 3//				
	BA NITRATE (32.00%)	Compound	MIL-B-162	///1//				
	PB STYPHNATE (37.00%)	Compound	MIL-L-757					
	TETRACENE (4.00%)	Compound	MIL-T-46938					
	PETN (5.00%)	Compound	MIL-P-387	///2//				
	AL PWDR (7.00%)	Compound	MIL-A-512	/3/F/6//				
8594098	DISC (PAPER SEALING)	Part	MIL-P-60169				1.0000	
8594096	ANVIL (CU ALLOY)	Part	MIL-C-50	//260///	1.0700	GR	1.0000	
7553705	CTG 7.62MM TR M62	Component	FA-PD-SP-1951		383.0000	GR	0.2000	
7553738	CASE (CU ALLOY)	Part	MIL-C-50	//260///	190.0000	GR	1.0000	0.00542860
	CU (70.00%)	Compound						
	PB (0.07%)	Compound						
	FE (0.05%)	Compound						
	ZN (29.88%)	Compound						
	PROP TYPE II (PROP TYPE II)	Part	8595543	/2//3 OR 4//	47.0000	GR	1.0000	0.00134280
	NC (89.30%)	Compound	MIL-N-224					
	NITROGLYCERIN (9.00%)	Compound	MIL-N-246					
	NA SULFATE (0.15%)	Compound	MIL-S-50004					
	CA CARBONATE (0.65%)	Compound	MIL-C-293					
	DIPHENYLAMINE (0.90%)	Compound	MIL-D-98					
8594094	PRIMER PERC #36	Component			5.3000	GR	1.0000	
8594095	CUP PRIMER (CU ALLOY)	Part	MIL-C-50	//260///	3.5000	GR	1.0000	0.00010000
8594098	DISC (PAPER SEALING)	Part	MIL-P-60169	/1////			1.0000	
8594099	PELLET (PRIMER COMP FA-961)	Part	10521244		0.6000	GR	1.0000	0.00001720
	PB STYPHNATE (36.00%)	Compound	MIL-L-757					
	TETRACENE (3.00%)	Compound	MIL-T-46938					
	BA NITRATE (29.00%)	Compound	MIL-B-162	///1//				
	PB DIOXIDE (9.00%)	Compound	MIL-L-376	//A///				
	SB SULFIDE (9.00%)	Compound	MIL-A-159	//1,2 OR 3///				
	ZR (9.00%)	Compound	MIL-Z-399	/1//3//				
	PETN (5.00%)	Compound	MIL-P-00387	///2//				
8594096	ANVIL (CU ALLOY)	Part	MIL-C-50	//260///	1.0700	GR	1.0000	0.00003060
8596120	ANVIL (CU ALLOY) (ALT)	Part	MIL-C-50	//260///	1.6800	GR	1.0000	
7553758	BULLET M62	Component			146.0000	GR	1.0000	
7553759	JACKET (CU ALLOY CLAD STEEL)	Part	MIL-S-13468		60.0000	GR	1.0000	0.00171440
7553760	FILLER POINT (PB SB)	Part	MIL-L-13283	//1///	72.0000	GR	1.0000	0.00205720
7585159	CUP CLOSURE (CU ALLOY)	Part	MIL-C-21768	//220///	1.0000	GR	1.0000	0.00002860
	PEP (TRACER COMP R-284)	Part	10522416		6.5000	GR	1.0000	0.00018580
	POLYVINYL CHLORIDE (17.00%)	Compound	MIL-P-20307					
	SR NITRATE (55.00%)	Compound	MIL-S-20322	//A OR B///				
	MG PWDR (28.00%)	Compound	MIL-M-382	/3////				
	PEP (IGN COMP I-280*1)	Part	10522421		1.0000	GR	1.0000	0.00002860
	MG PWDR (15.00%)	Compound	MIL-M-382	/3////				
	CA RESINATE (8.50%)	Compound	MIL-C-20470					
	SR PEROXIDE (76.50%)	Compound	MIL-S-612					
	PEP (IGN COMP I-136)	Part	10522417M		1.0000	GR	1.0000	0.00002860
	CA RESINATE (10.00%)	Compound	MIL-C-20470	/1 OR 2////				
	SR PEROXIDE (90.00%)	Compound	MIL-S-612	//B///				
								0.05572560

USADACS - MIDAS DETAILED STRUCTURE FOR A MUNITION (LESS BULK ITEMS)

06/09/97

Nomenclature: CTG 7.62MM NATO SPEC BALL M118

NSN: 1305000642896 DODIC: A136 Reported Weight: 390.0000 GR (0.0557 LB)

DRAWING #	NOMENCLATURE	TYPE	SPECIFICATION	TGCS	-- REPORTED --- WEIGHT	UNIT	FACTOR	FACTORED WEIGHT(LB)
8597555	CTG 7.62MM NATO SPEC BALL M118	Munition			390.0000	GR	1.0000	
10521997	CASE (CU ALLOY)	Part	MIL-C-50	//260///	170.0000	GR	1.0000	0.02428600
	PROP WC750 (PROP WC750)	Part	12953463		42.0000	GR	1.0000	0.00600000
	NC (N 13.10%) (80.65%)	Compound	MIL-N-244					
	GRAPHITE (0.40%)	Compound	MIL-G-155					
	DIPHENYLAMINE (1.20%)	Compound	MIL-D-98					
	K SULFATE (1.00%)	Compound	MIL-P-193					
	NA SULFATE (0.50%)	Compound	MIL-S-50004					
	CA CARBONATE (0.25%)	Compound	MIL-C-293					
	NITROGLYCERIN (10.25%)	Compound	MIL-N-246					
	K NITRATE (1.00%)	Compound	MIL-P-156					
	DIBUTYLPHTHALATE (4.75%)	Compound	MIL-D-218					
	PROP IMR 4895 (PROP IMR 4895) (ALT)	Part	10534789		42.0000	GR	1.0000	
	DIPHENYLAMINE (0.87%)	Compound	MIL-D-98					
	GRAPHITE (0.40%)	Compound	MIL-G-155					
	DINITROTOLUENE (7.00%)	Compound	MIL-D-204					
	K SULFATE (0.55%)	Compound	MIL-P-193					
	NC (N 13.15%) (91.18%)	Compound	MIL-N-244					
	PROP WC846 (PROP WC846) (ALT)	Part	10534784		44.0000	GR	1.0000	
	GRAPHITE (0.40%)	Compound	MIL-G-155					
	NA SULFATE (0.50%)	Compound	MIL-S-50004					
	CA CARBONATE (0.25%)	Compound	MIL-C-293					
	NITROGLYCERIN (9.50%)	Compound	MIL-N-246					
	DIPHENYLAMINE (1.13%)	Compound	MIL-D-98					
	DIBUTYLPHTHALATE (5.25%)	Compound	MIL-D-218					
	NC (N 13.15%) (82.97%)	Compound	MIL-N-244					
8594094	PRIMER PERC #36	Component			5.3000	GR	1.0000	
8594095	CUP PRIMER (CU ALLOY)	Part	MIL-C-50	//260///	3.5000	GR	1.0000	0.00050000
8594098	DISC (PAPER SEALING)	Part	MIL-P-60169	/1////			1.0000	
8594099	PELLET (PRIMER COMP FA-961)	Part	10521244		0.6000	GR	1.0000	0.00008600
	PB STYPHNATE (36.00%)	Compound	MIL-L-757					
	TETRACENE (3.00%)	Compound	MIL-T-46938					
	BA NITRATE (29.00%)	Compound	MIL-B-162	///1//				
	PB DIOXIDE (9.00%)	Compound	MIL-L-376	//A///				
	SB SULFIDE (9.00%)	Compound	MIL-A-159	//1,2 OR 3///				
	ZR (9.00%)	Compound	MIL-Z-399	/1//3//				
	PETN (5.00%)	Compound	MIL-P-00387	///2//				
8594096	ANVIL (CU ALLOY)	Part	MIL-C-50	//260///	1.0700	GR	1.0000	0.00015300
8596120	ANVIL (CU ALLOY) (ALT)	Part	MIL-C-50	//260///	1.6800	GR	1.0000	
10522621	PRIMER PERC #34 (ALT)	Component			5.4300	GR	1.0000	
8594095	CUP PRIMER (CU ALLOY)	Part	MIL-C-50	//260///	3.5000	GR	1.0000	
10522622	PELLET BOOSTER (PRIMER COMP FA-956)	Part	10522388		0.6000	GR	1.0000	
	SB SULFIDE (15.00%)	Compound	MIL-A-159	///1,2 OR 3//				
	BA NITRATE (32.00%)	Compound	MIL-B-162	///1//				
	PB STYPHNATE (37.00%)	Compound	MIL-L-757					
	TETRACENE (4.00%)	Compound	MIL-T-46938					
	PETN (5.00%)	Compound	MIL-P-387	///2//				
	AL PWDR (7.00%)	Compound	MIL-A-512	/3/F/6//				
8594098	DISC (PAPER SEALING)	Part	MIL-P-60169				1.0000	
8594096	ANVIL (CU ALLOY)	Part	MIL-C-50	//260///	1.0700	GR	1.0000	
10535489	PRIMER PERC #43 (ALT)	Component			5.1500	GR	1 0000	
8594095	CUP PRIMER (CU ALLOY)	Part	MIL-C-50	//260//LACQUER/	3.5000		1.0000	

USADACS - MIDAS DETAILED STRUCTURE FOR A MUNITION (LESS BULK ITEMS)

Nomenclature: CTG 7.62MM NATO SPEC BALL M118
NSN: 1305000642896 DODIC: A136

Reported Weight: 390.0000 GR (0.0557 LB)

DRAWING #	NOMENCLATURE	TYPE	SPECIFICATION	TGCS	-- REPORTED --- WEIGHT	UNIT	FACTOR	FACTORED WEIGHT(LB)
10535490	PELLET (PRIMER MIX FA-1023)	Part	10535491		0.5800	GR	1.0000	
	PB STYPHNATE (38.00%)	Compound	MIL-L-757					
	TETRACENE (4.00%)	Compound	MIL-T-46938					
	BA NITRATE (39.00%)	Compound	MIL-B-162					
	SB SULFIDE (12.00%)	Compound	MIL-A-159					
	AL PWDR (7.00%)	Compound	MIL-A-512	/3/F/6//				
8594098	DISC (PAPER SEALING)	Part	MIL-P-60169	////SHELLAC/	0.0410	GR	1.0000	
8594096	ANVIL (CU ALLOY)	Part	MIL-C-50	//260//SHELLAC/	1.0700	GR	1.0000	
8596120	ANVIL (CU ALLOY) (ALT)	Part	MIL-C-50	//260//LACQUER/	1.6800	GR	1.0000	
8595434	BULLET	Component	MIL-B-70445		172.9000	GR	1.0000	
8595437	SLUG (PB SB)	Part	MIL-L-13283		114.2000	GR	1.0000	0.01631500
8595435	JACKET (CU ALLOY)	Part	MIL-C-21768	//220///	58.7000	GR	1.0000	0.00838600
								0.05572600

USADACS - MIDAS DETAILED STRUCTURE FOR A MUNITION (LESS BULK ITEMS)

06/09/97

Nomenclature: CTG 7.62MM NATO BALL M80 LNKD

NSN: 1305008922330 DODIC: A143 Reported Weight: 0.1010 LB

DRAWING #	NOMENCLATURE	TYPE	SPECIFICATION	TGCS	-- REPORTED --- WEIGHT	UNIT	FACTOR	FACTORED WEIGHT(LB)
10521861	CTG 7.62MM NATO BALL M80 LNKD	Munition			0.1010	LB	1.0000	
10521998	CTG 7.62MM NATO BALL M80	Component	MIL-C-46931		370.0000	GR	1.0000	
10521997	CASE (CU ALLOY)	Part	MIL-C-50	//260///	170.0000	GR	1.0000	0.02428600
	PROP WC846 (PROP WC846)	Part	10534784		46.0000	GR	1.0000	0.00657200
	GRAPHITE (0.40%)	Compound	MIL-G-155					
	NA SULFATE (0.50%)	Compound	MIL-S-50004					
	CA CARBONATE (0.25%)	Compound	MIL-C-293					
	NITROGLYCERIN (9.50%)	Compound	MIL-N-246					
	DIPHENYLAMINE (1.13%)	Compound	MIL-D-98					
	DIBUTYLPHTHALATE (5.25%)	Compound	MIL-D-218					
	NC (N 13.15%) (82.97%)	Compound	MIL-N-244					
8595669	BULLET M80	Component			149.0000	GR	1.0000	
8595668	JACKET (CU ALLOY CLAD STEEL)	Part	MIL-S-13468		34.5000	GR	1.0000	0.00492900
8595667	SLUG (PB SB)	Part	MIL-L-13283	//1///	114.0000	GR	1.0000	0.01628600
10522590	BULLET M80 (ALT)	Component			149.0000	GR	1.0000	
10522591	JACKET (CU ALLOY)	Part	MIL-C-21768	//220///	52.0000	GR	1.0000	
10522592	SLUG (PB SB)	Part	MIL-L-13283		97.0000	GR	1.0000	
10522621	PRIMER PERC #34	Component			5.4300	GR	1.0000	
8594095	CUP PRIMER (CU ALLOY)	Part	MIL-C-50	//260///	3.5000	GR	1.0000	0.00050000
10522622	PELLET BOOSTER (PRIMER COMP FA-956)	Part	10522388		0.6000	GR	1.0000	0.00008600
	SB SULFIDE (15.00%)	Compound	MIL-A-159	///1,2 OR 3//				
	BA NITRATE (32.00%)	Compound	MIL-B-162	///1//				
	PB STYPHNATE (37.00%)	Compound	MIL-L-757					
	TETRACENE (4.00%)	Compound	MIL-T-46938					
	PETN (5.00%)	Compound	MIL-P-387	///2//				
	AL PWDR (7.00%)	Compound	MIL-A-512	/3/F/6//				
8594098	DISC (PAPER SEALING)	Part	MIL-P-60169				1.0000	
8594096	ANVIL (CU ALLOY)	Part	MIL-C-50	//260///	1.0700	GR	1.0000	0.00015300
10522621	PRIMER PERC #34	Component			5.4300	GR	1.0000	
8594095	CUP PRIMER (CU ALLOY)	Part	MIL-C-50	//260///	3.5000	GR	1.0000	0.00050000
10522622	PELLET BOOSTER (PRIMER COMP FA-956)	Part	10522388		0.6000	GR	1.0000	0.00008600
	SB SULFIDE (15.00%)	Compound	MIL-A-159	///1,2 OR 3//				
	BA NITRATE (32.00%)	Compound	MIL-B-162	///1//				
	PB STYPHNATE (37.00%)	Compound	MIL-L-757					
	TETRACENE (4.00%)	Compound	MIL-T-46938					
	PETN (5.00%)	Compound	MIL-P-387	///2//				
	AL PWDR (7.00%)	Compound	MIL-A-512	/3/F/6//				
8594098	DISC (PAPER SEALING)	Part	MIL-P-60169				1.0000	
8594096	ANVIL (CU ALLOY)	Part	MIL-C-50	//260///	1.0700	GR	1.0000	0.00015300
4116-7	PKG FOR NSN 1305008922330	Component					1.0000	
4116/7	PALLET 35" X 45 1/2" (WOOD)	Part	MIL-P-15011	/1//1/1A/	65.0000	LB	0.0001	0.00650000
8594163	SEAL CAR (PB)	Part	COMMERCIAL				0.0013	
7553315	CNTR MTL M19A1 (STEEL)	Part	ASTM-A109		4.0000	LB	0.0050	0.02000000
7553315	CNTR MTL M19A1 (STEEL) (ALT)	Part	ASTM-A568		4.0000	LB	0.0050	
7553321	GASKET COVER (RUBBER)	Part	MIL-R-3050	//410A/RS//			0.0050	
10533984	BANDOLEER M4 (COTTON CLOTH)	Part	MIL-C-13453				0.0100	
10534024	CTN 100 RD LNKD (PAPERBOARD)	Part	PPP-B-566		2.0000	OZ	0.0100	0.00125000
7268389	LINK M13 (STEEL)	Part	ASTM-A684	//1050///			1.0000	
5581378	BOX WRBND M19A1	Component			6.3000	LB	1.0000	
5581378-3	BOX WRBD M19A1 (WOOD)	Part	PPP-B-585	/2//3/2/	4.3000	LB	0.0013	0.00559000
5581378-4	BOX ENDS WRBND M19A1 (WOOD)	Part	PPP-B-585	/2//3/2/	0.5000	LB	0.0025	0.00125000
5581378-2	FILLER (PLASTIC)	Part	MIL-P-50449	/1 OR 2////	0.5000	LB	0.0025	0.00125000

USADACS - MIDAS DETAILED STRUCTUR R A MUNITION (LESS BULK ITEMS)

Nomenclature: CTG 7.62MM NATO BALL M80 LNKD
NSN: 1305008922330 DODIC: A143

Reported Weight: 0.1010 LB

DRAWING #	NOMENCLATURE	TYPE	SPECIFICATION	TGCS	-- REPORTED --- WEIGHT	UNIT	FACTOR	FACTORED WEIGHT(LB)
5581378-1	SEPARATOR (FIBERBOARD)	Part	MIL-F-50449		0.5000	LB	0.0038	0.00190000
								0.09129100

USADACS - MIDAS DETAILED STRUCTURE FOR A MUNITION (LESS BULK ITEMS)

06/09/97

Nomenclature: CTG 9MM BALL M882

NSN: 1305011729558 DODIC: A363 Reported Weight: 179.0000 GR (0.0256 LB)

DRAWING #	NOMENCLATURE	TYPE	SPECIFICATION	TGCS	-- REPORTED --- WEIGHT	UNIT	FACTOR	FACTORED WEIGHT(LB)
9345211	CTG 9MM BALL M882	Munition	MIL-C-70508		179.0000	GR	1.0000	
9345213	CASE (CU ALLOY)	Part	MIL-C-50	//260///			1.0000	
	PROP HPC 33 (PROP HPC 33)	Part	12556070		5.2000	GR	1.0000	0.00074300
	NC (N 13.13%) (85.45%)	Compound	MIL-N-224					
	DIPHENYLAMINE (0.95%)	Compound	MIL-D-98					
	GRAPHITE (0.60%)	Compound	MIL-G-155					
	K NITRATE (2.00%)	Compound	MIL-P-156					
	VINSOL (4.00%)	Compound	COMMERCIAL					
	NITROGLYCERIN (7.00%)	Compound	MIL-N-246					
	PROP WPR280 (PROP WPR280) (ALT)	Part	12551726		5.2000	GR	1.0000	
	NC (N 13.10%) (78.68%)	Compound	MIL-N-224					
	ETHYL CENTRALITE (3.50%)	Compound	MIL-E-255					
	GRAPHITE (0.40%)	Compound	MIL-G-155					
	K SULFATE (0.50%)	Compound	MIL-P-193					
	DINITROTOLUENE (1.00%)	Compound	MIL-D-204					
	DIPHENYLAMINE (0.92%)	Compound	MIL-D-98					
	NITROGLYCERIN (15.00%)	Compound	MIL-N-246					
9345212	BULLET BALL 9MM	Component			124.0000	GR	1.0000	
9345212	JACKET (CU ALLOY)	Part	MIL-C-21768	//260///	23.0000	GR	1.0000	0.00328600
9345212	SLUG (PB SB)	Part	MIL-L-13283		101.0000	GR	1.0000	0.01442900
9354609	PRIMER PERC 9MM	Component	COMMERCIAL		0.3900	GR	1.0000	
9354609*1	CUP (CU ALLOY)	Part	COMMERCIAL	//260///			1.0000	
	PEP (WINCHESTER 116-282A)	Part	COMMERCIAL		0.3200	GR	1.0000	0.00004600
	PB STYPHNATE (40.00%)	Compound	MIL-L-757					
	TETRACENE (5.00%)	Compound	COMMERCIAL					
	PETN (6.00%)	Compound						
	BA NITRATE (33.00%)	Compound						
	SB SULFIDE (16.00%)	Compound	MIL-A-159					
	PEP (PRIMER COMP FED #200) (ALT)	Part	COMMERCIAL		0.3900	GR	1.0000	
9354609*2	WHITE KRAFT PAPER (PAPER)	Part	COMMERCIAL				1.0000	
9354609*3	ANVIL (CU ALLOY)	Part	COMMERCIAL	//260///			1.0000	
								0.01850400

USADACS - MIDAS DETAILED STRUCTURE FOR A MUNITION (LESS BULK ITEMS)

06/09/97

Nomenclature: CTG CAL .38 SPEC BALL M41

NSN: 1305000286629 DODIC: A400 Reported Weight: 203.0000 GR (0.0290 LB)

DRAWING #	NOMENCLATURE	TYPE	SPECIFICATION	TGCS	-- REPORTED --- WEIGHT	UNIT	FACTOR	FACTORED WEIGHT(LB)
7553580	CTG CAL .38 SPEC BALL M41	Munition	MIL-C-46409		203.0000	GR	1.0000	
7553580	CTG CAL .38 SPEC BALL M41	Component	MIL-C-46409				1.0000	
7553601	CASE (CU ALLOY)	Part	MIL-C-50	//260///	63.5000	GR	1.0000	0.00907200
12902905	CASE (CU ALLOY) (ALT)	Part	MIL-C-50		63.5000	GR	1.0000	
	PROP SR7325 (PROP SR7325)	Part	10535446		4.8000	GR	1.0000	0.00068600
	NC (N 13.15%) (98.52%)	Compound	MIL-N-244					
	DIPHENYLAMINE (0.88%)	Compound	MIL-D-98					
	GRAPHITE (0.40%)	Compound	MIL-G-155					
	DINITROTOLUENE (0.20%)	Compound	MIL-D-204					
	PROP HPC 1 (PROP HPC 1) (ALT)	Part	10534810		4.8000	GR	1.0000	
	NC (N 13.25%) (58.85%)	Compound	MIL-N-244					
	GRAPHITE (0.40%)	Compound	MIL-G-155					
	NITROGLYCERIN (38.75%)	Compound	MIL-N-246					
	ETHYL CENTRALITE (0.75%)	Compound	MIL-E-255					
	K SULFATE (1.25%)	Compound	MIL-P-193					
8596412*3	PRIMER PERC 108M	Component			3.0000	GR	1.0000	
	PEP (PRIMER MIX #864)	Part	COMMERCIAL		0.4200	GR	1.0000	0.00006000
	PB STYPHNATE (40.00%)	Compound	MIL-L-757					
	TETRACENE (5.00%)	Compound	MIL-T-46938					
	PETN (4.00%)	Compound	MIL-P-387					
	SB SULFIDE (16.00%)	Compound	MIL-A-159					
	BA NITRATE (30.00%)	Compound	MIL-B-162					
	AL PWDR (5.00%)	Compound	MIL-A-512					
P-7217-1B*1	CUP PRIMER (CU ALLOY)	Part	MIL-C-50	//260///			1.0000	
P-7217-1B*2	DISC (KRAFT PAPER)	Part	COMMERCIAL				1.0000	
P-7217-1B*3	ANVIL (CU ALLOY)	Part	MIL-C-50				1.0000	
8596412*5	PRIMER PERC #49 (ALT)	Component	COMMERCIAL		3.0000	GR	1.0000	
	PEP (PRIMER MIX #5061(DRY))	Part	MIL-P-46610		0.3500	GR	1.0000	
	PB STYPHNATE (38.00%)	Compound	MIL-L-757					
	SB SULFIDE (9.00%)	Compound	MIL-A-159					
	TETRACENE (2.00%)	Compound	MIL-T-46938					
	BA NITRATE (43.00%)	Compound	MIL-B-162					
	CA SILICIDE (8.00%)	Compound	MIL-C-324					
8596412*1	CUP PRIMER (CU ALLOY)	Part	MIL-C-50	//260///			1.0000	
8596412*2	DISC (KRAFT PAPER)	Part	COMMERCIAL				1.0000	
8596412*3	ANVIL (CU ALLOY)	Part	MIL-C-50	//260///			1.0000	
8596412*2	PRIMER PERC #100 (ALT)	Component	COMMERCIAL		3.0000	GR	1.0000	
8596412*1	CUP PRIMER (CU ALLOY)	Part	MIL-C-50	//260///			1.0000	
	PEP (PRIMER MIX K-75)	Part	COMMERCIAL		0.3800	GR	1.0000	
	PB STYPHNATE (39.00%)	Compound	MIL-L-16355					
	TETRACENE (3.00%)	Compound	MIL-T-46938					
	BA NITRATE (41.00%)	Compound	MIL-B-162					
	SB SULFIDE (19.00%)	Compound	MIL-A-159					
	NC (6.00%)	Compound	MIL-N-244					
8596412*2	DISC (KRAFT PAPER)	Part	COMMERCIAL				1.0000	
8596412*3	ANVIL (CU ALLOY)	Part	MIL-C-50	//260///			1.0000	
8596412*1	PRIMER PERC #500 (ALT)	Component			3.0000	GR	1.0000	
8596412*1	CUP PRIMER (CU ALLOY)	Part	MIL-C-50	//260///			1.0000	
	PEP (PRIMER MIX #9)	Part	COMMERCIAL		0.3860	GR	1.0000	
	PB STYPHNATE (30.00%)	Compound	MIL-L-757					
	TETRACENE (4.00%)	Compound	MIL-T-46938					
	SB SULFIDE (14.00%)	Compound	MIL-A-159					

USADACS - MIDAS DETAILED STRUCTURE FOR A MUNITION (LESS BULK ITEMS)

06/09/97

Nomenclature: CTG CAL .38 SPEC BALL M41

NSN: 1305000286629 DODIC: A400 Reported Weight: 203.0000 GR (0.0290 LB)

DRAWING #	NOMENCLATURE	TYPE	SPECIFICATION	TGCS	-- REPORTED --- WEIGHT	UNIT	FACTOR	FACTORED WEIGHT(LB)
	PETN (4.00%)	Compound	MIL-P-387					
	BA NITRATE (43.00%)	Compound	MIL-B-162					
	PB OXIDE (5.00%)	Compound	COMMERCIAL					
8596412*2	DISC (KRAFT PAPER)	Part	COMMERCIAL				1.0000	
8596412*3	ANVIL (CU ALLOY)	Part	MIL-C-50	//260///			1.0000	
7553602	BULLET M41	Component			132.0000	GR	1.0000	
7553602-1	SLUG (PB SB)	Part	MIL-L-13283	//1///	109.0000	GR	1.0000	0.01557200
7553602-2	JACKET (CU ALLOY)	Part	MIL-C-21768	//220///	23.0000	GR	1.0000	0.00328600
12902904	BULLET M41 (ALT)	Component			132.0000	GR	1.0000	
12902904-1	SLUG (PB SB)	Part	MIL-L-13283	//1///	109.0000	GR	1.0000	
12902904-2	JACKET (CU ALLOY)	Part	MIL-C-21768	//220///	23.0000	GR	1.0000	
								0.02867600

USADACS - MIDAS DETAILED STRUCTURE FOR A MUNITION (LESS BULK ITEMS)

06/09/97

Nomenclature: CTG CAL .45 BALL M1911

NSN: 1305000286613 DODIC: A475 Reported Weight: 331.0000 GR (0.0473 LB)

DRAWING #	NOMENCLATURE	TYPE	SPECIFICATION	TGCS	-- REPORTED --- WEIGHT	UNIT	FACTOR	FACTORED WEIGHT(LB)
6000503	CTG CAL .45 BALL M1911	Munition	MIL-C-1311		331.0000	GR	1.0000	
6000503	CTG CAL .45 BALL M1911	Component	MIL-C-1311				1.0000	
6000501	CASE (CU ALLOY)	Part	MIL-C-50	//260///	93.0000	GR	1.0000	0.01328600
	PROP SR7970 (PROP SR7970)	Part	10534790		5.0000	GR	1.0000	0.00071400
	DIPHENYLAMINE (0.86%)	Compound	MIL-D-98					
	DINTIROTOLUENE (2.50%)	Compound	MIL-D-204					
	GRAPHITE (0.40%)	Compound	MIL-G-155					
	NC (N 13.15%) (96.24%)	Compound	MIL-N-244					
	PROP HPC 18 (PROP HPC 18) (ALT)	Part	11744212		5.0000	GR	1.0000	
	ETHYL CENTRALITE (1.05%)	Compound	MIL-E-255					
	GRAPHITE (0.50%)	Compound	MIL-G-155					
	K NITRATE (0.50%)	Compound	MIL-P-156					
	K SULFATE (0.50%)	Compound	MIL-P-193					
	NC (N 13.15%) (76.95%)	Compound	MIL-N-244					
	NITROGLYCERIN (20.00%)	Compound	MIL-N-246					
	C BLACK (0.50%)	Compound	MIL-C-306					
7645336*2	PRIMER PERC 111M	Component	MIL-P-46610		5.0000	GR	1.0000	
	PEP (PRIMER MIX #295A)	Part	COMMERCIAL		0.4600	GR	1.0000	0.00006600
	PB STYPHNATE (37.00%)	Compound	MIL-L-757					
	TETRACENE (5.00%)	Compound	MIL-T-46938					
	PETN (5.00%)	Compound	MIL-P-387					
	BA NITRATE (29.00%)	Compound	MIL-B-162					
	SB SULFIDE (19.00%)	Compound	MIL-A-159					
	PB THIOCYANATE (5.00%)	Compound	MIL-L-65					
P-7217-12*1	CUP PRIMER (CU ALLOY)	Part	MIL-C-50	//260///			1.0000	
P-7217-12*2	DISC (KRAFT PAPER)	Part	COMMERCIAL				1.0000	
P-7217-12*3	ANVIL (CU ALLOY)	Part	MIL-C-50				1.0000	
9395613	PRIMER PERC #150 (ALT)	Component	MIL-P-46610		5.0000	GR	1.0000	
	PEP (PRIMER MIX K-75)	Part	COMMERCIAL		0.5000	GR	1.0000	
	PB STYPHNATE (39.00%)	Compound	MIL-L-16355					
	TETRACENE (3.00%)	Compound	MIL-T-46938					
	BA NITRATE (41.00%)	Compound	MIL-B-162					
	SB SULFIDE (19.00%)	Compound	MIL-A-159					
	NC (6.00%)	Compound	MIL-N-244					
P445	CUP PRIMER (BRS)	Part	COMMERCIAL		175.0000	MG	1.0000	
P369	ANVIL (BRS)	Part	COMMERCIAL		85.0000	MG	1.0000	
9395613*1	DISC (KRAFT PAPER)	Part	COMMERCIAL				1.0000	
7645336*3	PRIMER PERC #73 (ALT)	Component	MIL-P-46610		5.0000	GR	1.0000	
	PEP (PRIMER MIX #5061(DRY))	Part	MIL-P-46610		0.5000	GR	1.0000	
	PB STYPHNATE (38.00%)	Compound	MIL-L-757					
	SB SULFIDE (9.00%)	Compound	MIL-A-159					
	TETRACENE (2.00%)	Compound	MIL-T-46938					
	BA NITRATE (43.00%)	Compound	MIL-B-162					
	CA SILICIDE (8.00%)	Compound	MIL-C-324					
7645336*1	CUP (CU ALLOY)	Part	MIL-C-50	//260///			1.0000	
7645336*2	DISC (KRAFT PAPER)	Part	COMMERCIAL				1.0000	
7645336*3	ANVIL (CU ALLOY)	Part	MIL-C-50	//260///			1.0000	
7645336*4	PRIMER PERC #15-025 (ALT)	Component	MIL-P-46610		5.0000	GR	1.0000	
	PEP (PRIMER MIX #604)	Part	COMMERCIAL		0.5400	GR	1.0000	
7645336*2	DISC (KRAFT PAPER)	Part	COMMERCIAL				1.0000	
7645336*3	ANVIL (CU ALLOY)	Part	MIL-C-50	//260///			1.0000	
7645336*1	CUP (CU ALLOY)	Part	MIL-C-50	//260///			1.0000	

USADACS - MIDAS DETAILED STRUCTURE FOR A MUNITION (LESS BULK ITEMS)

06/09/97

Nomenclature: CTG CAL .45 BALL M1911

NSN: 1305000286613 DODIC: A475 Reported Weight: 331.0000 GR (0.0473 LB)

DRAWING #	NOMENCLATURE	TYPE	SPECIFICATION	TGCS	-- REPORTED --- WEIGHT	UNIT	FACTOR	FACTORED WEIGHT(LB)
11731786	BULLET M1911	Component			234.0000	GR	1.0000	
11731786	SLUG (PB SB)	Part	MIL-L-13283	//1///	197.0000	GR	1.0000	0.02814300
11731785	JACKET (CU ALLOY CLAD STEEL)	Part	MIL-S-13468		34.0000	GR	1.0000	0.00485700
11731785	JACKET (CU PLATED STEEL) (ALT)	Part	JAN-S-683		34.0000	GR	1.0000	
6136799	BULLET (ALT)	Component			234.0000	GR	1.0000	
5001165	SLUG (PB SB)	Part	MIL-L-13283	//1///	197.0000	GR	1.0000	
6136800	JACKET (CU ALLOY)	Part	MIL-C-21768	//220///	37.0000	GR	1.0000	
								0.04706600

USADACS - MIDAS DETAILED STRUCTURE FOR A MUNITION (LESS BULK ITEMS)

06/09/97

Nomenclature: CTG CAL .45 BALL MATCH M1911

NSN: 1305008922526 DODIC: A483 Reported Weight: 334.0000 GR (0.0477 LB)

DRAWING #	NOMENCLATURE	TYPE	SPECIFICATION	TGCS	-- REPORTED --- WEIGHT	UNIT	FACTOR	FACTORED WEIGHT(LB)
8596136	CTG CAL .45 BALL MATCH M1911	Munition	MIL-C-46482		334.0000	GR	1.0000	
6000501	CASE (CU ALLOY)	Part	MIL-C-50	//260///	93.0000	GR	1.0000	0.01328600
	PROP SR7970 (PROP SR7970)	Part	10534790		5.0000	GR	1.0000	0.00071400
	DIPHENYLAMINE (0.86%)	Compound	MIL-D-98					
	DINTIROTOLUENE (2.50%)	Compound	MIL-D-204					
	GRAPHITE (0.40%)	Compound	MIL-G-155					
	NC (N 13.15%) (96.24%)	Compound	MIL-N-244					
	PROP HPC 18 (PROP HPC 18) (ALT)	Part	11744212		5.0000	GR	1.0000	
	ETHYL CENTRALITE (1.05%)	Compound	MIL-E-255					
	GRAPHITE (0.50%)	Compound	MIL-G-155					
	K NITRATE (0.50%)	Compound	MIL-P-156					
	K SULFATE (0.50%)	Compound	MIL-P-193					
	NC (N 13.15%) (76.95%)	Compound	MIL-N-244					
	NITROGLYCERIN (20.00%)	Compound	MIL-N-246					
	C BLACK (0.50%)	Compound	MIL-C-306					
7645336*2	PRIMER PERC 111M	Component	MIL-P-46610		5.0000	GR	1.0000	
	PEP (PRIMER MIX #295A)	Part	COMMERCIAL		0.4600	GR	1.0000	0.00006600
	PB STYPHNATE (37.00%)	Compound	MIL-L-757					
	TETRACENE (5.00%)	Compound	MIL-T-46938					
	PETN (5.00%)	Compound	MIL-P-387					
	BA NITRATE (29.00%)	Compound	MIL-B-162					
	SB SULFIDE (19.00%)	Compound	MIL-A-159					
	PB THIOCYANATE (5.00%)	Compound	MIL-L-65					
P-7217-12*1	CUP PRIMER (CU ALLOY)	Part	MIL-C-50	//260///			1.0000	
P-7217-12*2	DISC (KRAFT PAPER)	Part	COMMERCIAL				1.0000	
P-7217-12*3	ANVIL (CU ALLOY)	Part	MIL-C-50				1.0000	
9395613	PRIMER PERC #150 (ALT)	Component	MIL-P-46610		5.0000	GR	1.0000	
	PEP (PRIMER MIX K-75)	Part	COMMERCIAL		0.5000	GR	1.0000	
	PB STYPHNATE (39.00%)	Compound	MIL-L-16355					
	TETRACENE (3.00%)	Compound	MIL-T-46938					
	BA NITRATE (41.00%)	Compound	MIL-B-162					
	SB SULFIDE (19.00%)	Compound	MIL-A-159					
	NC (6.00%)	Compound	MIL-N-244					
P445	CUP PRIMER (BRS)	Part	COMMERCIAL		175.0000	MG	1.0000	
P369	ANVIL (BRS)	Part	COMMERCIAL		85.0000	MG	1.0000	
9395613*1	DISC (KRAFT PAPER)	Part	COMMERCIAL				1.0000	
7645336*3	PRIMER PERC #73 (ALT)	Component	MIL-P-46610		5.0000	GR	1.0000	
	PEP (PRIMER MIX #5061(DRY))	Part	MIL-P-46610		0.5000	GR	1.0000	
	PB STYPHNATE (38.00%)	Compound	MIL-L-757					
	SB SULFIDE (9.00%)	Compound	MIL-A-159					
	TETRACENE (2.00%)	Compound	MIL-T-46938					
	BA NITRATE (43.00%)	Compound	MIL-B-162					
	CA SILICIDE (8.00%)	Compound	MIL-C-324					
7645336*1	CUP (CU ALLOY)	Part	MIL-C-50	//260///			1.0000	
7645336*2	DISC (KRAFT PAPER)	Part	COMMERCIAL				1.0000	
7645336*3	ANVIL (CU ALLOY)	Part	MIL-C-50	//260///			1.0000	
7645336*4	PRIMER PERC #15-025 (ALT)	Component	MIL-P-46610		5.0000	GR	1.0000	
	PEP (PRIMER MIX #604)	Part	COMMERCIAL		0.5400	GR	1.0000	
7645336*2	DISC (KRAFT PAPER)	Part	COMMERCIAL				1.0000	
7645336*3	ANVIL (CU ALLOY)	Part	MIL-C-50	//260///			1.0000	
7645336*1	CUP (CU ALLOY)	Part	MIL-C-50	//260///			1.0000	
6136799	BULLET	Component			234.0000	GR	1.0000	

USADACS - MIDAS DETAILED STRUCTURE FOR A MUNITION (LESS BULK ITEMS)

06/09/97

Nomenclature: CTG CAL .45 BALL MATCH M1911

NSN: 1305008922526 DODIC: A483 Reported Weight: 334.0000 GR (0.0477 LB)

DRAWING #	NOMENCLATURE	TYPE	SPECIFICATION	TGCS	-- REPORTED --- WEIGHT	UNIT	FACTOR	FACTORED WEIGHT(LB)
5001165	SLUG (PB SB)	Part	MIL-L-13283	//1///	197.0000	GR	1.0000	0.02814300
6136800	JACKET (CU ALLOY)	Part	MIL-C-21768	//220///	37.0000	GR	1.0000	0.00528600
								0.04749500

USADACS - MIDAS DETAILED STRUCTURE FOR A MUNITION (LESS BULK ITEMS)

06/09/97

Nomenclature: CTG CAL .50 BALL M2 LNKD

NSN: 1305000286339 DODIC: A555 Reported Weight: 1813.0000 GR (0.2590 LB)

DRAWING #	NOMENCLATURE	TYPE	SPECIFICATION	TGCS	-- REPORTED --- WEIGHT	UNIT	FACTOR	FACTORED WEIGHT(LB)
5577960	CTG CAL .50 BALL M2 LNKD	Munition	MIL-C-13783		1813.0000	GR	1.0000	
5577960	CTG CAL .50 BALL M2	Component	MIL-C-13783		1813.0000	GR	1.0000	
5502646	CASE (BRS)	Part	ASTM-B36	//260///	870.0000	GR	1.0000	0.12428800
	PROP WC860 (PROP WC860)	Part	10534811		235.0000	GR	1.0000	0.03357200
	GRAPHITE (0.40%)	Compound	MIL-G-155					
	K NITRATE (0.80%)	Compound	MIL-P-156					
	NA SULFATE (0.50%)	Compound	MIL-S-50004					
	CA CARBONATE (1.00%)	Compound	MIL-C-293					
	NITROGLYCERIN (9.50%)	Compound	MIL-N-246					
	DIPHENYLAMINE (1.13%)	Compound	MIL-D-98					
	DIBUTYLPHTHALATE (8.00%)	Compound	MIL-D-218					
	NC (N 13.15%) (78.67%)	Compound	MIL-N-244					
7645339*4	PRIMER PERC #50M	Component	MIL-P-46610		18.5000	GR	1.0000	
10534280	CUP PRIMER (CU ALLOY)	Part	MIL-C-50	//260//CITRIC/	2.5000	GR	1.0000	0.00035700
8594096	ANVIL (CU ALLOY)	Part	MIL-C-50	//260//SHELLAC/	1.0700	GR	1.0000	0.00015300
8594098	DISC (PAPER SEALING)	Part	MIL-P-60169	////LACQUER/	0.0410	GR	1.0000	0.00000600
	PEP (PRIMER MIX #5061W)	Part	7259096		2.2500	GR	1.0000	0.00032100
	BA NITRATE (43.00%)	Compound	MIL-B-162	///1//				
	SB SULFIDE (9.00%)	Compound	MIL-A-159	///1,2 OR 3//				
	PB STYPHNATE (38.00%)	Compound	MIL-L-757					
	TETRACENE (2.00%)	Compound	MIL-T-46938					
	CA SILICIDE (8.00%)	Compound	MIL-C-324	///2//				
7645339*1	PRIMER PERC #315 (ALT)	Component	MIL-P-46610				1.0000	
	PEP (PRIMER MIX K-75)	Part	COMMERCIAL		2.7000	GR	1.0000	
	PB STYPHNATE (39.00%)	Compound	MIL-L-16355					
	TETRACENE (3.00%)	Compound	MIL-T-46938					
	BA NITRATE (41.00%)	Compound	MIL-B-162					
	SB SULFIDE (19.00%)	Compound	MIL-A-159					
	NC (6.00%)	Compound	MIL-N-244					
7645339*1	CUP PRIMER (CU ALLOY)	Part	MIL-C-50	//260//CITRIC/	2.5000	GR	1.0000	
7645339*2	DISC (PAPER SEALING)	Part	MIL-P-60169	////LACQUER/	0.0410	GR	1.0000	
7645339*3	ANVIL (CU ALLOY)	Part	MIL-C-50	//260//SHELLAC/	1.0700	GR	1.0000	
10534630	PRIMER PERC #35 (ALT)	Component	MIL-P-46610		18.5000	GR	1.0000	
5033179	CUP PRIMER (CU ALLOY)	Part	MIL-C-50		2.5000	GR	1.0000	
10534631	PELLET (PRIMER MIX FA-958)	Part	10521776		1.9000	GR	1.0000	
	SB SULFIDE (12.00%)	Compound	MIL-A-159	/1//1,2 OR 3//				
	BA NITRATE (39.00%)	Compound	MIL-B-162	///1//				
	PB STYPHNATE (28.00%)	Compound	MIL-L-757					
	TETRACENE (3.00%)	Compound	MIL-T-46938					
	PETN (8.00%)	Compound	MIL-P-387	///2//				
	AL PWDR (10.00%)	Compound	MIL-A-512	/1/A/1//				
5033181	DISC (PAPER SEALING)	Part	MIL-P-60169				1.0000	
5033180	ANVIL (CU ALLOY)	Part	MIL-C-50				1.0000	
7645339*3	PRIMER PERC #257 (ALT)	Component	MIL-P-46610		18.5000	GR	1.0000	
7645339*1	CUP PRIMER (CU ALLOY)	Part	MIL-C-50	//260//CITRIC/	2.5000	GR	1.0000	
7645339*2	DISC (PAPER SEALING)	Part	MIL-P-60169	////LACQUER/	0.0410	GR	1.0000	
7645339*3	ANVIL (CU ALLOY)	Part	MIL-C-50	//260//SHELLAC/	1.0700	GR	1.0000	
	PEP (PRIMER MIX #257)	Part	MIL-P-749		2.1000	GR	1.0000	
	PB STYPHNATE (36.00%)	Compound	MIL-L-757					
	TETRACENE (4.00%)	Compound	MIL-T-46938					
	PETN (5.00%)	Compound	MIL-P-387	///2//				
	BA NITRATE (33.00%)	Compound	MIL-B-162					

USADACS - MIDAS DETAILED STRUCTURE FOR A MUNITION (LESS BULK ITEMS)

06/09/97

Nomenclature: CTG CAL .50 BALL M2 LNKD

NSN: 1305000286339 DODIC: A555 Reported Weight: 1813.0000 GR (0.2590 LB)

DRAWING #	NOMENCLATURE	TYPE	SPECIFICATION	TGCS	-- REPORTED --- WEIGHT	UNIT	FACTOR	FACTORED WEIGHT(LB)
	SB SULFIDE (13.00%)	Compound	MIL-A-159	///A,B//				
	AL PWDR (7.00%)	Compound	MIL-A-512	/C//C//				
	SOLVENT (2.00%)	Compound						
6171990	BULLET	Component			709.5000	GR	1.0000	
6171991	CORE (STEEL)	Part	ASTM-A108		400.0000	GR	1.0000	0.05714400
6137656	JACKET (CU ALLOY)	Part	MIL-C-21768		253.0000	GR	1.0000	0.03614400
6137658	POINT FILLER (PB SB)	Part	MIL-L-13283	//1///	56.5000	GR	1.0000	0.00807200
								0.26005700

USADACS - MIDAS DETAILED STRUCTURE FOR A MUNITION (LESS BULK ITEMS)

Nomenclature: CTG CAL .50 BALL M33 LNKD
NSN: 1305000286574 DODIC: A555 Reported Weight: 0.3844 LB

DRAWING #	NOMENCLATURE	TYPE	SPECIFICATION	TGCS	-- REPORTED --- WEIGHT	UNIT	FACTOR	FACTORED WEIGHT(LB)
7553097	CTG CAL .50 BALL M33 LNKD	Munition			0.3844	LB	1.0000	
7553097	CTG CAL .50 BALL M33	Component	MIL-C-10190		1782.0000	GR	1.0000	
	PROP WC860 (PROP WC860)	Part	10534811		233.0000	GR	1.0000	0.03328600
	GRAPHITE (0.40%)	Compound	MIL-G-155					
	K NITRATE (0.80%)	Compound	MIL-P-156					
	NA SULFATE (0.50%)	Compound	MIL-S-50004					
	CA CARBONATE (1.00%)	Compound	MIL-C-293					
	NITROGLYCERIN (9.50%)	Compound	MIL-N-246					
	DIPHENYLAMINE (1.13%)	Compound	MIL-D-98					
	DIBUTYLPHTHALATE (8.00%)	Compound	MIL-D-218					
	NC (N 13.15%) (78.67%)	Compound	MIL-N-244					
	PROP IMR 5010 (PROP IMR 5010) (ALT)	Part	10534796		233.0000	GR	1.0000	
	DIPHENYLAMINE (0.88%)	Compound	MIL-D-98					
	GRAPHITE (0.40%)	Compound	MIL-G-155					
	DINITROTOLUENE (8.25%)	Compound	MIL-D-204					
	K SULFATE (0.55%)	Compound	MIL-P-193					
	NC (N 13.15%) (89.92%)	Compound	MIL-N-244					
5502646	CASE (BRS)	Part	ASTM-B36	//260///	870.0000	GR	1.0000	0.12428800
7553098	BULLET M33	Component			661.5000	GR	1.0000	
6174992	JACKET (BRS)	Part	ASTM-B36	//220///	235.0000	GR	1.0000	0.03357200
7553098-1	FILLER POINT (NA CARBONATE MONOHYDRATE)	Part	O-C-275		15.0000	GR	1.0000	0.00214300
7553098-1	FILLER POINT (FILLER IF6B) (ALT)	Part	7553098		15.0000	GR	1.0000	
6171991	CORE (STEEL)	Part	ASTM-A108		400.0000	GR	1.0000	0.05714400
7577031	FILLER BASE (PB SB)	Part	MIL-L-13283	//2///	11.5000	GR	1.0000	0.00164300
7645339*4	PRIMER PERC #50M	Component	MIL-P-46610		18.5000	GR	1.0000	
10534280	CUP PRIMER (CU ALLOY)	Part	MIL-C-50	//260//CITRIC/	2.5000	GR	1.0000	0.00035700
8594096	ANVIL (CU ALLOY)	Part	MIL-C-50	//260//SHELLAC/	1.0700	GR	1.0000	0.00015300
8594098	DISC (PAPER SEALING)	Part	MIL-P-60169	////LACQUER/	0.0410	GR	1.0000	0.00000600
	PEP (PRIMER MIX #5061W)	Part	7259096		2.2500	GR	1.0000	0.00032100
	BA NITRATE (43.00%)	Compound	MIL-B-162	///1//				
	SB SULFIDE (9.00%)	Compound	MIL-A-159	///1,2 OR 3//				
	PB STYPHNATE (38.00%)	Compound	MIL-L-757					
	TETRACENE (2.00%)	Compound	MIL-T-46938					
	CA SILICIDE (8.00%)	Compound	MIL-C-324	///2//				
7645339*3	PRIMER PERC #257 (ALT)	Component	MIL-P-46610		18.5000	GR	1.0000	
7645339*1	CUP PRIMER (CU ALLOY)	Part	MIL-C-50	//260//CITRIC/	2.5000	GR	1.0000	
7645339*2	DISC (PAPER SEALING)	Part	MIL-P-60169	////LACQUER/	0.0410	GR	1.0000	
7645339*3	ANVIL (CU ALLOY)	Part	MIL-C-50	//260//SHELLAC/	1.0700	GR	1.0000	
	PEP (PRIMER MIX #257)	Part	MIL-P-749		2.1000	GR	1.0000	
	PB STYPHNATE (36.00%)	Compound	MIL-L-757					
	TETRACENE (4.00%)	Compound	MIL-T-46938					
	PETN (5.00%)	Compound	MIL-P-387	///2//				
	BA NITRATE (33.00%)	Compound	MIL-B-162					
	SB SULFIDE (13.00%)	Compound	MIL-A-159	///A,B//				
	AL PWDR (7.00%)	Compound	MIL-A-512	/C//C//				
	SOLVENT (2.00%)	Compound						
10534630	PRIMER PERC #35 (ALT)	Component	MIL-P-46610		18.5000	GR	1.0000	
5033179	CUP PRIMER (CU ALLOY)	Part	MIL-C-50		2.5000	GR	1.0000	
10534631	PELLET (PRIMER MIX FA-958)	Part	10521776		1.9000	GR	1.0000	
	SB SULFIDE (12.00%)	Compound	MIL-A-159	/1//1,2 OR 3//				
	BA NITRATE (39.00%)	Compound	MIL-B-162	///1//				
	PB STYPHNATE (28.00%)	Compound	MIL-L-757					

USADACS - MIDAS DETAILED STRUCTURE FOR A MUNITION (LESS BULK ITEMS)

06/09/97

Nomenclature: CTG CAL .50 BALL M33 LNKD

NSN: 1305000286574 DODIC: A555 Reported Weight: 0.3844 LB

DRAWING #	NOMENCLATURE	TYPE	SPECIFICATION	TGCS	-- REPORTED --- WEIGHT	UNIT	FACTOR	FACTORED WEIGHT(LB)
	TETRACENE (3.00%)	Compound	MIL-T-46938					
	PETN (8.00%)	Compound	MIL-P-387	///2//				
	AL PWDR (10.00%)	Compound	MIL-A-512	/1/A/1//				
5033181	DISC (PAPER SEALING)	Part	MIL-P-60169				1.0000	
5033180	ANVIL (CU ALLOY)	Part	MIL-C-50				1.0000	
7645339*1	PRIMER PERC #315 (ALT)	Component	MIL-P-46610				1.0000	
	PEP (PRIMER MIX K-75)	Part	COMMERCIAL		2.7000	GR	1.0000	
	PB STYPHNATE (39.00%)	Compound	MIL-L-16355					
	TETRACENE (3.00%)	Compound	MIL-T-46938					
	BA NITRATE (41.00%)	Compound	MIL-B-162					
	SB SULFIDE (19.00%)	Compound	MIL-A-159					
	NC (6.00%)	Compound	MIL-N-244					
7645339*1	CUP PRIMER (CU ALLOY)	Part	MIL-C-50	//260//CITRIC/	2.5000	GR	1.0000	
7645339*2	DISC (PAPER SEALING)	Part	MIL-P-60169	////LACQUER/	0.0410	GR	1.0000	
7645339*3	ANVIL (CU ALLOY)	Part	MIL-C-50	//260//SHELLAC/	1.0700	GR	1.0000	
4116-14	PKG FOR NSN 1305000286574	Component					1.0000	
4116/14	PALLET 40" X 48" (WOOD)	Part	MIL-P-15011	/1//1/1/	80.0000	LB	0.0001	0.00800000
7553296	CNTR MTL M2A1 (STEEL)	Part	ASTM-A109		5.5000	LB	0.0012	0.00660000
7553296	CNTR MTL M2A1 (STEEL) (ALT)	Part	ASTM-A568		5.5000	LB	0.0012	
9332394-1	FILLER SIDE (FIBERBOARD)	Part	PPP-F-320	/SF/175///	0.0750	LB	0.0012	0.00009000
9349397	PAD HONEYCOMB CELL (KRAFT PAPER) (ALT)	Part	COMMERCIAL				0.0060	
7553302	GASKET COVER (RUBBER)	Part	MIL-R-3065	//410/RS//			0.0060	
8794342	SEAL METALLIC (PB ALLOY)	Part	QQ-L-201	/1////	0.0039	LB	0.0060	0.00002340
8794342	SEAL METALLIC (PB ALLOY) (ALT)	Part	QQ-L-201	/2////	0.0039	LB	0.0060	
8794342	SEAL METALLIC (ZN) (ALT)	Part	COMMERCIAL		27.0000	GR	0.0060	
7140393	LINK CTG M9 (STEEL)	Part	ASTM-A684	//1050-65///	273.0000	GR	1.0000	0.03900100
12576456	PKG/MKG FOR WRBND BX M2A1	Component					1.0000	
7553347	BOX WRBD ASSY	Component	MIL-B-46506				0.0060	
7553347-4	BOX WRBD (WOOD WIREBOUND)	Part	MIL-B-46506		5.7500	LB	0.0004	
7553347-3	END BOX WRBD (WOOD)	Part	PPP-B-585		1.0000	LB	0.0008	
7553347-1	SEPARATOR (FIBERBOARD)	Part	MIL-F-50449				1.0000	
7553347-1	SEPARATOR (POLYETHYLENE FOAM) (ALT)	Part	PPP-C-1752	/1/A///			1.0000	
7553347-1	SEPARATOR (PLASTIC) (ALT)	Part	MIL-P-83668	/2////			1.0000	
7553347-2	FIILER ENDS (FIBERBOARD)	Part	MIL-F-50449				1.0000	
7553347-2	FILLER ENDS (POLYETHYLENE FOAM) (ALT)	Part	PPP-C-1752	/1/A///			1.0000	
7553347-2	FILLER ENDS (PLASTIC) (ALT)	Part	MIL-P-83668	/2////			1.0000	
								0.30662740

USADACS - MIDAS DETAILED STRUCTURE FOR A MUNITION (LESS BULK ITEMS)

Nomenclature: CTG CAL .50 4 BALL M33/1 TR M17 LNKD M9
NSN: 1305000286583 DODIC: A557 Reported Weight: 0.3844 LB

DRAWING #	NOMENCLATURE	TYPE	SPECIFICATION	TGCS	-- REPORTED --- WEIGHT	UNIT	FACTOR	FACTORED WEIGHT(LB)
10542439	CTG CAL .50 4 BALL M33/1 TR M17 LNKD M9	Munition			0.3844	LB	1.0000	
7672165	CTG CAL .50 TR M17	Component	MIL-C-1318		1737.0000	GR	0.2000	
5502646	CASE (BRS)	Part	ASTM-B36	//260///	870.0000	GR	1.0000	0.02485760
	PROP IMR 5010 (PROP IMR 5010)	Part	10534796		225.0000	GR	1.0000	0.00642880
	DIPHENYLAMINE (0.88%)	Compound	MIL-D-98					
	GRAPHITE (0.40%)	Compound	MIL-G-155					
	DINITROTOLUENE (8.25%)	Compound	MIL-D-204					
	K SULFATE (0.55%)	Compound	MIL-P-193					
	NC (N 13.15%) (89.92%)	Compound	MIL-N-244					
7645339*4	PRIMER PERC #50M	Component	MIL-P-46610		18.5000	GR	1.0000	
10534280	CUP PRIMER (CU ALLOY)	Part	MIL-C-50	//260//CITRIC/	2.5000	GR	1.0000	0.00007140
8594096	ANVIL (CU ALLOY)	Part	MIL-C-50	//260//SHELLAC/	1.0700	GR	1.0000	0.00003060
8594098	DISC (PAPER SEALING)	Part	MIL-P-60169	////LACQUER/	0.0410	GR	1.0000	0.00000120
	PEP (PRIMER MIX #5061W)	Part	7259096		2.2500	GR	1.0000	0.00006420
	BA NITRATE (43.00%)	Compound	MIL-B-162	///1//				
	SB SULFIDE (9.00%)	Compound	MIL-A-159	///1,2 OR 3//				
	PB STYPHNATE (38.00%)	Compound	MIL-L-757					
	TETRACENE (2.00%)	Compound	MIL-T-46938					
	CA SILICIDE (8.00%)	Compound	MIL-C-324	///2//				
7645339*1	PRIMER PERC #315 (ALT)	Component	MIL-P-46610				1.0000	
	PEP (PRIMER MIX K-75)	Part	COMMERCIAL		2.7000	GR	1.0000	
	PB STYPHNATE (39.00%)	Compound	MIL-L-16355					
	TETRACENE (3.00%)	Compound	MIL-T-46938					
	BA NITRATE (41.00%)	Compound	MIL-B-162					
	SB SULFIDE (19.00%)	Compound	MIL-A-159					
	NC (6.00%)	Compound	MIL-N-244					
7645339*1	CUP PRIMER (CU ALLOY)	Part	MIL-C-50	//260//CITRIC/	2.5000	GR	1.0000	
7645339*2	DISC (PAPER SEALING)	Part	MIL-P-60169	////LACQUER/	0.0410	GR	1.0000	
7645339*3	ANVIL (CU ALLOY)	Part	MIL-C-50	//260//SHELLAC/	1.0700	GR	1.0000	
7645339*3	PRIMER PERC #257 (ALT)	Component	MIL-P-46610		18.5000	GR	1.0000	
7645339*1	CUP PRIMER (CU ALLOY)	Part	MIL-C-50	//260//CITRIC/	2.5000	GR	1.0000	
7645339*2	DISC (PAPER SEALING)	Part	MIL-P-60169	////LACQUER/	0.0410	GR	1.0000	
7645339*3	ANVIL (CU ALLOY)	Part	MIL-C-50	//260//SHELLAC/	1.0700	GR	1.0000	
	PEP (PRIMER MIX #257)	Part	MIL-P-749		2.1000	GR	1.0000	
	PB STYPHNATE (36.00%)	Compound	MIL-L-757					
	TETRACENE (4.00%)	Compound	MIL-T-46938					
	PETN (5.00%)	Compound	MIL-P-387	///2//				
	BA NITRATE (33.00%)	Compound	MIL-B-162					
	SB SULFIDE (13.00%)	Compound	MIL-A-159	///A,B//				
	AL PWDR (7.00%)	Compound	MIL-A-512	/C//C//				
	SOLVENT (2.00%)	Compound						
10534630	PRIMER PERC #35 (ALT)	Component	MIL-P-46610		18.5000	GR	1.0000	
5033179	CUP PRIMER (CU ALLOY)	Part	MIL-C-50		2.5000	GR	1.0000	
10534631	PELLET (PRIMER MIX FA-958)	Part	10521776		1.9000	GR	1.0000	
	SB SULFIDE (12.00%)	Compound	MIL-A-159	/1//1,2 OR 3//				
	BA NITRATE (39.00%)	Compound	MIL-B-162	///1//				
	PB STYPHNATE (28.00%)	Compound	MIL-L-757					
	TETRACENE (3.00%)	Compound	MIL-T-46938					
	PETN (8.00%)	Compound	MIL-P-387	///2//				
	AL PWDR (10.00%)	Compound	MIL-A-512	/1/A/1//				
5033181	DISC (PAPER SEALING)	Part	MIL-P-60169				1.0000	
5033180	ANVIL (CU ALLOY)	Part	MIL-C-50				1.0000	

USADACS - MIDAS DETAILED STRUCTURE FOR A MUNITION (LESS BULK ITEMS)

Nomenclature: CTG CAL .50 4 BALL M33/1 TR M17 LNKD M9
NSN: 1305000286583 DODIC: A557 Reported Weight: 0.3844 LB

DRAWING #	NOMENCLATURE	TYPE	SPECIFICATION	TGCS	-- REPORTED --- WEIGHT	UNIT	FACTOR	FACTORED WEIGHT(LB)
12953486	BULLET M17	Component			615.0000	GR	1.0000	
6174992	JACKET (BRS)	Part	ASTM-B36	//220///	235.0000	GR	1.0000	0.00671440
12953485	CORE (STEEL)	Part	ASTM-A108		352.0000	GR	1.0000	0.01005740
	PEP (IGN COMP I-280*2)	Part	10522421		0.2428	GR	1.0000	0.00000700
	CA RESINATE (8.50%)	Compound	MIL-C-20470	/1 OR 2////				
	MG PWDR (15.00%)	Compound	MIL-M-382	/3////				
	SR PEROXIDE (76.50%)	Compound	MIL-S-612	//B///				
	PEP (TRACER COMP R-256*5)	Part			0.8571	GR	1.0000	0.00002440
	CA RESINATE (1.60%)	Compound	MIL-C-20470	/2////				
	CA RESINATE (6.70%)	Compound	MIL-C-20470	/1////				
	MG PWDR (20.70%)	Compound	MIL-M-382	/3////				
	POLYVINYL CHLORIDE (6.00%)	Compound	MIL-P-20307					
	SR NITRATE (33.30%)	Compound	MIL-S-20322	//A OR B///				
	SR OXALATE (5.00%)	Compound	MIL-S-12210	//A///				
	SR PEROXIDE (26.70%)	Compound	MIL-S-612	//B///				
12953486*1	FILLER POINT (NA CARBONATE MONOHYDRATE)	Part	O-C-275		12.5000	GR	1.0000	0.00035720
12953486*2	FILLER POINT (FILLER IF6B) (ALT)	Part	12953486		12.5000	GR	1.0000	
7585150	DISC CLOSURE (CU ALLOY)	Part	MIL-C-21768	///220//	1.5000	GR	1.0000	0.00004280
7585150	DISC CLOSURE (VINYLITE) (ALT)	Part	COMMERCIAL		0.8500	GR	1.0000	
7638551	BULLET M17 (ALT)	Component			643.0000	GR	1.0000	
10542388	JACKET (CU ALLOY CLAD STEEL)	Part	MIL-S-13468	////THINNER/	365.0000	GR	1.0000	
6129833	SLUG (PB SB)	Part	MIL-L-13283	//1///	207.0000	GR	1.0000	
7585151	DISC CLOSURE (BRS)	Part	ASTM-B36	//220///	0.0150	GR	1.0000	
7585151*1	PLASTIC STRIP (POLY VINYL CHLORIDE) (ALT)	Part	L-P-535	/1/A/1//	0.8500	GR	1.0000	
	PEP (IGN COMP I-508)	Part	10522422		11.0000	GR	1.0000	
	BA PEROXIDE (79.20%)	Compound	MIL-B-153	///A//				
	PARLON (5.38%)	Compound	MIL-R-60671					
	MG PWDR (14.18%)	Compound	MIL-M-382	/3////				
	ZN STEARATE (0.94%)	Compound	COMMERCIAL	//USP///				
	TOLUIDINE RED TONER (0.30%)	Compound	TT-P-445					
	PEP (IGN COMP I-276) (ALT)	Part	10522420		11.0000	GR	1.0000	
	BA PEROXIDE (81.94%)	Compound	MIL-B-153	///A//				
	ZN STEARATE (0.85%)	Compound	USP					
	CA RESINATE (1.78%)	Compound	MIL-C-20470	/2////				
	MG PWDR (15.00%)	Compound	MIL-M-382	/3////				
	TOLUIDINE RED TONER (0.43%)	Compound	TT-P-445					
	PEP (TRACER COMP R-256*5)	Part			15.0000	GR	1.0000	
	CA RESINATE (1.60%)	Compound	MIL-C-20470	/2////				
	CA RESINATE (6.70%)	Compound	MIL-C-20470	/1////				
	MG PWDR (20.70%)	Compound	MIL-M-382	/3////				
	POLYVINYL CHLORIDE (6.00%)	Compound	MIL-P-20307					
	SR NITRATE (33.30%)	Compound	MIL-S-20322	//A OR B///				
	SR OXALATE (5.00%)	Compound	MIL-S-12210	//A///				
	SR PEROXIDE (26.70%)	Compound	MIL-S-612	//B///				
	PEP (TRACER COMP R-321)	Part	10521450		40.0000	GR	1.0000	
	POLYVINYL CHLORIDE (16.00%)	Compound	MIL-P-20307					
	SR NITRATE ANHYDROUS (52.00%)	Compound	MIL-S-20322	//A OR B///				
	RUBBER CHLORINATED (6.00%)	Compound	MIL-R-60671					
	MG PWDR (26.00%)	Compound	MIL-M-382	/3////				
	PEP (TRACER COMP R-284) (ALT)	Part	10522416		40.0000	GR	1.0000	
	POLYVINYL CHLORIDE (17.00%)	Compound	MIL-P-20307					
	SR NITRATE (55.00%)	Compound	MIL-S-20322	//A OR B///				
	MG PWDR (28.00%)	Compound	MIL-M-382	/3////				

USADACS - MIDAS DETAILED STRUCTURE FOR A MUNITION (LESS BULK ITEMS)

Nomenclature: CTG CAL .50 4 BALL M33/1 TR M17 LNKD M9
NSN: 1305000286583 DODIC: A557 Reported Weight: 0.3844 LB

DRAWING #	NOMENCLATURE	TYPE	SPECIFICATION	TGCS	-- REPORTED --- WEIGHT	UNIT	FACTOR	FACTORED WEIGHT(LB)
7553097	CTG CAL .50 BALL M33	Component	MIL-C-10190		1782.0000	GR	0.8000	
	PROP WC860 (PROP WC860)	Part	10534811		233.0000	GR	1.0000	0.02662880
	GRAPHITE (0.40%)	Compound	MIL-G-155					
	K NITRATE (0.80%)	Compound	MIL-P-156					
	NA SULFATE (0.50%)	Compound	MIL-S-50004					
	CA CARBONATE (1.00%)	Compound	MIL-C-293					
	NITROGLYCERIN (9.50%)	Compound	MIL-N-246					
	DIPHENYLAMINE (1.13%)	Compound	MIL-D-98					
	DIBUTYLPHTHALATE (8.00%)	Compound	MIL-D-218					
	NC (N 13.15%) (78.67%)	Compound	MIL-N-244					
	PROP IMR 5010 (PROP IMR 5010) (ALT)	Part	10534796		233.0000	GR	1.0000	
	DIPHENYLAMINE (0.88%)	Compound	MIL-D-98					
	GRAPHITE (0.40%)	Compound	MIL-G-155					
	DINITROTOLUENE (8.25%)	Compound	MIL-D-204					
	K SULFATE (0.55%)	Compound	MIL-P-193					
	NC (N 13.15%) (89.92%)	Compound	MIL-N-244					
5502646	CASE (BRS)	Part	ASTM-B36	//260///	870.0000	GR	1.0000	0.09943040
7553098	BULLET M33	Component			661.5000	GR	1.0000	
6174992	JACKET (BRS)	Part	ASTM-B36	//220///	235.0000	GR	1.0000	0.02685760
7553098-1	FILLER POINT (NA CARBONATE MONOHYDRATE)	Part	O-C-275		15.0000	GR	1.0000	0.00171440
7553098-1	FILLER POINT (FILLER IF6B) (ALT)	Part	7553098		15.0000	GR	1.0000	
6171991	CORE (STEEL)	Part	ASTM-A108		400.0000	GR	1.0000	0.04571520
7577031	FILLER BASE (PB SB)	Part	MIL-L-13283	//2///	11.5000	GR	1.0000	0.00131440
7645339*4	PRIMER PERC #50M	Component	MIL-P-46610		18.5000	GR	1.0000	
10534280	CUP PRIMER (CU ALLOY)	Part	MIL-C-50	//260//CITRIC/	2.5000	GR	1.0000	0.00028560
8594096	ANVIL (CU ALLOY)	Part	MIL-C-50	//260//SHELLAC/	1.0700	GR	1.0000	0.00012240
8594098	DISC (PAPER SEALING)	Part	MIL-P-60169	////LACQUER/	0.0410	GR	1.0000	0.00000480
	PEP (PRIMER MIX #5061W)	Part	7259096		2.2500	GR	1.0000	0.00025680
	BA NITRATE (43.00%)	Compound	MIL-B-162	///1//				
	SB SULFIDE (9.00%)	Compound	MIL-A-159	///1,2 OR 3//				
	PB STYPHNATE (38.00%)	Compound	MIL-L-757					
	TETRACENE (2.00%)	Compound	MIL-T-46938					
	CA SILICIDE (8.00%)	Compound	MIL-C-324	///2//				
7645339*3	PRIMER PERC #257 (ALT)	Component	MIL-P-46610		18.5000	GR	1.0000	
7645339*1	CUP PRIMER (CU ALLOY)	Part	MIL-C-50	//260//CITRIC/	2.5000	GR	1.0000	
7645339*2	DISC (PAPER SEALING)	Part	MIL-P-60169	////LACQUER/	0.0410	GR	1.0000	
7645339*3	ANVIL (CU ALLOY)	Part	MIL-C-50	//260//SHELLAC/	1.0700	GR	1.0000	
	PEP (PRIMER MIX #257)	Part	MIL-P-749		2.1000	GR	1.0000	
	PB STYPHNATE (36.00%)	Compound	MIL-L-757					
	TETRACENE (4.00%)	Compound	MIL-T-46938					
	PETN (5.00%)	Compound	MIL-P-387	///2//				
	BA NITRATE (33.00%)	Compound	MIL-B-162					
	SB SULFIDE (13.00%)	Compound	MIL-A-159	///A,B//				
	AL PWDR (7.00%)	Compound	MIL-A-512	/C//C//				
	SOLVENT (2.00%)	Compound						
10534630	PRIMER PERC #35 (ALT)	Component	MIL-P-46610		18.5000	GR	1.0000	
5033179	CUP PRIMER (CU ALLOY)	Part	MIL-C-50		2.5000	GR	1.0000	
10534631	PELLET (PRIMER MIX FA-958)	Part	10521776		1.9000	GR	1.0000	
	SB SULFIDE (12.00%)	Compound	MIL-A-159	/1//1,2 OR 3//				
	BA NITRATE (39.00%)	Compound	MIL-B-162	///1//				
	PB STYPHNATE (28.00%)	Compound	MIL-L-757					
	TETRACENE (3.00%)	Compound	MIL-T-46938					
	PETN (8.00%)	Compound	MIL-P-387	///2//				

USADACS - MIDAS DETAILED STRUCTURE FOR A MUNITION (LESS BULK ITEMS)

06/09/97

Nomenclature: CTG CAL .50 4 BALL M33/1 TR M17 LNKD M9

NSN: 1305000286583 DODIC: A557 Reported Weight: 0.3844 LB

DRAWING #	NOMENCLATURE	TYPE	SPECIFICATION	TGCS	-- REPORTED --- WEIGHT	UNIT	FACTOR	FACTORED WEIGHT(LB)
	AL PWDR (10.00%)	Compound	MIL-A-512	/1/A/1//				
5033181	DISC (PAPER SEALING)	Part	MIL-P-60169				1.0000	
5033180	ANVIL (CU ALLOY)	Part	MIL-C-50				1.0000	
7645339*1	PRIMER PERC #315 (ALT)	Component	MIL-P-46610				1.0000	
	PEP (PRIMER MIX K-75)	Part	COMMERCIAL		2.7000	GR	1.0000	
	PB STYPHNATE (39.00%)	Compound	MIL-L-16355					
	TETRACENE (3.00%)	Compound	MIL-T-46938					
	BA NITRATE (41.00%)	Compound	MIL-B-162					
	SB SULFIDE (19.00%)	Compound	MIL-A-159					
	NC (6.00%)	Compound	MIL-N-244					
7645339*1	CUP PRIMER (CU ALLOY)	Part	MIL-C-50	//260//CITRIC/	2.5000	GR	1.0000	
7645339*2	DISC (PAPER SEALING)	Part	MIL-P-60169	////LACQUER/	0.0410	GR	1.0000	
7645339*3	ANVIL (CU ALLOY)	Part	MIL-C-50	//260//SHELLAC/	1.0700	GR	1.0000	
4116-14	PKG FOR NSN 1305000286583	Component					1.0000	
4116/14	PALLET 40" X 48" (WOOD)	Part	MIL-P-15011	/1//1/1/	80.0000	LB	0.0001	0.00800000
7553296	CNTR MTL M2A1 (STEEL)	Part	ASTM-A109		5.5000	LB	0.0012	0.00660000
7553296	CNTR MTL M2A1 (STEEL) (ALT)	Part	ASTM-A568		5.5000	LB	0.0012	
9332394-1	FILLER SIDE (FIBERBOARD)	Part	PPP-F-320	/SF/175///	0.0750	LB	0.0012	0.00009000
9349397	PAD HONEYCOMB CELL (KRAFT PAPER) (ALT)	Part	COMMERCIAL				0.0060	
7553302	GASKET COVER (RUBBER)	Part	MIL-R-3065	//410/RS//			0.0060	
8794342	SEAL METALLIC (PB ALLOY)	Part	QQ-L-201	/1////	0.0039	LB	0.0060	0.00002340
8794342	SEAL METALLIC (PB ALLOY) (ALT)	Part	QQ-L-201	/2////	0.0039	LB	0.0060	
8794342	SEAL METALLIC (ZN) (ALT)	Part	COMMERCIAL		27.0000	GR	0.0060	
7140393	LINK CTG M9 (STEEL)	Part	ASTM-A684	//1050-65///	273.0000	GR	1.0000	0.03900100
12576456	PKG/MKG FOR WRBND BX M2A1	Component					1.0000	
7553347	BOX WRBD ASSY	Component	MIL-B-46506				0.0060	
7553347-4	BOX WRBD (WOOD WIREBOUND)	Part	MIL-B-46506		5.7500	LB	0.0004	
7553347-3	END BOX WRBD (WOOD)	Part	PPP-B-585		1.0000	LB	0.0008	
7553347-1	SEPARATOR (FIBERBOARD)	Part	MIL-F-50449				1.0000	
7553347-1	SEPARATOR (POLYETHYLENE FOAM) (ALT)	Part	PPP-C-1752	/1/A///			1.0000	
7553347-1	SEPARATOR (PLASTIC) (ALT)	Part	MIL-P-83668	/2////			1.0000	
7553347-2	FIILER ENDS (FIBERBOARD)	Part	MIL-F-50449				1.0000	
7553347-2	FILLER ENDS (POLYETHYLENE FOAM) (ALT)	Part	PPP-C-1752	/1/A///			1.0000	
7553347-2	FILLER ENDS (PLASTIC) (ALT)	Part	MIL-P-83668	/2////			1.0000	
								0.30470180

USADACS - MIDAS DETAILED STRUCTURE FOR A MUNITION (LESS BULK ITEMS)

Nomenclature: CTG CAL .50 BLK M1A1 LNKD
NSN: 1305010784879 DODIC: A598 Reported Weight: 940.0000 GR (0.1343 LB)

DRAWING #	NOMENCLATURE	TYPE	SPECIFICATION	TGCS	-- REPORTED --- WEIGHT	UNIT	FACTOR	FACTORED WEIGHT(LB)
9326760	CTG CAL .50 BLK M1A1 LNKD	Munition	MIL-C-48623		940.0000	GR	1.0000	
9326760	CTG CAL .50 BLANK M1A1	Component	MIL-C-48623		940.0000	GR	1.0000	
5502646	CASE (BRS)	Part	ASTM-B36	//260///	870.0000	GR	1.0000	0.12428800
	PROP HI SKOR 700X (PROP HI SKOR 700X)	Part	COMMERCIAL		44.6000	GR	1.0000	0.00637200
	NC (67.40%)	Compound	MIL-N-244					
	NITROGLYCERIN (30.00%)	Compound	MIL-N-246					
	GRAPHITE (0.50%)	Compound	MIL-G-155					
	K NITRATE (0.50%)	Compound	MIL-P-156					
	ETHYL CENTRALITE (1.50%)	Compound	MIL-E-255					
	ETHYL ALCOHOL (0.10%)	Compound						
	PROP WC440S (PROP WC440S) (ALT)	Part	12913945		44.6000	LB	1.0000	
	NC (N 13.10%) (75.69%)	Compound	MIL-N-244					
	NITROGLYCERIN (17.00%)	Compound	MIL-N-246					
	DINITROTOLUENE (1.00%)	Compound	MIL-D-204					
	DIPHENYLAMINE (1.13%)	Compound	MIL-D-98					
	K SALT (0.63%)	Compound	COMMERCIAL					
	GRAPHITE (0.55%)	Compound	MIL-G-155					
	DETERRENT (4.00%)	Compound						
7645339*4	PRIMER PERC #50M	Component	MIL-P-46610		18.5000	GR	1.0000	
10534280	CUP PRIMER (CU ALLOY)	Part	MIL-C-50	//260//CITRIC/	2.5000	GR	1.0000	0.00035700
8594096	ANVIL (CU ALLOY)	Part	MIL-C-50	//260//SHELLAC/	1.0700	GR	1.0000	0.00015300
8594098	DISC (PAPER SEALING)	Part	MIL-P-60169	////LACQUER/	0.0410	GR	1.0000	0.00000600
	PEP (PRIMER MIX #5061W)	Part	7259096		2.2500	GR	1.0000	0.00032100
	BA NITRATE (43.00%)	Compound	MIL-B-162	///1//				
	SB SULFIDE (9.00%)	Compound	MIL-A-159	///1,2 OR 3//				
	PB STYPHNATE (38.00%)	Compound	MIL-L-757					
	TETRACENE (2.00%)	Compound	MIL-T-46938					
	CA SILICIDE (8.00%)	Compound	MIL-C-324	///2//				
10534630	PRIMER PERC #35 (ALT)	Component	MIL-P-46610		18.5000	GR	1.0000	
5033179	CUP PRIMER (CU ALLOY)	Part	MIL-C-50		2.5000	GR	1.0000	
10534631	PELLET (PRIMER MIX FA-958)	Part	10521776		1.9000	GR	1.0000	
	SB SULFIDE (12.00%)	Compound	MIL-A-159	/1//1,2 OR 3//				
	BA NITRATE (39.00%)	Compound	MIL-B-162	///1//				
	PB STYPHNATE (28.00%)	Compound	MIL-L-757					
	TETRACENE (3.00%)	Compound	MIL-T-46938					
	PETN (8.00%)	Compound	MIL-P-387	///2//				
	AL PWDR (10.00%)	Compound	MIL-A-512	/1/A/1//				
5033181	DISC (PAPER SEALING)	Part	MIL-P-60169				1.0000	
5033180	ANVIL (CU ALLOY)	Part	MIL-C-50				1.0000	
7645339*3	PRIMER PERC #257 (ALT)	Component	MIL-P-46610		18.5000	GR	1.0000	
7645339*1	CUP PRIMER (CU ALLOY)	Part	MIL-C-50	//260//CITRIC/	2.5000	GR	1.0000	
7645339*2	DISC (PAPER SEALING)	Part	MIL-P-60169	////LACQUER/	0.0410	GR	1.0000	
7645339*3	ANVIL (CU ALLOY)	Part	MIL-C-50	//260//SHELLAC/	1.0700	GR	1.0000	
	PEP (PRIMER MIX #257)	Part	MIL-P-749		2.1000	GR	1.0000	
	PB STYPHNATE (36.00%)	Compound	MIL-L-757					
	TETRACENE (4.00%)	Compound	MIL-T-46938					
	PETN (5.00%)	Compound	MIL-P-387	///2//				
	BA NITRATE (33.00%)	Compound	MIL-B-162					
	SB SULFIDE (13.00%)	Compound	MIL-A-159	///A,B//				
	AL PWDR (7.00%)	Compound	MIL-A-512	/C//C//				
	SOLVENT (2.00%)	Compound						
7645339*1	PRIMER PERC #315 (ALT)	Component	MIL-P-46610				1.0000	

USADACS - MIDAS DETAILED STRUCTURE FOR A MUNITION (LESS BULK ITEMS)

06/09/97

Nomenclature: CTG CAL .50 BLK M1A1 LNKD

NSN: 1305010784879 DODIC: A598 Reported Weight: 940.0000 GR (0.1343 LB)

DRAWING #	NOMENCLATURE	TYPE	SPECIFICATION	TGCS	-- REPORTED --- WEIGHT	UNIT	FACTOR	FACTORED WEIGHT(LB)
	PEP (PRIMER MIX K-75)	Part	COMMERCIAL		2.7000	GR	1.0000	
	PB STYPHNATE (39.00%)	Compound	MIL-L-16355					
	TETRACENE (3.00%)	Compound	MIL-T-46938					
	BA NITRATE (41.00%)	Compound	MIL-B-162					
	SB SULFIDE (19.00%)	Compound	MIL-A-159					
	NC (6.00%)	Compound	MIL-N-244					
7645339*1	CUP PRIMER (CU ALLOY)	Part	MIL-C-50	//260//CITRIC/	2.5000	GR	1.0000	
7645339*2	DISC (PAPER SEALING)	Part	MIL-P-60169	////LACQUER/	0.0410	GR	1.0000	
7645339*3	ANVIL (CU ALLOY)	Part	MIL-C-50	//260//SHELLAC/	1.0700	GR	1.0000	
4116-14	PKG FOR NSN 1305010784879	Component					1.0000	
4116/14	PALLET 40" X 48" (WOOD)	Part	MIL-P-15011	/1//1/I,IA,IB/	80.0000	LB	0.0001	0.00800000
7553296	CNTR MTL M2A1 (STEEL)	Part	ASTM-A109		5.5000	LB	0.0100	0.05500000
7553296	CNTR MTL M2A1 (STEEL) (ALT)	Part	ASTM-A568		5.5000	LB	0.0100	
7553302	GASKET COVER (RUBBER)	Part	MIL-R-3065	//410/RS//			0.0100	
8794342	SEAL METALLIC (PB ALLOY)	Part	QQ-L-201	/1////	0.0039	LB	0.0050	0.00001950
8794342	SEAL METALLIC (PB ALLOY) (ALT)	Part	QQ-L-201	/2////	0.0039	LB	0.0050	
8794342	SEAL METALLIC (PRONG-LOK #4) (ALT)	Part	COMMERCIAL				0.0050	
7140393	LINK CTG M9 (STEEL)	Part	ASTM-A684	//1050-65///	273.0000	GR	1.0000	0.03900100
7553347	BOX WRBD ASSY	Component	MIL-B-46506				0.0050	
7553347-4	BOX WRBD (WOOD WIREBOUND)	Part	MIL-B-46506		5.7500	LB	0.0004	
7553347-3	END BOX WRBD (WOOD)	Part	PPP-B-585		1.0000	LB	0.0008	
7553347-1	SEPARATOR (FIBERBOARD)	Part	MIL-F-50449				1.0000	
7553347-1	SEPARATOR (POLYETHYLENE FOAM) (ALT)	Part	PPP-C-1752	/1/A///			1.0000	
7553347-1	SEPARATOR (PLASTIC) (ALT)	Part	MIL-P-83668	/2////			1.0000	
7553347-2	FIILER ENDS (FIBERBOARD)	Part	MIL-F-50449				1.0000	
7553347-2	FILLER ENDS (POLYETHYLENE FOAM) (ALT)	Part	PPP-C-1752	/1/A///			1.0000	
7553347-2	FILLER ENDS (PLASTIC) (ALT)	Part	MIL-P-83668	/2////			1.0000	
								0.23351750

DODAC	Type	Quantity	Search	Printout	Page(s)
B505	40 MM RED STAR PARA	11	Not Found	No	
B506	CTG. 40MM RED SMK M713	9	CD ROM	Yes	2
B508	CTG. 40MM GRN SMK M715	34	Internet	Yes	3
B509	CTG. 40MM YLW SMK M716	33	Internet	Yes	3
B519	CTG. 40MM TP M781	13669	Internet	Yes	4
B535	CTG. 40MM WHT STAR PARA M583A1	303	Internet	Yes	4
B627	CTG. 60MM ILLUM M83A3	242	Not Found	No	
B630	CTG. 60MM SMK WP M302		Internet	Yes	14
B632	CTG. 60MM HE M49A4	1626	CD ROM	Yes	6
B642	CTG. 60MM HE M720		Internet	Yes	22
B643	CTG. 60MM HE M888		Not Found	No	
C025	77MM BLNK	24	Not Found	No	
C226	CTG. 81MM ILLUM M301 W/FUZE TIME M84	106	CD ROM	Yes	5
C236	CTG. 81MM HE M374 W/O FUZE	352	CD ROM	Yes	2
C236	CTG. 81MM HE M374A2 W/O FUZE		CD ROM	Yes	3
C256	CTG. 81MM HE M374A2 W/O FUZE PD M567	2395	CD ROM	Yes	6
C276	CTG. 81MM SMOKE WP M375	15	Internet	Yes	17
C440	105MM BLK	672	Not Found	No	
C697	CTG. 4.2" M329A2	1163	Internet	Yes	5
C706	CTG. 4.2" ILLUM M335A1	22	Not Found	No	
C868	CTG. 81MM HE M821		Not Found	No	
C869	CTG. 81MM HE M899		Not Found	No	
D445	CANISTER 155MM SMK HC M1	34	Internet	Yes	1
D449	CANISTER 155MM SMK YLW M3	26	Internet	Yes	2
D451	CANISTER 155MM SMK GRN M4		Internet	Yes	2
D513	PROJ 155MM PRAC M804	1460	Internet	Yes	2
D540	CHG. PROP. 155MM GRN BAG M3A1	1137	CD ROM	Yes	4
Notes:					
DODAC	Department of Defense Activity Code				
Quantity	Quantity of ammunition expended by type in 1989				
Search	Search through the MIDAS database in CD ROM & Internet				
LIST OF ACRONYMS AND ABBREVIATIONS					
BLK	BLANK				
CHG	CHARGE				
CTG	CARTRIDGE				
GRN	GREEN				
HE	HIGH EXPLOSIVE				
ILLUM	ILLUMINATION				
PROJ	PROJECTILE				
PROP	PROPELLANT				
SMK	SMOKE				
WHT	WHITE				

WP	WHITE PHOSPH				
YLW	YELLOW				

USADACS - MIDAS DETAILED STRUCTURE FOR A MUNITION (LESS BULK ITEMS)

06/09/97

Nomenclature: CTG 40MM RED SMK M713

NSN: 1310005416150 DODIC: B506 Reported Weight: 0.4900 LB

DRAWING #	NOMENCLATURE	TYPE	SPECIFICATION	TGCS	-- REPORTED --- WEIGHT	UNIT	FACTOR	FACTORED WEIGHT(LB)
9323252	CTG 40MM RED SMK M713	Munition			0.4900	LB	1.0000	
MS28900-28	PACKING PREFORMED O-RING (RUBBER)	Part	COMMERCIAL				1.0000	
9323252	PROJ ASSY 40MM SMK RED	Component			169.0000	GM	1.0000	
9323260	TAPE DISC (AL FOIL)	Part	COMM (SCOTCH)	//434///			1.0000	
9323255	FUZE PYRO DELAY M733	Component					1.0000	
9258732	FUZE SPT (LEXAN)	Part	COMM	//3412-131///			1.0000	
9323259	PLUG (LEXAN)	Part	COMMERCIAL	//3412-131///			1.0000	
9323256	DELAY ASSY	Component					1.0000	
	FUZE OUTPUT COMP (FUZE OUTPUT COMP)	Part	9323271		175.0000	MG	1.0000	0.00038600
	BORON (18.70%)	Compound	MIL-B-51092					
	BA CHROMATE (37.40%)	Compound	MIL-B-550	//A///				
	AL PWDR (6.20%)	Compound	MIL-A-512	/1/B/2//				
	K NITRATE (33.70%)	Compound	MIL-P-156					
	VINYL ALCOHOL ACETAT (4.00%)	Compound	MIL-V-50433					
	FUZE DELAY COMP (FUZE DELAY COMP)	Part	9323270		1100.0000	MG	1.0000	0.00242600
	BA CHROMATE (29.00%)	Compound	MIL-B-550	//A///				
	BORON (11.70%)	Compound	MIL-B-51092					
	CR OXIDE (59.30%)	Compound	J5350					
	FUZE 1ST FIRE COMP (FUZE 1ST FIRE COMP)	Part	9323269		220.0000	MG	1.0000	0.00048500
	BA CHROMATE (81.00%)	Compound	MIL-B-550	//A///				
	BORON (18.00%)	Compound	MIL-B-51092					
	VINYL ALCOHOL ACETAT (1.00%)	Compound	MIL-V-50433					
9323282	HOUSING DELAY (AL ALLOY)	Part	ASTM B209	//5052-0///			1.0000	
9323254	PROJ SUBASSY	Component					1.0000	
9258733	FELT DISC (WOOL FELT)	Part	C-F-206	/1/12R3///			1.0000	
9258730	BASE (ZN ALLOY)	Part	ASTM-B86		39.5000	GM	1.0000	0.08709800
9323253	PROJ LOADED (RED SMK)	Component					1.0000	
9258731	PROJ BODY (AL ALLOY)	Part	ASTM B211	//6160-T6///	169.0000	GM	1.0000	0.37264500
	PYRO COMP RED SMK (COMP PYROTECHNIC RED SMK)	Part	9323272	////SUGAR/	74.1000	GM	1.0000	0.16339100
	NA BICARBONATE (5.40%)	Compound	O-S-576					
	NC (7.54%)	Compound	MIL-N-244	//D///				
	SUGAR (16.40%)	Compound	JJJ-S-00791	/1//D//				
	K CHLORATE (26.30%)	Compound	MIL-P-150	//B/3//				
	CELLOFILM 4430 (0.66%)	Compound	COMMERCIAL					
	DYE DISPERSE RED (43.70%)	Compound	MIL-D-3284					
	PYRO COMP RED SMK (COMP PYROTECHNIC RED SMK) (ALT)	Part	9323272	////SULFUR/	74.1000	GM	1.0000	
	NA BICARBONATE (16.40%)	Compound	O-S-576					
	K CHLORATE (25.60%)	Compound	MIL-P-150	//B/3//				
	CELLOFILM 4430 (0.66%)	Compound	COMMERCIAL					
	NC (7.54%)	Compound	MIL-N-244	//D///				
	DYE DISPERSE RED (40.60%)	Compound	MIL-D-3284					
	S (9.20%)	Compound	JAN-S-478	//E///				
	COMP IGN SMK (COMP IGN SMK)	Part	9323280		1.0000	GM	1.0000	0.00220500
	B (19.00%)	Compound	MIL-B-51092					
	BA CHROMATE (58.00%)	Compound	MIL-B-550	//A///				
	K NITRATE (19.00%)	Compound	MIL-P-156					
	VINYL ALCOHOL RESIN (4.00%)	Compound	MIL-V-50433					
8844609	CTG CASE LOADING ASSY M118	Component					1.0000	
8844610	CTG CASE (AL ALLOY)	Part	QQ-A-200/10	//6066-T6///			1.0000	
8844612	POWDER CHG CUP (BRS)	Part	ASTM-B36				1.0000	
8844611	BASE PLUG (AL ALLOY)	Part	QQ-A-200/3	/1////			1.0000	
8844611	BASE PLUG (AL ALLOY) (ALT)	Part	ASTM-B211	//2024-T4///			1.0000	

USADACS - MIDAS DETAILED STRUCTURE FOR A MUNITION (LESS BULK ITEMS)

Nomenclature: CTG 40MM RED SMK M713
NSN: 1310005416150 DODIC: B506 Reported Weight: 0.4900 LB

DRAWING #	NOMENCLATURE	TYPE	SPECIFICATION	TGCS	-- REPORTED --- WEIGHT	UNIT	FACTOR	FACTORED WEIGHT(LB)
	PROP M9 (PROP M9 FLAKE*)	Part	MIL-P-50206		320.0000	MG	1.0000	0.00070600
	NC (57.52%)	Compound	MIL-N-244	/2/C///				
	NITROGLYCERIN (39.84%)	Compound	MIL-N-246	/1////				
	ETHYL CENTRALITE (0.75%)	Compound	MIL-E-255	///2,3//				
	K NITRATE (1.49%)	Compound	MIL-P-156	///2,3,4//				
	GRAPHITE, GLAZE, MAX (0.40%)	Compound						
9235729	PRIMER PERC ASSY #100	Component	COMM FEDERAL #				1.0000	
8799925	PRIMER PERC ASSY M42 (ALT)	Component	MIL-P-20444		5.0000	GR	1.0000	
8837991	CUP (AL ALLOY)	Part	QQ-A-250	//1100///	3.5000	GR	1.0000	
8837993	COVER (PAPER SEALING)	Part	MIL-P-60169	/1////			1.0000	
8837992	ANVIL (BRS)	Part	ASTM-B19	//260///	1.0700	GR	1.0000	
	PEP (PRIMER MIX PA-101)	Part	8799925		0.3300	GR	1.0000	
	PB STYPHNATE (53.00%)	Compound	MIL-L-16355					
	SB SULFIDE (10.00%)	Compound	MIL-A-159	///5//				
	BA NITRATE (22.00%)	Compound	MIL-B-162	///1//				
	AL PWDR (10.00%)	Compound	MIL-P-14067	/2////				
	TETRACENE (5.00%)	Compound	MIL-T-46938					
	PEP (PRIMER MIX #793) (ALT)	Part	COMMERCIAL		0.3300	GR	1.0000	
	TNT (3.00%)	Compound	MIL-T-248					
	SB SULFIDE (30.00%)	Compound	MIL-A-159					
	CA SILICIDE (15.00%)	Compound	MIL-C-324					
	K CHLORATE (35.00%)	Compound	MIL-P-150					
	PB THIOCYANATE (17.00%)	Compound	MIL-L-65					
	PEP (PRIMER MIX #5086) (ALT)	Part	COMMERCIAL		0.3300	GR	1.0000	
	SB SULFIDE (20.00%)	Compound	MIL-A-159					
	TETRACENE (2.00%)	Compound	MIL-T-46938					
	PB STYPHNATE (26.00%)	Compound	MIL-L-757					
	CA SILICIDE (10.50%)	Compound	MIL-C-324					
	BA NITRATE (41.50%)	Compound	MIL-B-162					
								0.62934200

MIDAS: Detailed Structure B508

Nomenclature: CTG 40MM GRN SMK M715
NSN: 1310005416452
DODIC: B508
Drawing #: 9323261
Family: CS
Reported weight: 0.4900 LB
Specification: MIL-C-63130
Remarks:

#	Type	Drawing#	Nomenclature	Weight
1	Munition	9323261	CTG 40MM GRN SMK M715	0.49 LB
2	Part	MS28900-28	--O-RING (RUBBER)	0.00
3	Component	9323262	--PROJ ASSY 40MM SMK GRN	169.00 GM
4	Part	9323260	----DISC TAPE (AL FOIL)	0.00
5	Component	9323255	----FUZE PYRO DELAY M733	0.00
6	Part	9258732	------FUZE SPT (LEXAN)	0.00
7	Part	9323259	------PLUG (LEXAN)	0.00
8	Component	9323256	------DELAY ASSY	0.00
9	Part		FUZE OUTPUT COMP (FUZE OUTPUT COMP)	175.00 MG
10	Compound		----------BORON (18.70%)	
11	Compound		----------BA CHROMATE (37.40%)	
12	Compound		----------AL PWDR (6.20%)	
13	Compound		----------K NITRATE (33.70%)	
14	Compound		----------VINYL ALCOHOL (4.00%)	
15	Part		FUZE DELAY COMP (FUZE DELAY COMP)	1100.00 MG
16	Compound		----------BA CHROMATE (29.00%)	
17	Compound		----------BORON (11.70%)	
18	Compound		----------CR OXIDE (59.30%)	
19	Part		FUZE 1ST FIRE COMP (FUZE 1ST FIRE COMP)	220.00 MG
20	Compound		----------BA CHROMATE (81.00%)	
21	Compound		----------BORON (18.00%)	
22	Compound		----------VINYL ALCOHOL (1.00%)	
23	Part	9323282	--------HOUSING DELAY (AL ALLOY)	0.00
24	Component	9323264	----PROJ SUB ASSY	0.00
25	Part	9258730	------BASE (ZN ALLOY)	39.50 GM
26	Bulk item		--------ZN PHOSPHATE	
27	Part	9258733	------FELT DISC (WOOL FELT)	0.00
28	Component	9323263	------PROJ LOADED GRN SMK	0.00
29	Part	9258731	--------BODY (AL ALLOY)	93.11 GM
30	Bulk item		----------CHROMATE COATING	
31	Bulk item		----------ENAMEL	
32	Bulk item		----------ENAMEL (ALT)	
33	Bulk item		----------STENCIL INK BLK	

34	Bulk item		----------STENCIL INK GRN (ALT)	
35	Part		COMP PYRO GRN SMK (COMP PYRO GRN SMK)	74.10 GM
36	Compound		----------NA BICARBONATE (13.30%)	
37	Compound		----------S (10.20%)	
38	Compound		----------K CHLORATE (26.00%)	
39	Compound		----------NC SOLUTION (9.80%)	
40	Compound		----------DYE SOLVENT GRN 3* (35.60%)	
41	Compound		----------DYE YLW SMK 6 (5.10%)	
42	Part		--------COMP IGN SMK (COMP IGN SMK)	1.00 GM
43	Compound		----------B AMORPHOUS PWDR (19.00%)	
44	Compound		----------BA CHROMATE (58.00%)	
45	Compound		----------K NITRATE (19.00%)	
46	Compound		----------VINYL ALCOHOL (4.00%)	
47	Component	8844609	--CTG CASE LOADING ASSY M118	0.00
48	Part	8844610	----CASE CTG 40MM M118 (AL ALLOY)	2.75 OZ
49	Bulk item		------ANODIC COATING	
50	Bulk item		------STENCIL INK	
51	Bulk item		------ADHESIVE (9260269)	
52	Bulk item		------VARNISH	
53	Part	8844610	----CASE CTG 40MM M118 (AL ALLOY) (ALT)	2.75 OZ
54	Bulk item		------ANODIC COATING	
55	Bulk item		------STENCIL INK	
56	Bulk item		------ADHESIVE (9260269)	
57	Bulk item		------VARNISH	
58	Part	8844612	----PWDR CHG CUP (BRASS)	4.72 GR
59	Part		----PROP M9 (PROP M9 FLAKE*)	330.00 MG
60	Compound		------NC (57.52%)	
61	Compound		------NITROGLYCERIN (39.84%)	
62	Compound		------ETHYL CENTRALITE (0.75%)	
63	Compound		------K NITRATE (1.49%)	
64	Compound		------GRAPHITE (0.40%)	
65	Part	8844611	----PLUG BASE (AL ALLOY)	38.00 GR
66	Bulk item		------ANODIC COATING	
67	Bulk item		------ANODIC COATING (ALT)	
68	Bulk item		------VARNISH	
69	Bulk item		------LUBRICANT (PLAST-O-LON)	
70	Part	8844611	----PLUG BASE (AL ALLOY) (ALT)	38.00 GR
71	Bulk item		------ANODIC COATING	
72	Bulk item		------ANODIC COATING (ALT)	
73	Bulk item		------VARNISH	
74	Bulk item		------LUBRICANT (PLAST-O-LON)	
75	Component	9235729	----PRIMER PERC ASSY #100	0.00
76	Component	8799925	----PRIMER PERC ASSY M42 (ALT)	5.00 GR
77	Part	8837991	------CUP (AL ALLOY)	3.50 GR

78	Bulk item		--------VARNISH	
79	Part	8837991	------CUP (CU ALLOY) (ALT)	3.50 GR
80	Bulk item		--------VARNISH	
81	Part	8837993	------COVER (PAPER SEALING)	0.00
82	Part	8837992	------ANVIL (BRASS)	1.07 GR
83	Part	8837992	------ANVIL (CU ALLOY) (ALT)	1.07 GR
84	Part		------PEP (PRIMER MIX PA-101)	0.33 GR
85	Compound		--------PB STYPHNATE (53.00%)	
86	Compound		--------SB SULFIDE (10.00%)	
87	Compound		--------BA NITRATE (22.00%)	
88	Compound		--------AL PWDR (10.00%)	
89	Compound		--------TETRACENE (5.00%)	
90	Part		------PEP (PRIMER MIX #793) (ALT)	0.33 GR
91	Compound		--------TNT (3.00%)	
92	Compound		--------SB SULFIDE (30.00%)	
93	Compound		--------CA SILICIDE (15.00%)	
94	Compound		--------K CHLORATE (35.00%)	
95	Compound		--------PB THIOCYANATE (17.00%)	
96	Part		------PEP (PRIMER MIX #5086) (ALT)	0.33 GR
97	Compound		--------SB SULFIDE (20.00%)	
98	Compound		--------TETRACENE (2.00%)	
99	Compound		--------PB STYPHNATE (26.00%)	
100	Compound		--------CA SILICIDE (10.50%)	
101	Compound		--------BA NITRATE (41.50%)	

MIDAS: Detailed Structure B509

Nomenclature: CTG 40MM YLW SMK M716
NSN: 1310005416153
DODIC: B509
Drawing #: 9323265
Family: CS
Reported weight: 0.4900 LB
Specification: MIL-C-63131
Remarks:

#	Type	Drawing#	Nomenclature	Weight
1	Munition	9323265	CTG 40MM YLW SMK M716	0.49 LB
2	Part	MS28900-28	--O-RING (RUBBER)	0.00
3	Component	9323266	--PROJ 40MM YLW SMK ASSY	169.00 GM
4	Part	9323260	---TAPE DISC (AL FOIL)	0.00
5	Component	9323255	---FUZE PYRO DELAY M733	0.00
6	Part	9258732	----FUZE SPT (LEXAN)	0.00
7	Part	9323259	----PLUG (LEXAN)	0.00
8	Component	9323256	----DELAY ASSY	0.00
9	Part		FUZE OUTPUT COMP (FUZE OUTPUT COMP)	175.00 MG
10	Compound		-------BORON (18.70%)	
11	Compound		-------BA CHROMATE (37.40%)	
12	Compound		-------AL PWDR (6.20%)	
13	Compound		-------K NITRATE (33.70%)	
14	Compound		-------VINYL ALCOHOL (4.00%)	
15	Part		FUZE DELAY COMP (FUZE DELAY COMP)	1100.0 MG
16	Compound		-------BA CHROMATE (29.00%)	
17	Compound		-------BORON (11.70%)	
18	Compound		-------CR OXIDE (59.30%)	
19	Part		FUZE 1ST FIRE COMP (FUZE 1ST FIRE COMP)	220.00 MG
20	Compound		-------BA CHROMATE (81.00%)	
21	Compound		-------BORON (18.00%)	
22	Compound		-------VINYL ALCOHOL (1.00%)	
23	Part	9323282	-----HOUSING DELAY (AL ALLOY)	0.00
24	Component	9323268	---PROJ SUB ASSY	0.00
25	Part	9258733	----FELT DISC (WOOL FELT)	0.00
26	Part	9258730	----BASE (ZN ALLOY)	39.50 GM
27	Bulk item		-----ZN PHOSPHATE	
28	Component	9323267	----PROJ LOADED YLW SMK	0.00
29	Part	9258731	-----BODY (AL ALLOY)	93.11 GM
30	Bulk item		-------CHROMATE COATING	
31	Bulk item		-------STENCIL INK	
32	Bulk item		-------ENAMEL	
33	Bulk item		-------ENAMEL (ALT)	
34	Part		SMK MIX YLW COMP (SMK MIX YLW COMP)	
35	Compound		-------NA BICARBONATE (13.40%)	

36	Compound		————S (10.20%)	
37	Compound		————NC SOLUTION (9.80%)	
38	Compound		————DYE YLW 4 (40.60%)	
39	Compound		————K CHLORATE (26.00%)	
40	Part		———COMP IGN SMK (COMP IGN SMK)	1.00 GM
41	Compound		————B AMORPHOUS PWDR (19.00%)	
42	Compound		————BA CHROMATE (58.00%)	
43	Compound		————K NITRATE (19.00%)	
44	Compound		————VINYL ALCOHOL (4.00%)	
45	Component	8844609	–CTG CASE LOADING ASSY M118	0.00
46	Part	8844610	—CASE CTG 40MM M118 (AL ALLOY)	2.75 OZ
47	Bulk item		——ANODIC COATING	
48	Bulk item		——STENCIL INK	
49	Bulk item		——ADHESIVE (9260269)	
50	Bulk item		——VARNISH	
51	Part	8844610	—CASE CTG 40MM M118 (AL ALLOY) (ALT)	2.75 OZ
52	Bulk item		——ANODIC COATING	
53	Bulk item		——STENCIL INK	
54	Bulk item		——ADHESIVE (9260269)	
55	Bulk item		——VARNISH	
56	Part	8844612	—PWDR CHG CUP (BRASS)	4.72 GR
57	Part		—PROP M9 (PROP M9 FLAKE*)	330.00 MG
58	Compound		——NC (57.52%)	
59	Compound		——NITROGLYCERIN (39.84%)	
60	Compound		——ETHYL CENTRALITE (0.75%)	
61	Compound		——K NITRATE (1.49%)	
62	Compound		——GRAPHITE (0.40%)	
63	Part	8844611	—PLUG BASE (AL ALLOY)	38.00 GR
64	Bulk item		——ANODIC COATING	
65	Bulk item		——ANODIC COATING (ALT)	
66	Bulk item		——VARNISH	
67	Bulk item		——LUBRICANT (PLAST-O-LON)	
68	Part	8844611	—PLUG BASE (AL ALLOY) (ALT)	38.00 GR
69	Bulk item		——ANODIC COATING	
70	Bulk item		——ANODIC COATING (ALT)	
71	Bulk item		——VARNISH	
72	Bulk item		——LUBRICANT (PLAST-O-LON)	
73	Component	9235729	—PRIMER PERC ASSY #100	0.00
74	Component	8799925	—PRIMER PERC ASSY M42 (ALT)	5.00 GR
75	Part	8837991	——CUP (AL ALLOY)	3.50 GR
76	Bulk item		———VARNISH	
77	Part	8837991	——CUP (CU ALLOY) (ALT)	3.50 GR
78	Bulk item		———VARNISH	
79	Part	8837993	——COVER (PAPER SEALING)	0.00
80	Part	8837992	——ANVIL (BRASS)	1.07 GR
81	Part	8837992	——ANVIL (CU ALLOY) (ALT)	1.07 GR
82	Part		——PEP (PRIMER MIX PA-101)	0.33 GR
83	Compound		———PB STYPHNATE (53.00%)	

84	Compound		———SB SULFIDE (10.00%)	
85	Compound		———BA NITRATE (22.00%)	
86	Compound		———AL PWDR (10.00%)	
87	Compound		———TETRACENE (5.00%)	
88	Part		——PEP (PRIMER MIX #793) (ALT)	0.33 GR
89	Compound		———TNT (3.00%)	
90	Compound		———SB SULFIDE (30.00%)	
91	Compound		———CA SILICIDE (15.00%)	
92	Compound		———K CHLORATE (35.00%)	
93	Compound		———PB THIOCYANATE (17.00%)	
94	Part		——PEP (PRIMER MIX #5086) (ALT)	0.33 GR
95	Compound		———SB SULFIDE (20.00%)	
96	Compound		———TETRACENE (2.00%)	
97	Compound		———PB STYPHNATE (26.00%)	
98	Compound		———CA SILICIDE (10.50%)	
99	Compound		———BA NITRATE (41.50%)	

MIDAS: Detailed Structure B519

Nomenclature: CTG 40MM TP M781
NSN: 1310010507967
DODIC: B519
Drawing #: 9322240
Family: CD
Reported weight: 205.0000 GM
Specification: MIL-C-63239
Remarks:

#	Type	Drawing#	Nomenclature	Weight
1	Munition	9322240	CTG 40MM TP M781	205.00 GM
2	Component	9310345	--PROJ ASSY 40MM PRAC	170.00 GM
3	Part	9322245	DYE SIGNAL (DYE SIG HI-VIZ 93%)	5.40 GM
4	Compound		------CI DISPERSE YLW 11 (2.53%)	
5	Compound		------SILICA (7.00%)	
6	Compound		------BASONYL RED 481 (0.70%)	
7	Compound		------ISOBENZOFURANDIONE (0.09%)	
8	Compound		-----FORMALDEHYDE/MELAMIN (89.48%)	
9	Compound		------TETRACHLOROZINCATE (0.20%)	
10	Part	9322245	DYE SIGNAL (DYE SIG DAY-GLO 93%) (ALT)	0.00
11	Compound		-----FORMALDEHYDE/MELAMIN (84.63%)	
12	Compound		------CI BASIC RED 1 (2.79%)	
13	Compound		------TETRACHLOROZINCATE (2.79%)	
14	Compound		------YLW COUMARIN DYE (2.79%)	
15	Compound		------SILICA (7.00%)	
16	Part	9322236	----WINDSHEILD (PLASTIC)	0.12 GM
17	Bulk item		------ADHESIVE (9322242)	
18	Bulk item		------LOCTITE (9340431) (ALT)	
19	Bulk item		------STENCIL INK WHT	
20	Part	9310344	----BODY (ZN ALLOY)	155.00 GM
21	Bulk item		------CHROMATE COATING	
22	Bulk item		------ADHESIVE (9322242)	
23	Bulk item		------LOCTITE (9340431) (ALT)	
24	Bulk item		------ADHESIVE RUBBER (9322244)	
25	Component	9381594	--PROJ ASSY 40MM PRAC (ALT)	170.00 GM
26	Part	9322245	----DYE SIGNAL (DYE SIG HI-VIZ 93%)	5.40 GM
27	Compound		------CI DISPERSE YLW 11 (2.53%)	
28	Compound		------SILICA (7.00%)	
29	Compound		------BASONYL RED 481 (0.70%)	
30	Compound		------ISOBENZOFURANDIONE (0.09%)	
31	Compound		------FORMALDEHYDE/MELAMIN (89.48%)	
32	Compound		------TETRACHLOROZINCATE (0.20%)	
33	Part	9322245	DYE SIGNAL (DYE SIG DAY-GLO 93%) (ALT)	0.00

34	Compound		------FORMALDEHYDE/MELAMIN (84.63%)	
35	Compound		------CI BASIC RED 1 (2.79%)	
36	Compound		------TETRACHLOROZINCATE (2.79%)	
37	Compound		------YLW COUMARIN DYE (2.79%)	
38	Compound		------SILICA (7.00%)	
39	Part	9381598	----WINDSHEILD (PLASTIC)	10.12 GM
40	Bulk item		------ADHESIVE (9322242)	
41	Bulk item		------LOCTITE (9340431) (ALT)	
42	Bulk item		------STENCIL INK WHT	
43	Component	9381595	----BODY ASSY 40MM	153.00 GM
44	Part	9381596	------BODY (ZN ALLOY)	145.00 GM
45	Bulk item		--------CHROMATE COATING	
46	Bulk item		--------ADHESIVE (9322242)	
47	Bulk item		--------LOCTITE (9340431) (ALT)	
48	Bulk item		--------ADHESIVE RUBBER (9322244)	
49	Part	9381597	------INSERT (STEEL)	0.00
50	Bulk item		--------ZN CHROMATE	
51	Part	9381597	------INSERT (ZN ALLOY) (ALT)	0.00
52	Component	9349805	--PROJ ASSY 40MM PRAC (ALT)	170.00 GM
53	Part	9322245	----DYE SIGNAL (DYE SIG HI-VIZ 93%)	5.40 GM
54	Compound		------CI DISPERSE YLW 11 (2.53%)	
55	Compound		------SILICA (7.00%)	
56	Compound		------BASONYL RED 481 (0.70%)	
57	Compound		------ISOBENZOFURANDIONE (0.09%)	
58	Compound		------FORMALDEHYDE/MELAMIN (89.48%)	
59	Compound		------TETRACHLOROZINCATE (0.20%)	
60	Part	9322245	DYE SIGNAL (DYE SIG DAY-GLO 93%) (ALT)	0.00
61	Compound		------FORMALDEHYDE/MELAMIN (84.63%)	
62	Compound		------CI BASIC RED 1 (2.79%)	
63	Compound		------TETRACHLOROZINCATE (2.79%)	
64	Compound		------YLW COUMARIN DYE (2.79%)	
65	Compound		------SILICA (7.00%)	
66	Part	9322236	----WINDSHEILD (PLASTIC)	10.12 GM
67	Bulk item		------ADHESIVE (9322242)	
68	Bulk item		------LOCTITE (9340431) (ALT)	
69	Bulk item		------STENCIL INK WHT	
70	Part	9322231	----SPRING LEAF (STEEL)	0.00
71	Component	9362631	----BODY ASSY 40MM	153.00 GM
72	Part	9362632	------BODY (AL ALLOY)	120.00 GM
73	Bulk item		--------CHROMATE COATING	
74	Bulk item		--------ADHESIVE (9322242)	
75	Bulk item		--------LOCTITE (9340431) (ALT)	
76	Bulk item		--------ADHESIVE RUBBER (9322244)	
77	Part	9362633	------INSERT (STEEL)	

78	Component	9354248	--PROJ ASSY 40MM PRAC (ALT)	
79	Part	9322245	----DYE SIGNAL (DYE SIG HI-VIZ 93%)	5.40 GM
80	Compound		------CI DISPERSE YLW 11 (2.53%)	
81	Compound		------SILICA (7.00%)	
82	Compound		------BASONYL RED 481 (0.70%)	
83	Compound		------ISOBENZOFURANDIONE (0.09%)	
84	Compound		------FORMALDEHYDE/MELAMIN (89.48%)	
85	Compound		------TETRACHLOROZINCATE (0.20%)	
86	Part	9322245	DYE SIGNAL (DYE SIG DAY-GLO 93%) (ALT)	0.00
87	Compound		------FORMALDEHYDE/MELAMIN (84.63%)	
88	Compound		------CI BASIC RED 1 (2.79%)	
89	Compound		------TETRACHLOROZINCATE (2.79%)	
90	Compound		------YLW COUMARIN DYE (2.79%)	
91	Compound		------SILICA (7.00%)	
92	Part	9322236	----WINDSHEILD (PLASTIC)	10.12 GM
93	Bulk item		------STENCIL INK WHT	
94	Bulk item		------METHYL ETHYL KETONE	
95	Part	9322231	----SPRING LEAF (STEEL)	0.00
96	Component	9354247	----BODY & BAND ASSY 40MM	0.00
97	Part	9352746	------BODY (ZN ALLOY)	142.00 GM
98	Bulk item		--------ADHESIVE RUBBER (9322244)	
99	Bulk item		--------LOCTITE (9370176)	
100	Part	9352745	------BAND ROTATING 40MM (PLASTIC)	0.00
101	Bulk item		--------LOCTITE (9370176)	
102	Bulk item		--------METHYL ETHYL KETONE	
103	Component	9322239	--CTG CASE LD ASSY M212	0.00
104	Part	9322230	----CTG CASE M212 PRAC (NYLON)	17.00 GM
105	Bulk item		------ADHESIVE RUBBER (9322244)	
106	Bulk item		------LACQUER CELL NITRATE	
107	Bulk item		------STENCIL INK WHT	
108	Component	9322238	----.38 CAL CASE ASSY	0.00
109	Part		------PROP M9 (PROP M9 FLAKE*)	340.00 MG
110	Compound		--------ETHYL CENTRALITE (0.75%)	
111	Compound		--------GRAPHITE (0.40%)	
112	Compound		--------K NITRATE (1.49%)	
113	Compound		--------NC (57.52%)	
114	Compound		--------NITROGLYCERIN (39.84%)	
115	Part	9322241	------.38 CAL CASE (CU ALLOY)	0.00
116	Bulk item		--------NI PLATING (ALT)	
117	Bulk item		--------LACQUER CELL NITRATE	
118	Bulk item		--------LOCTITE (9370176)	
119	Part	9322234	------FILLER PLUG (POLYSTYRENE FOAM)	0.00
120	Part	9322235	------WAD CTG (CHIPBOARD)	0.00
121	Component	8799925	------PRIMER PERC ASSY M42	5.00 GR

122	Part	8837991	--------CUP (AL ALLOY)	3.50 GR
123	Bulk item		----------VARNISH	
124	Part	8837991	--------CUP (CU ALLOY) (ALT)	3.50 GR
125	Bulk item		----------VARNISH	
126	Part	8837993	--------COVER (PAPER SEALING)	0.00
127	Part	8837992	--------ANVIL (BRASS)	1.07 GR
128	Part	8837992	--------ANVIL (CU ALLOY) (ALT)	1.07 GR
129	Part		--------PEP (PRIMER MIX PA-101)	0.33 GR
130	Compound		----------PB STYPHNATE (53.00%)	
131	Compound		----------SB SULFIDE (10.00%)	
132	Compound		----------BA NITRATE (22.00%)	
133	Compound		----------AL PWDR (10.00%)	
134	Compound		----------TETRACENE (5.00%)	
135	Part		--------PEP (PRIMER MIX #793) (ALT)	0.33 GR
136	Compound		----------TNT (3.00%)	
137	Compound		----------SB SULFIDE (30.00%)	
138	Compound		----------CA SILICIDE (15.00%)	
139	Compound		----------K CHLORATE (35.00%)	
140	Compound		----------PB THIOCYANATE (17.00%)	
141	Part		--------PEP (PRIMER MIX #5086) (ALT)	0.33 GR
142	Compound		----------SB SULFIDE (20.00%)	
143	Compound		----------TETRACENE (2.00%)	
144	Compound		----------PB STYPHNATE (26.00%)	
145	Compound		----------CA SILICIDE (10.50%)	
146	Compound		----------BA NITRATE (41.50%)	
147	Component	9345327	------PRIMER PERC ASSY M42C1 (ALT)	0.00
148	Part		--------PEP (PRIMER MIX PA-101)	0.34 GR
149	Compound		----------AL PWDR (10.00%)	
150	Compound		----------BA NITRATE (22.00%)	
151	Compound		----------PB STYPHNATE (53.00%)	
152	Compound		----------SB SULFIDE (10.00%)	
153	Compound		----------TETRACENE (5.00%)	
154	Part	9345327*1	--------PRIMER CUP (CU ALLOY)	0.00
155	Bulk item		----------LACQUER RED	
156	Bulk item		----------LACQUER CELL NITRATE	
157	Part	9345327*3	--------ANVIL (BRASS)	0.00
158	Part	9345327*2	--------PRIMER FOIL (PAPER)	0.00

MIDAS: Detailed Structure B535

Nomenclature: CTG 40MM WHT STAR PARA M583A1
NSN: 1310001593198
DODIC: B535
Drawing #: 9243881
Family: FP
Reported weight: 0.4390 LB
Specification: MIL-C-50510
Remarks:

#	Type	Drawing#	Nomenclature	Weight
1	Munition	9243881	CTG 40MM WHT STAR PARA M583A1	0.44 LB
2	Part	MS28900-28	--O-RING (RUBBER)	0.00
3	Component	9207988	--CTG CASE LOADING ASSY M195	0.00
4	Part	8844612	----PWDR CHG CUP (BRASS)	4.72 GR
5	Part		----PROP M9 (PROP M9 FLAKE*)	360.00 MG
6	Compound		------ETHYL CENTRALITE (0.75%)	
7	Compound		------GRAPHITE (0.40%)	
8	Compound		------K NITRATE (1.49%)	
9	Compound		------NC (57.52%)	
10	Compound		------NITROGLYCERIN (39.84%)	
11	Part	9207989	----CASE CTG 40MM M195 (AL ALLOY)	19.18 GM
12	Bulk item		------ANODIC COATING	
13	Bulk item		------STENCIL INK	
14	Bulk item		------VARNISH	
15	Part	9207989	----CASE CTG 40MM M195 (AL ALLOY) (ALT)	19.18 GM
16	Bulk item		------ANODIC COATING	
17	Bulk item		------STENCIL INK	
18	Bulk item		------VARNISH	
19	Part	8844610	----CASE CTG 40MM M118 (AL ALLOY) (ALT)	2.75 OZ
20	Bulk item		------ANODIC COATING	
21	Bulk item		------STENCIL INK	
22	Bulk item		------ADHESIVE (9260269)	
23	Bulk item		------VARNISH	
24	Part	8844610	----CASE CTG 40MM M118 (AL ALLOY) (ALT)	2.75 OZ
25	Bulk item		------ANODIC COATING	
26	Bulk item		------STENCIL INK	
27	Bulk item		------ADHESIVE (9260269)	
28	Bulk item		------VARNISH	
29	Part	8844611	----PLUG BASE (AL ALLOY)	38.00 GR
30	Bulk item		------ANODIC COATING	
31	Bulk item		------ANODIC COATING (ALT)	
32	Bulk item		------VARNISH	
33	Bulk item		------LUBRICANT (PLAST-O-LON)	

34	Part	8844611	----PLUG BASE (AL ALLOY) (ALT)	38.00 GR
35	Bulk item		------ANODIC COATING	
36	Bulk item		------ANODIC COATING (ALT)	
37	Bulk item		------VARNISH	
38	Bulk item		------LUBRICANT (PLAST-O-LON)	
39	Component	9235729	----PRIMER PERC ASSY #100	0.00
40	Component	8799925	----PRIMER PERC ASSY M42 (ALT)	5.00 GR
41	Part	8837991	------CUP (AL ALLOY)	3.50 GR
42	Bulk item		--------VARNISH	
43	Part	8837991	------CUP (CU ALLOY) (ALT)	3.50 GR
44	Bulk item		--------VARNISH	
45	Part	8837993	------COVER (PAPER SEALING)	0.00
46	Part	8837992	------ANVIL (BRASS)	1.07 GR
47	Part	8837992	------ANVIL (CU ALLOY) (ALT)	1.07 GR
48	Part		------PEP (PRIMER MIX PA-101)	0.33 GR
49	Compound		--------PB STYPHNATE (53.00%)	
50	Compound		--------SB SULFIDE (10.00%)	
51	Compound		--------BA NITRATE (22.00%)	
52	Compound		--------AL PWDR (10.00%)	
53	Compound		--------TETRACENE (5.00%)	
54	Part		------PEP (PRIMER MIX #793) (ALT)	0.33 GR
55	Compound		--------TNT (3.00%)	
56	Compound		--------SB SULFIDE (30.00%)	
57	Compound		--------CA SILICIDE (15.00%)	
58	Compound		--------K CHLORATE (35.00%)	
59	Compound		--------PB THIOCYANATE (17.00%)	
60	Part		------PEP (PRIMER MIX #5086) (ALT)	0.33 GR
61	Compound		--------SB SULFIDE (20.00%)	
62	Compound		--------TETRACENE (2.00%)	
63	Compound		--------PB STYPHNATE (26.00%)	
64	Compound		--------CA SILICIDE (10.50%)	
65	Compound		--------BA NITRATE (41.50%)	
66	Component	9243909	--PROJ ASSY M583A1	0.00
67	Part	9243882	----OGIVE (POLYCARBONATE RESIN)	86.02 GR
68	Part	9243892	----SPACER (RUBBER)	16.73 GR
69	Part	9243894	----O-RING (NITRILE)	1.27 GR
70	Bulk item		------SILICONE COMPOUND	
71	Part	9243900	----BODY (AL ALLOY)	85.73 GM
72	Bulk item		------CHROMATE COATING	
73	Bulk item		------ENAMEL WHT	
74	Bulk item		------ENAMEL WHT (ALT)	
75	Part	MS171434	----PIN SPRING (STAINLESS STEEL)	0.00
76	Bulk item		------PASSIVATE TREATMENT	
77	Component	9243885	----DELAY ASSY	0.00

78	Part		------PEP (DELAY COMP)	740.00 MG
79	Compound		--------BA CHROMATE (33.00%)	
80	Compound		--------K PERCHLORATE (33.00%)	
81	Compound		--------W (33.00%)	
82	Compound		--------VINYL ALCOHOL ACETAT (1.00%)	
83	Part		------PEP (IGN COMP MIX)	280.00 MG
84	Compound		--------B AMORPHOUS PWDR (25.00%)	
85	Compound		--------K PERCHLORATE (75.00%)	
86	Part		------PEP (BLACK PWDR CL 7) (ALT)	280.00 MG
87	Compound		--------K NITRATE (74.00%)	
88	Compound		--------S (10.40%)	
89	Compound		--------CHARCOAL (15.60%)	
90	Part	9243886	------CARRIER DELAY (AL ALLOY)	3.01 GM
91	Bulk item		--------CHROMATE COATING	
92	Component	9243906	----PARACHUTE ASSY	0.00
93	Part	9243906-1	------CANOPY (NYLON PARACHUTE CLOTH)	0.00
94	Bulk item		--------THREAD COTTON MACHINE	
95	Bulk item		--------THREAD NYLON	
96	Part	9243906-2	SHROUD LINE (TEFLON COATED FIBERGLASS TAPE)	0.00
97	Part	NAS1201C6A19A	------BEAD CHAIN (COMMERCIAL)	
98	Component	9244310	----ILLUM ASSY	
99	Part	9243907	------PLUG ANCHOR (NYLON GLASS FILLED)	24.16 GM
100	Part	9244311	------TUBE (PLASTIC THERMOSETTING)	134.66 GR
101	Part		------PEP (ILLUM COMP)	80.00 GM
102	Compound		--------LUBERSOL DDM (0.11%)	
103	Compound		--------RESIN POLYESTER (10.88%)	
104	Compound		--------CO NAPHTHENATE (0.01%)	
105	Compound		--------PWDR MTL ELLIPSOIDAL (20.00%)	
106	Compound		--------NA NITRATE (41.00%)	
107	Compound		--------PWDR METAL 30/50 (28.00%)	
108	Part		------PEP (IGN COMP)	3.00 GM
109	Compound		--------B AMORPHOUS PWDR (19.00%)	
110	Compound		--------PTFE (18.00%)	
111	Compound		--------K NITRATE (58.00%)	
112	Compound		--------LUBERSOL DDM (0.05%)	
113	Compound		--------RESIN POLYESTER (4.95%)	
114	Part		------PEP (BLACK PWDR CL 1*1)	1.00 GM
115	Compound		--------K NITRATE (74.00%)	
116	Compound		--------S (10.40%)	
117	Compound		--------CHARCOAL (15.60%)	
118	Part	9244315	------LINER (VITON)	0.40 GM
119	Part		------PEP (PYRO 1ST FIRE COMP YLW) (ALT)	5.00 GM
120	Compound		--------BA NITRATE (50.00%)	
121	Compound		--------TETRANITROCARBAZOLE (10.00%)	

122	Compound		--------SI (20.00%)	
123	Compound		--------ZR HYDRIDE (15.00%)	
124	Compound		--------LAMINAC/LUPERSOL (5.00%)	

MIDAS: Detailed Structure B630

Nomenclature: CTG 60MM SMK WP M302A1
NSN: 1310001401536
DODIC: B630
Drawing #: 9215575
Family: CP
Reported weight: 4.1000 LB
Specification: MIL-C-60317
Remarks:

#	Type	Drawing#	Nomenclature	Weight
*1	*Munition	*9215575	CTG 60MM SMK WP M302A1	*4.10 LB
*2	*Part	*9234874	--PAD (WOOL FELT)	*0.00
*3	*Bulk item	*	----ADHESIVE	
*4	*Part	*9215574	--EXTENSION FIN (AL ALLOY)	*0.00
*5	*Bulk item	*	----SEALING COMPOUND	
*6	*Bulk item	*	----SEALING COMPOUND (ALT)	
*7	*Bulk item	*	----CEMENT (9266688) (ALT)	
*8	*Part	*9215574	--EXTENSION FIN (AL ALLOY) (ALT)	*0.13 LB
*9	*Bulk item	*	----SEALING COMPOUND	
*10	*Bulk item	*	----SEALING COMPOUND (ALT)	
*11	*Bulk item	*	----CEMENT (9266688) (ALT)	
*12	*Component	*9205339	--BODY FILLING ASSY	*0.00
*13	*Part	*	----WHT PHOSPHORUS (WHT PHOSPHOUS)	*0.75 LB
*14	*Compound	*	------WHT PHOSPHOUS (100.00%)	
*15	*Component	*10534894	----PROJ 60MM SMK WP M302 MPTS ASSY	*0.00
*16	*Part	*10534895	------BODY (STEEL)	*1.77 LB
*17	*Bulk item	*	--------ZN PHOSPHATE	
*18	*Bulk item	*	--------ENAMEL	
*19	*Bulk item	*	--------ENAMEL (ALT)	
*20	*Bulk item	*	--------LACQUER (ALT)	
*21	*Bulk item	*	--------CORROSION PREVENTIVE CMPD	
*22	*Bulk item	*	--------STENCIL INK	
*23	*Bulk item	*	--------AG BRAZE	
*24	*Bulk item	*	--------AG BRAZE (ALT)	
*25	*Part	*10534895	------BODY (STEEL) (ALT)	*0.00
*26	*Bulk item	*	--------ZN PHOSPHATE	
*27	*Bulk item	*	--------ENAMEL	
*28	*Bulk item	*	--------ENAMEL (ALT)	
*29	*Bulk item	*	--------LACQUER (ALT)	
*30	*Bulk item	*	--------CORROSION PREVENTIVE CMPD	

*31	*Bulk item	*	--------STENCIL INK	
*32	*Bulk item	*	--------AG BRAZE	
*33	*Bulk item	*	--------AG BRAZE (ALT)	
*34	*Part	*10534896	------ADAPTER (STEEL)	*0.00
*35	*Bulk item	*	--------ZN PHOSPHATE	
*36	*Bulk item	*	--------ENAMEL	
*37	*Bulk item	*	--------ENAMEL (ALT)	
*38	*Bulk item	*	--------LACQUER (ALT)	
*39	*Bulk item	*	--------CORROSION PREVENTIVE CMPD	
*40	*Bulk item	*	--------SILICONE COMPOUND	
*41	*Part	*10534896	------ADAPTER (STEEL) (ALT)	*0.00
*42	*Bulk item	*	--------ZN PHOSPHATE	
*43	*Bulk item	*	--------ENAMEL	
*44	*Bulk item	*	--------ENAMEL (ALT)	
*45	*Bulk item	*	--------LACQUER (ALT)	
*46	*Bulk item	*	--------CORROSION PREVENTIVE CMPD	
*47	*Bulk item	*	--------SILICONE COMPOUND	
*48	*Component	*10534899	----CASE PROJ BURSTER M8 ASSY	*0.00
*49	*Part	10534899*1	------CASE BURSTER (STEEL)	*0.41 LB
*50	*Bulk item	*	--------VARNISH PHENOLIC	
*51	*Bulk item	*	--------CORROSION PREVENTIVE CMPD	
*52	*Bulk item	*	--------ADHESIVE	
*53	*Part	10534899*1	------CASE BURSTER (STEEL) (ALT)	*0.00
*54	*Bulk item	*	--------VARNISH PHENOLIC	
*55	*Bulk item	*	--------CORROSION PREVENTIVE CMPD	
*56	*Bulk item	*	--------ADHESIVE	
*57	*Part	10534899*1	------CASE BURSTER (STEEL) (ALT)	*0.00
*58	*Bulk item	*	--------VARNISH PHENOLIC	
*59	*Bulk item	*	--------CORROSION PREVENTIVE CMPD	
*60	*Bulk item	*	--------ADHESIVE	
*61	Component	10534899(ALT)	----CASE PROJ BURSTER M8 ASSY (ALT)	*0.00
*62	*Part	10534899*2	------CASING (STEEL)	*0.00
*63	*Bulk item	*	--------VARNISH PHENOLIC	
*64	*Bulk item	*	--------CORROSION PREVENTIVE CMPD	
*65	*Bulk item	*	--------ADHESIVE	
*66	*Bulk item	*	--------AG BRAZE	
*67	*Bulk item	*	--------AG BRAZE (ALT)	
*68	*Part	10534899*2	------CASING (STEEL) (ALT)	*0.00
*69	*Bulk item	*	--------VARNISH PHENOLIC	
*70	*Bulk item	*	--------CORROSION PREVENTIVE CMPD	

*71	*Bulk item	*	--------ADHESIVE	
*72	*Bulk item	*	--------AG BRAZE	
*73	*Bulk item	*	--------AG BRAZE (ALT)	
*74	*Part	10534899*2	------CASING (STEEL) (ALT)	*0.00
*75	*Bulk item	*	--------VARNISH PHENOLIC	
*76	*Bulk item	*	--------CORROSION PREVENTIVE CMPD	
*77	*Bulk item	*	--------ADHESIVE	
*78	*Bulk item	*	--------AG BRAZE	
*79	*Bulk item	*	--------AG BRAZE (ALT)	
*80	*Part	10534899*3	------SLEEVE (STEEL)	*0.00
*81	*Bulk item	*	--------VARNISH PHENOLIC	
*82	*Bulk item	*	--------CORROSION PREVENTIVE CMPD	
*83	*Bulk item	*	--------AG BRAZE	
*84	*Bulk item	*	--------AG BRAZE (ALT)	
*85	*Part	10534899*3	------SLEEVE (STEEL) (ALT)	*0.00
*86	*Bulk item	*	--------VARNISH PHENOLIC	
*87	*Bulk item	*	--------CORROSION PREVENTIVE CMPD	
*88	*Bulk item	*	--------AG BRAZE	
*89	*Bulk item	*	--------AG BRAZE (ALT)	
*90	*Part	*10534899*3	------SLEEVE (STEEL) (ALT)	*0.00
*91	*Bulk item	*	--------VARNISH PHENOLIC	
*92	*Bulk item	*	--------CORROSION PREVENTIVE CMPD	
*93	*Bulk item	*	--------AG BRAZE	
*94	*Bulk item	*	--------AG BRAZE (ALT)	
*95	*Part	*10534899*3	------SLEEVE (STEEL) (ALT)	*0.00
*96	*Bulk item	*	--------VARNISH PHENOLIC	
*97	*Bulk item	*	--------CORROSION PREVENTIVE CMPD	
*98	*Bulk item	*	--------AG BRAZE	
*99	*Bulk item	*	--------AG BRAZE (ALT)	
*100	*Component	*9205343	--BURSTER PROJ M19 ASSY	*0.00
*101	*Part	*9205342	----TUBE BURSTER (STEEL)	20.00 GM
*102	*Bulk item	*	------VARNISH	
*103	*Bulk item	*	------ZN PHOSPHATE	
*104	*Bulk item	*	------ADHESIVE	
*105	*Bulk item	*	------LACQUER CELL NITRATE (ALT)	
*106	*Part	*9205342	----TUBE BURSTER (AL ALLOY) (ALT)	*0.00
*107	*Bulk item	*	------VARNISH	
*108	*Bulk item	*	------ZN PHOSPHATE	
*109	*Bulk item	*	------ADHESIVE	
*110	*Bulk item	*	------LACQUER CELL NITRATE (ALT)	

*111	*Part	*8846601	----PELLET (PELLET EXPL COMP)	*7.50 GM
*112	*Compound	*	------RDX (98.50%)	
*113	*Compound	*	------STEARIC ACID (1.50%)	
*114	*Part	*	----PEP (COMP A5 (RDX 98.5%)) (ALT)	*7.50 GM
*115	*Compound	*	------RDX (98.50%)	
*116	*Compound	*	------STEARIC ACID (1.50%)	
*117	*Part	*8846602	----DISC (PAPER ONIONSKIN)	*0.00
*118	*Bulk item	*	------ADHESIVE	
*119	*Bulk item	*	------LACQUER CELL NITRATE (ALT)	
*120	*Component	*9242127	--CTG IGN M5A2 ASSY	*0.00
*121	*Part	*	----PROP M9 FLAKE (PROP M9 FLAKE)	40.00 GR
*122	*Compound	*	------ETHYL CENTRALITE (0.75%)	
*123	*Compound	*	------K NITRATE (1.50%)	
*124	*Compound	*	------NC (N 13.15%) (57.75%)	
*125	*Compound	*	------NITROGLYCERIN (40.00%)	
*126	*Part	*8880654	----DISC CLOSING (CHIPBOARD)	*0.00
*127	*Bulk item	*	------LACQUER CELL NITRATE	
*128	*Bulk item	*	------STENCIL INK	
*129	*Bulk item	*	------ADHESIVE RTV (9233455)	
*130	*Component	*8880648	----BODY ASSY	*0.00
*131	*Part	*8880648*1	------BODY (CTG PAPER)	*0.00
*132	*Bulk item	*	--------LACQUER CELL NITRATE	
*133	*Bulk item	*	--------ANIMAL GLUE	
*134	*Bulk item	*	--------TAPE PRESSURE SENS (9233459)	
*135	*Component	*8880649	------TUBE ASSY	*2.80 GR
*136	*Part	*8880652	--------DISC (PAPER ONIONSKIN)	*0.00
*137	*Bulk item	*	----------ANIMAL GLUE	
*138	*Bulk item	*	----------ADHESIVE (ALT)	
*139	*Part	*8880651	--------WASHER (CHIPBOARD)	*1.30 GR
*140	*Bulk item	*	----------SHELLAC	
*141	*Bulk item	*	----------ANIMAL GLUE	
*142	*Bulk item	*	----------ADHESIVE (ALT)	
*143	*Part	*8880650	--------TUBE (PAPER)	*1.30 GR
*144	*Bulk item	*	----------ANIMAL GLUE	
*145	*Bulk item	*	----------ADHESIVE (ALT)	
*146	*Part	*8880653	--------COVER (PAPER ONIONSKIN)	*0.00
*147	*Bulk item	*	----------ANIMAL GLUE	
*148	*Bulk item	*	----------ADHESIVE (ALT)	
*149	*Component	*8880637	--PRIMER PERC M32 ASSY	*0.00
*150	*Part	*8880638	----HEAD (STEEL)	233.08 GR

*151	*Bulk item	*	------ZN PHOSPHATE	
*152	*Part	*8880638	----HEAD (BRASS) (ALT)	*0.00
*153	*Part	*8880639	----HOUSING (STEEL)	79.24 GR
*154	*Bulk item	*	------ZN PHOSPHATE	
*155	*Bulk item	*	------LACQUER CELL NITRATE	
*156	*Part	*8880639	----HOUSING (BRASS) (ALT)	79.24 GR
*157	*Bulk item	*	------LACQUER CELL NITRATE	
*158	*Part	*8880641	----DISC (TAPE POLYESTER)	*0.06 GR
*159	*Part	*8880642	----PLUG FIRING (BRASS)	26.83 GR
*160	*Part	*8880642	----PLUG FIRING (BRASS) (ALT)	26.83 GR
*161	*Part	*8880642	----PLUG FIRING (STEEL) (ALT)	*0.00
*162	*Bulk item	*	------ZN PHOSPHATE	
*163	*Part	*8880640	----PELLET (BLACK PWDR CL 7)	*1.65 GR
*164	*Compound	*	------K NITRATE (74.00%)	
*165	*Compound	*	------S (10.40%)	
*166	*Compound	*	------CHARCOAL (15.60%)	
*167	*Component	*8840536	----PRIMER PERC M35 ASSY	*0.00
*168	*Part	*8840537	------CUP (CU ALLOY)	*0.00
*169	*Bulk item	*	--------LACQUER CELL NITRATE	
*170	*Part	*8840534	------COVER (PAPER SEALING)	*0.00
*171	*Bulk item	*	--------ETHYL ALCOHOL	
*172	*Bulk item	*	--------ACETONE (ALT)	
*173	*Part	*8840535	------ANVIL (CU ALLOY)	*0.00
*174	*Part	*	------PEP (PRIMER MIX #70)	*0.37 GR
*175	*Compound	*	--------PB THIOCYANATE (25.00%)	
*176	*Compound	*	--------K CHLORATE (53.00%)	
*177	*Compound	*	--------SB SULFIDE (17.00%)	
*178	*Compound	*	--------TNT (5.00%)	
*179	*Part	*	------PEP (PRIMER MIX #70 (G/G)) (ALT)	*0.48 GR
*180	*Compound	*	--------PB THIOCYANATE (22.50%)	
*181	*Compound	*	--------K CHLORATE (50.50%)	
*182	*Compound	*	--------SB SULFIDE (14.50%)	
*183	*Compound	*	--------TNT (2.50%)	
*184	*Compound	*	--------GROUND GLASS (10.00%)	
*185	*Component	*9207612	--FIN ASSY M2	*0.40 LB
*186	*Part	*9207545	----FIN (STEEL)	*0.05 LB
*187	*Bulk item	*	------BRAZING	
*188	*Bulk item	*	------ZN PHOSPHATE	
*189	*Bulk item	*	------FE PHOSPHATE (ALT)	
*190	*Bulk item	*	------ENAMEL	

*191	*Bulk item	*	------ENAMEL (ALT)	
*192	*Part	*9207545	----FIN (STEEL) (ALT)	*0.05 LB
*193	*Bulk item	*	------BRAZING	
*194	*Bulk item	*	------ZN PHOSPHATE	
*195	*Bulk item	*	------FE PHOSPHATE (ALT)	
*196	*Bulk item	*	------ENAMEL	
*197	*Bulk item	*	------ENAMEL (ALT)	
*198	*Part	*9207545	----FIN (STEEL) (ALT)	*0.05 LB
*199	*Bulk item	*	------BRAZING	
*200	*Bulk item	*	------ZN PHOSPHATE	
*201	*Bulk item	*	------FE PHOSPHATE (ALT)	
*202	*Bulk item	*	------ENAMEL	
*203	*Bulk item	*	------ENAMEL (ALT)	
*204	*Part	*9207544	----CNTR CTG (STEEL)	*0.00
*205	*Bulk item	*	------BRAZING	
*206	*Bulk item	*	------ZN PHOSPHATE	
*207	*Bulk item	*	------FE PHOSPHATE (ALT)	
*208	*Bulk item	*	------ENAMEL	
*209	*Bulk item	*	------ENAMEL (ALT)	
*210	*Bulk item	*	------ADHESIVE RTV (9233455)	
*211	*Bulk item	*	------PETTMAN CEMENT	
*212	*Bulk item	*	------SEALING COMPOUND	
*213	*Component	*9206823	--HOLDER INCREMENT M1A1 ASSY	*0.01 LB
*214	*Part	*9206825	----COLLAR (STEEL)	*0.00
*215	*Bulk item	*	------BLACK OXIDE COATING	
*216	*Part	*9206825	----COLLAR (STEEL) (ALT)	*0.00
*217	*Bulk item	*	------BLACK OXIDE COATING	
*218	*Part	*9206825	----COLLAR (STEEL) (ALT)	*0.00
*219	*Bulk item	*	------BLACK OXIDE COATING	
*220	*Part	*9206824	----CLIP (STEEL WIRE)	*0.00
*221	*Bulk item	*	------BLACK OXIDE COATING	
*222	*Component	*9216090	--CHG PROP INCR M181	*0.00
*223	*Part	*9216090*1	----CELLOPHANE (CELLOPHANE)	*0.00
*224	*Bulk item	*	------INK MARKING	
*225	*Part	*9216090*1	----CELLOPHANE (CELLOPHANE) (ALT)	*0.00
*226	*Bulk item	*	------INK MARKING	
*227	*Component	*9216186	----INCR CHG ASSY M181	*0.00
*228	*Part	*9216184	------FLAKE SQUARE (PROP M8)	55.00 GR
*229	*Compound	*	--------NITROGLYCERIN (43.00%)	
*230	*Compound	*	--------DIETHYLPHTHALATE (3.00%)	

*231	*Compound	*	--------K NITRATE (1.25%)	
*232	*Compound	*	--------ETHYL CENTRALITE (0.60%)	
*233	*Compound	*	--------NC (52.15%)	
*234	*Bulk item	*	--------THREAD COTTON MACHINE	
*235	*Component	*8800461	--FUZE PD M527B1 ASSY	109.00 GM
*236	*Part	*8798661	----SPRING SLIDER (SPRING STEEL)	*4.90 GR
*237	*Bulk item	*	------CD CHROMATE	
*238	*Part	*8798660	----PLUG SLIDER (BRASS)	114.73 GR
*239	*Bulk item	*	------CHROMATE PASSIVATION TREATMENT	
*240	*Bulk item	*	------SEALER (9220862)	
*241	*Bulk item	*	------PETTMAN CEMENT (ALT)	
*242	*Part	*8798660	----PLUG SLIDER (AL ALLOY) (ALT)	114.73 GR
*243	*Bulk item	*	------PETTMAN CEMENT	
*244	*Bulk item	*	------SEALER (9220862) (ALT)	
*245	*Part	*8798660	----PLUG SLIDER (ZN ALLOY) (ALT)	114.73 GR
*246	*Bulk item	*	------CHROMATE PASSIVATION TREATMENT	
*247	*Bulk item	*	------SEALER (9220862)	
*248	*Bulk item	*	------PETTMAN CEMENT (ALT)	
*249	*Part	*8798660	----PLUG SLIDER (ZN ALLOY) (ALT)	114.73 GR
*250	*Bulk item	*	------CHROMATE PASSIVATION TREATMENT	
*251	*Bulk item	*	------SEALER (9220862)	
*252	*Bulk item	*	------PETTMAN CEMENT (ALT)	
*253	*Part	*8798660	----PLUG SLIDER (AL ALLOY) (ALT)	114.73 GR
*254	*Bulk item	*	------SEALER (9220862)	
*255	*Bulk item	*	------PETTMAN CEMENT (ALT)	
*256	*Part	*8800463	----HOLDER BOOSTER (BRASS)	*0.00
*257	*Bulk item	*	------PETTMAN CEMENT	
*258	*Bulk item	*	------SEALING COMPOUND (ALT)	
*259	*Bulk item	*	------SEALING COMPOUND (ALT)	
*260	*Bulk item	*	------SEALER (9220862) (ALT)	
*261	*Part	*8800463	----HOLDER BOOSTER (AL ALLOY) (ALT)	*0.00
*262	*Bulk item	*	------PETTMAN CEMENT	
*263	*Bulk item	*	------SEALING COMPOUND (ALT)	
*264	*Bulk item	*	------SEALING COMPOUND (ALT)	
*265	*Bulk item	*	------SEALER (9220862) (ALT)	
*266	*Component	*8800466	----BOOSTER CUP ASSY	*0.00
*267	*Part	*8800467	------CUP BOOSTER (AL ALLOY)	*0.00
*268	*Part	*	------PEP (COMP A5 (RDX 98.5%))	650.00 MG
*269	*Compound	*	--------RDX (98.50%)	
*270	*Compound	*	--------STEARIC ACID (1.50%)	

*271	*Component	*8798674	----BOOSTER LEAD CUP ASSY	*9.56 GR
*272	*Part	*8798675	------CUP BOOSTER LEAD (CU ALLOY)	*4.80 GR
*273	*Bulk item	*	--------TAPE ADHESIVE	
*274	*Part	*8798675	------CUP BOOSTER LEAD (AL ALLOY) (ALT)	*4.80 GR
*275	*Bulk item	*	--------TAPE ADHESIVE	
*276	*Part	*	------PEP (TETRYL)	*0.28 GM
*277	*Compound	*	--------TETRYL (100.00%)	
*278	*Component	*8798662	----BODY ASSY	1782.00 GR
*279	*Part	*8798666	------PIN SLIDER GUIDE (STEEL)	*20.00 GR
*280	*Bulk item	*	--------CD CHROMATE	
*281	*Bulk item	*	--------ZN CHROMATE (ALT)	
*282	*Part	*8798665	------PIN SETBACK (STEEL)	*15.54 GR
*283	*Bulk item	*	--------CD CHROMATE	
*284	*Bulk item	*	--------ZN CHROMATE (ALT)	
*285	*Part	*8798670	------SPRING SET-BACK PIN (SPRING STEEL)	*1.20 GR
*286	*Bulk item	*	--------CD CHROMATE	
*287	*Part	*8798668	------PLUG SET-BACK (BRASS)	*26.00 GR
*288	*Bulk item	*	--------CHROMATE PASSIVATION TREATMENT	
*289	*Part	*8798668	------PLUG SETBACK (AL ALLOY) (ALT)	*0.00
*290	*Part	*8798668	------PLUG SET-BACK (AL ALLOY) (ALT)	*0.00
*291	*Part	*8798664	------BODY (AL ALLOY)	1584.90 GR
*292	*Bulk item	*	--------SEALER (9220862)	
*293	*Bulk item	*	--------PETTMAN CEMENT (ALT)	
*294	*Bulk item	*	--------SEALING COMPOUND (ALT)	
*295	*Bulk item	*	--------SEALING COMPOUND (ALT)	
*296	*Part	*8798664	------BODY (AL ALLOY) (ALT)	1584.90 GR
*297	*Bulk item	*	--------SEALER (9220862)	
*298	*Bulk item	*	--------PETTMAN CEMENT (ALT)	
*299	*Bulk item	*	--------SEALING COMPOUND (ALT)	
*300	*Bulk item	*	--------SEALING COMPOUND (ALT)	
*301	*Part	*8798664	------BODY (AL ALLOY) (ALT)	1584.90 GR
*302	*Bulk item	*	--------SEALER (9220862)	
*303	*Bulk item	*	--------PETTMAN CEMENT (ALT)	
*304	*Bulk item	*	--------SEALING COMPOUND (ALT)	
*305	*Bulk item	*	--------SEALING COMPOUND (ALT)	
*306	*Part	*8798664	------BODY (AL ALLOY) (ALT)	1584.90 GR
*307	*Bulk item	*	--------SEALER (9220862)	
*308	*Bulk item	*	--------PETTMAN CEMENT (ALT)	
*309	*Bulk item	*	--------SEALING COMPOUND (ALT)	
*310	*Bulk item	*	--------SEALING COMPOUND (ALT)	

*311	*Part	*8798667	------PIN SAFETY (BRASS)	102.00 GR
*312	*Bulk item	*	--------CHROMATE PASSIVATION TREATMENT	
*313	*Part	*8798667	------PIN SAFETY (STEEL) (ALT)	102.00 GR
*314	*Bulk item	*	--------CD CHROMATE	
*315	*Bulk item	*	--------ZN CHROMATE (ALT)	
*316	*Part	*8798667	------PIN SAFETY (STEEL) (ALT)	102.00 GR
*317	*Bulk item	*	--------CD CHROMATE	
*318	*Bulk item	*	--------ZN CHROMATE (ALT)	
*319	*Part	*8798667	------PIN SAFETY (STEEL) (ALT)	102.00 GR
*320	*Part	*8798669	------SPRING SAFETY PIN (SPRING STEEL)	*12.40 GR
*321	*Bulk item	*	--------CD CHROMATE	
*322	*Part	*8798671	------WIRE SAFETY (SPRING STEEL)	*31.00 GR
*323	*Bulk item	*	--------CD CHROMATE	
*324	*Bulk item	*	--------ZN CHROMATE (ALT)	
*325	*Part	*8798671	------WIRE SAFETY (STAINLESS WIRE) (ALT)	*31.00 GR
*326	*Component	*8798676	----SLIDER ASSY	*74.84 GR
*327	*Part	*8798677	------SLIDER (AL ALLOY)	*65.00 GR
*328	*Part	*8798677	------SLIDER (AL ALLOY) (ALT)	*65.00 GR
*329	*Part	*8798677	------SLIDER (AL ALLOY) (ALT)	*65.00 GR
*330	*Part	*8798677	------SLIDER (AL ALLOY) (ALT)	*65.00 GR
*331	*Component	*7548254	------DETONATOR M44E1 LOADING ASSY	*7.02 GR
*332	*Part	*9297860	--------CUP DETONATOR (AL ALLOY)	*1.81 GR
*333	*Bulk item	*	----------LACQUER CELL NITRATE	
*334	*Part	*9297861	--------DISC DETONATOR CLOSING (AL ALLOY)	*0.00
*335	*Bulk item	*	----------LACQUER CELL NITRATE	
*336	*Part	*	--------PEP (PRIMER MIX*2)	*0.92 GR
*337	*Compound	*	----------PB STYPHNATE (40.00%)	
*338	*Compound	*	----------SB SULFIDE (15.00%)	
*339	*Compound	*	----------BA NITRATE (20.00%)	
*340	*Compound	*	----------PB AZIDE (20.00%)	
*341	*Compound	*	----------TETRACENE (5.00%)	
*342	*Part	*	--------PEP (PRIMER MIX*3) (ALT)	*0.92 GR
*343	*Compound	*	----------PB STYPHNATE (40.00%)	
*344	*Compound	*	----------SB SULFIDE (15.00%)	
*345	*Compound	*	----------BA NITRATE (20.00%)	
*346	*Compound	*	----------PB AZIDE (20.00%)	
*347	*Compound	*	----------TETRACENE (5.00%)	
*348	*Part	*	--------PEP (PRIMER MIX*4) (ALT)	*0.92 GR
*349	*Compound	*	----------PB STYPHNATE (40.00%)	
*350	*Compound	*	----------SB SULFIDE (15.00%)	

*351	*Compound	*	----------BA NITRATE (20.00%)	
*352	*Compound	*	----------PB AZIDE (20.00%)	
*353	*Compound	*	----------TETRACENE (5.00%)	
*354	*Part	*	--------PEP (PRIMER MIX*5) (ALT)	*0.92 GR
*355	*Compound	*	----------SB SULFIDE (15.00%)	
*356	*Compound	*	----------BA NITRATE (20.00%)	
*357	*Compound	*	----------PB AZIDE (20.00%)	
*358	*Compound	*	----------PB STYPHNATE (40.00%)	
*359	*Compound	*	----------TETRACENE (5.00%)	
*360	*Part	*	--------PEP (PRIMER MIX*6) (ALT)	*0.92 GR
*361	*Compound	*	----------PB STYPHNATE (40.00%)	
*362	*Compound	*	----------SB SULFIDE (15.00%)	
*363	*Compound	*	----------BA NITRATE (20.00%)	
*364	*Compound	*	----------PB AZIDE (20.00%)	
*365	*Compound	*	----------TETRACENE (5.00%)	
*366	*Part	*	--------PEP (PRIMER MIX*7) (ALT)	*0.92 GR
*367	*Compound	*	----------PB STYPHNATE (40.00%)	
*368	*Compound	*	----------SB SULFIDE (15.00%)	
*369	*Compound	*	----------BA NITRATE (20.00%)	
*370	*Compound	*	----------PB AZIDE (20.00%)	
*371	*Compound	*	----------TETRACENE (5.00%)	
*372	*Part	*	--------PEP (PB AZIDE)	*2.77 GR
*373	*Compound	*	----------PB AZIDE (100.00%)	
*374	*Part	*	--------PEP (PB AZIDE) (ALT)	*2.77 GR
*375	*Compound	*	----------PB AZIDE (100.00%)	
*376	*Part	*	--------PEP (PB AZIDE) (ALT)	*2.77 GR
*377	*Compound	*	----------PB AZIDE (100.00%)	
*378	*Part	*	--------PEP (RDX)	*1.62 GR
*379	*Compound	*	----------RDX (100.00%)	
*380	*Component	*8800199	----HEAD ASSY COMPLETE	*0.00
*381	*Part	*8800241	------STRIKER (AL ALLOY)	*0.00
*382	*Part	*8800201	------HEAD (AL ALLOY)	*0.00
*383	*Bulk item	*	--------STENCIL INK	
*384	*Bulk item	*	--------PETTMAN CEMENT (ALT)	
*385	*Bulk item	*	--------SEALER (9220862)	
*386	*Bulk item	*	--------SEALING COMPOUND (ALT)	
*387	*Bulk item	*	--------SEALING COMPOUND (ALT)	
*388	*Part	*8800201	------HEAD (AL ALLOY) (ALT)	*0.00
*389	*Bulk item	*	--------STENCIL INK	
*390	*Bulk item	*	--------PETTMAN CEMENT (ALT)	

*391	*Bulk item	*	--------SEALER (9220862)	
*392	*Bulk item	*	--------SEALING COMPOUND (ALT)	
*393	*Bulk item	*	--------SEALING COMPOUND (ALT)	
*394	*Part	*8800201	------HEAD (AL ALLOY) (ALT)	*0.00
*395	*Bulk item	*	--------STENCIL INK	
*396	*Bulk item	*	--------PETTMAN CEMENT (ALT)	
*397	*Bulk item	*	--------SEALER (9220862)	
*398	*Bulk item	*	--------SEALING COMPOUND (ALT)	
*399	*Bulk item	*	--------SEALING COMPOUND (ALT)	
*400	*Part	*8800202	------SPRING PLUNGER (SPRING STEEL)	*0.00
*401	*Bulk item	*	--------CD CHROMATE	
*402	*Component	*8889383	------PULL WIRE ASSY	*0.00
*403	*Part	*8800204	--------WIRE PULL (STAINLESS STEEL)	*0.00
*404	*Part	*8799092	--------CLIP LOWER (AL ALLOY)	*0.00
*405	*Part	*8889383*1	--------CORD GLAZED CURTAIN ()	*0.00
*406	*Bulk item	*	----------MILDEW RESISTANT TREATMENT	
*407	Component	8889383(ALT)	------PULL WIRE ASSY (ALT)	*0.00
*408	*Part	*8800204	--------WIRE PULL (STAINLESS STEEL)	*0.00
*409	*Part	*8799092	--------CLIP LOWER (AL ALLOY)	*0.00
*410	*Part	*8799107	--------CLIP CORD (AL ALLOY)	*0.00
*411	*Part	*8889383*1	--------CORD GLAZED CURTAIN ()	*0.00
*412	*Bulk item	*	----------MILDEW RESISTANT TREATMENT	
*413	*Component	*8800205	----MOVEMENT ASSY	*0.00
*414	*Part	*8800206	------MAINSPRING (ELGILOY)	*0.00
*415	*Bulk item	*	--------LUBRICATING OIL	
*416	*Part	*8800206	------MAINSPRING (STEEL) (ALT)	*0.00
*417	*Bulk item	*	--------LUBRICATING OIL	
*418	*Part	*8800206	------MAINSPRING (STEEL) (ALT)	*0.00
*419	*Bulk item	*	--------LUBRICATING OIL	
*420	*Part	*8886599	RETAINER MAINSPRING (STAINLESS STEEL)	*0.00
*421	*Bulk item	*	--------PASSIVATE TREATMENT	
*422	*Part	*8800207	PLATE MAINSPRING BEARING (STAINLESS STEEL)	*0.00
*423	*Bulk item	*	--------PASSIVATE TREATMENT	
*424	*Part	*8800209	------SPRING RELEASE (SPRING STEEL)	*0.00
*425	*Bulk item	*	--------CD CHROMATE	
*426	*Component	*8800242	------TOP PLATE ASSY	*0.00
*427	*Part	*8800243	--------BUSHING UPPER (BRASS)	*0.00
*428	*Part	*8800244	--------PLATE TOP (BRASS)	*0.00
*429	*Part	*8800244	--------PLATE TOP (BRASS) (ALT)	*0.00
*430	*Part	*8800244	--------PLATE TOP (BRASS) (ALT)	*0.00

*431	*Part	*8800244	--------PLATE TOP (BRASS) (ALT)	*0.00
*432	*Part	*8800244	--------PLATE TOP (BRASS) (ALT)	*0.00
*433	*Part	*8800246	--------GEAR DRIVE (BRASS)	*0.00
*434	*Part	*8800246	--------GEAR DRIVE (BRASS) (ALT)	*0.00
*435	*Component	*8800232	------HOUSING ASSY	*0.00
*436	*Part	*8800235	--------PIN BALANCE LOCK (STAINLESS STEEL)	*0.00
*437	*Bulk item	*	----------PASSIVATE TREATMENT	
*438	*Part	*8800237	SPRING BALANCE LOCK-PIN (SPRING STEEL)	*0.00
*439	*Bulk item	*	----------CD CHROMATE	
*440	*Part	*8800238	SPRING SETBACK DETENT (SPRING STEEL)	*0.00
*441	*Bulk item	*	----------CD CHROMATE	
*442	*Part	*8800236	POST BALANCE LOCK PIN (STAINLESS STEEL)	*0.00
*443	*Bulk item	*	----------PASSIVATE TREATMENT	
*444	*Part	*8800233	--------DETENT SETBACK (BRASS)	*0.00
*445	*Part	*8800234	--------HOUSING (BRASS)	*0.00
*446	*Component	*8800218	------FIRING PIN ASSY	*0.00
*447	*Part	*8800221	--------PIN KEYING (STAINLESS STEEL)	*0.00
*448	*Bulk item	*	----------PASSIVATE TREATMENT	
*449	*Part	*8800221	--------PIN KEYING (BRASS) (ALT)	*0.00
*450	*Part	*8800220	--------PIN FIRING (AL ALLOY)	*0.00
*451	*Part	*8800220	--------PIN FIRING (AL ALLOY) (ALT)	*0.00
*452	*Part	*8800219	--------BUSHING LOWER (BRASS)	*0.00
*453	*Part	*8800223	--------WASHER SPRING ()	*0.00
*454	*Part	*8800222	--------RETAINER BUSHING (BRASS)	*0.00
*455	*Component	*8800230	------GEAR & PINION #3 ASSY	*0.00
*456	*Part	*8800228	--------GEAR #2 & #3 (BRASS)	*0.00
*457	*Bulk item	*	----------LUBRICATING OIL	
*458	*Part	*8800228	--------GEAR #2 & #3 (BRASS) (ALT)	*0.00
*459	*Bulk item	*	----------LUBRICATING OIL	
*460	*Part	*8800228	--------GEAR #2 & #3 (BRASS) (ALT)	*0.00
*461	*Bulk item	*	----------LUBRICATING OIL	
*462	*Part	*8800228	--------GEAR #2 & #3 (BRASS) (ALT)	*0.00
*463	*Bulk item	*	----------LUBRICATING OIL	
*464	*Part	*8800228	--------GEAR #2 & #3 (BRASS) (ALT)	*0.00
*465	*Bulk item	*	----------LUBRICATING OIL	
*466	*Part	*8800231	--------PINION #3 (STAINLESS STEEL)	*0.00
*467	*Bulk item	*	----------PASSIVATE TREATMENT	
*468	*Bulk item	*	----------LUBRICATING OIL	
*469	*Component	*8800227	------GEAR & PINION #2 ASSY	*0.00
*470	*Part	*8800228	--------GEAR #2 & #3 (BRASS)	*0.00

*471	*Bulk item	*	----------LUBRICATING OIL	
*472	*Part	*8800228	--------GEAR #2 & #3 (BRASS) (ALT)	*0.00
*473	*Bulk item	*	----------LUBRICATING OIL	
*474	*Part	*8800228	--------GEAR #2 & #3 (BRASS) (ALT)	*0.00
*475	*Bulk item	*	----------LUBRICATING OIL	
*476	*Part	*8800228	--------GEAR #2 & #3 (BRASS) (ALT)	*0.00
*477	*Bulk item	*	----------LUBRICATING OIL	
*478	*Part	*8800228	--------GEAR #2 & #3 (BRASS) (ALT)	*0.00
*479	*Bulk item	*	----------LUBRICATING OIL	
*480	*Part	*8800229	--------PINION #2 (STAINLESS STEEL)	*0.00
*481	*Bulk item	*	----------PASSIVATE TREATMENT	
*482	*Bulk item	*	----------LUBRICATING OIL	
*483	*Component	*8800224	------GEAR & PINION #1 ASSY	*0.00
*484	*Part	*8800225	--------GEAR #1 (BRASS)	*0.00
*485	*Bulk item	*	----------LUBRICATING OIL	
*486	*Part	*8800225	--------GEAR #1 (BRASS) (ALT)	*0.00
*487	*Bulk item	*	----------LUBRICATING OIL	
*488	*Part	*8800225	--------GEAR #1 (BRASS) (ALT)	*0.00
*489	*Bulk item	*	----------LUBRICATING OIL	
*490	*Part	*8800225	--------GEAR #1 (BRASS) (ALT)	*0.00
*491	*Bulk item	*	----------LUBRICATING OIL	
*492	*Part	*8800225	--------GEAR #1 (BRASS) (ALT)	*0.00
*493	*Bulk item	*	----------LUBRICATING OIL	
*494	*Part	*8800226	--------PINION #1 (STAINLESS STEEL)	*0.00
*495	*Bulk item	*	----------PASSIVATE TREATMENT	
*496	*Bulk item	*	----------LUBRICATING OIL	
*497	*Component	*8800215	------ESCAPE WHEEL & PINION ASSY	*0.00
*498	*Part	*8800217	--------WHEEL ESCAPE (BRASS)	*0.00
*499	*Part	*8800217	--------WHEEL ESCAPE (BRASS) (ALT)	*0.00
*500	*Part	*8800217	--------WHEEL ESCAPE (BRASS) (ALT)	*0.00
*501	*Part	*8800217	--------WHEEL ESCAPE (BRASS) (ALT)	*0.00
*502	*Part	*8800216	PINION ESCAPE WHEEL (STAINLESS STEEL)	*0.00
*503	*Bulk item	*	----------PASSIVATE TREATMENT	
*504	*Component	*8800210	------BALANCE & PIN ASSY	*0.00
*505	*Part	*8800214	--------SHAFT BALANCE (STAINLESS STEEL)	*0.00
*506	*Bulk item	*	----------PASSIVATE TREATMENT	
*507	*Bulk item	*	----------LUBRICATING OIL	
*508	*Part	*8800211	--------BALANCE (BRASS)	*0.00
*509	*Bulk item	*	----------LUBRICATING OIL	
*510	*Part	*8800212	--------PIN BALANCE (STAINLESS STEEL)	*0.00

*511	*Bulk item	*	----------PASSIVATE TREATMENT	
*512	*Bulk item	*	----------LUBRICATING OIL	
*513	*Part	*8800213	--------PIN BALANCE WEIGHT (BRASS)	*0.00
*514	*Bulk item	*	----------LUBRICATING OIL	

USADACS - MIDAS DETAILED STRUCTURE FOR A MUNITION (LESS BULK ITEMS)

06/09/97

Nomenclature: CTG 60MM HE M49A4

NSN: 1310001348359 DODIC: B632 Reported Weight: 3.2500 LB

DRAWING #	NOMENCLATURE	TYPE	SPECIFICATION	TGCS	-- REPORTED --- WEIGHT	UNIT	FACTOR	FACTORED WEIGHT(LB)
9220179	CTG 60MM HE M49A4	Munition	MIL-C-14750		3.2500	LB	1.0000	
9215574	FIN EXTENSION (AL ALLOY)	Part	ASTM-B211		0.1300	LB	1.0000	0.13000000
9207926	BODY LD ASSY	Component					1.0000	
	PEP (COMP B)	Part	MIL-C-401	//A OR B///	0.4200	LB	1.0000	0.42000000
	RDX (60.00%)	Compound	MIL-R-398	///A//				
	TNT (39.00%)	Compound	MIL-T-248					
	WAX (1.00%)	Compound	MIL-W-20553					
	PEP (COMP B4) (ALT)	Part	MIL-C-46652	/2/A OR B///	0.4200	LB	1.0000	
	RDX (60.00%)	Compound	MIL-R-398	/B////				
	TNT (40.00%)	Compound	MIL-T-248	//1///				
9241480	BODY MARKING	Component	MIL-P-14785				1.0000	
9207928	BODY (FE CASTING)	Part	MIL-C-45971	///53004//	1.6500	LB	1.0000	1.65000000
9207928	BODY (FE CASTING) (ALT)	Part	MIL-C-45971	///45007//	1.6500	LB	1.0000	
10551926	PROJ 60MM HE M49A3 MPTS (ALT)	Component	MIL-P-50357				1.0000	
10535906	BODY (STEEL)	Part	ASTM-A322	/1340////	1.7300	LB	1.0000	
10535905	PROJ 60MM HE M49A2 MPTS (ALT)	Component	MIL-P-60605				1.0000	
10535924	BODY (STEEL)	Part	ASTM-A576		1.7300	LB	1.0000	
10535924	BODY (STEEL) (ALT)	Part	MIL-S-11310		1.7300	LB	1.0000	
10535924	BODY (STEEL) (ALT)	Part	QQ-S-635		1.7300	LB	1.0000	
10551909	PROJ 60MM HE M49A3 MPTS (ALT)	Component	MIL-P-14863				1.0000	
10551923	BODY (FE CASTING)	Part	MIL-C-60625		1.7300	LB	1.0000	
9242127	CTG IGN M5A2 ASSY	Component	MIL-C-11609				1.0000	
	PROP M9 FLAKE (PROP M9 FLAKE)	Part	MIL-P-60398	/1////	40.0000	GR	1.0000	0.00571400
	ETHYL CENTRALITE (0.75%)	Compound	MIL-E-255	///2,3//				
	K NITRATE (1.50%)	Compound	MIL-P-156	///2,3,4//				
	NC (N 13.15%) (57.75%)	Compound	MIL-N-244	/2/C///				
	NITROGLYCERIN (40.00%)	Compound	MIL-N-246	/1////				
8880654	DISC CLOSING (CHIPBOARD)	Part	UU-C-282				1.0000	
8880648	BODY ASSY	Component					1.0000	
8880648*1	BODY (CTG PAPER)	Part	COMMERCIAL				1.0000	
8880649	TUBE ASSY	Component			2.8000	GR	1.0000	
8880652	DISC (PAPER ONIONSKIN)	Part	MIL-P-157				1.0000	
8880651	WASHER (CHIPBOARD)	Part	UU-C-282		1.3000	GR	1.0000	0.00018600
8880650	TUBE (PAPER)	Part	COMMERCIAL		1.3000	GR	1.0000	0.00018600
8880653	COVER (PAPER ONIONSKIN)	Part	MIL-P-157				1.0000	
8880637	PRIMER PERC ASSY M32	Component	MIL-P-60316				1.0000	
8880640	PELLET (BLACK PWDR CL 7)	Part	MIL-P-223	///7//	1.6500	GR	1.0000	0.00023600
	K NITRATE (74.00%)	Compound	MIL-P-156	///A//				
	S (10.40%)	Compound	MIL-S-14929	/1/COMM.///				
	CHARCOAL (15.60%)	Compound	JAN-C-178	//A///				
8880641	DISC (PAPER ONIONSKIN)	Part	MIL-P-157		0.0600	GR	1.0000	0.00000900
8880641	DISC (TAPE PRESS SENSITIVE)	Part	COMMERCIAL	/PAB////	0.0600	GR	1.0000	0.00000900
8880639	HOUSING (STEEL)	Part	ASTM-A108	//**///	79.2400	GR	1.0000	0.01132000
8880639	HOUSING (BRS) (ALT)	Part	ASTM-B16		79.2400	GR	1.0000	
8880642	PLUG FIRING (BRS)	Part	ASTM-B16		26.8300	GR	1.0000	0.00383300
8880642	PLUG FIRING (BRS) (ALT)	Part	ASTM-B36	//8///	26.8300	GR	1.0000	
8880642	PLUG FIRING (STEEL) (ALT)	Part	ASTM-A108	//C1118///	26.8300	GR	1.0000	
8880638	HEAD (STEEL)	Part	ASTM-A108	//**///	233.0800	GR	1.0000	0.03329800
8880638	HEAD (BRS) (ALT)	Part	ASTM-B16		233.0800	GR	1.0000	
8840536	PRIMER PERC M35 ASSY	Component	MIL-P-46425				1.0000	
8840537	CUP (CU ALLOY)	Part	MIL-C-50	//260///			1.0000	
8840534	COVER (PAPER FOILING)	Part	MIL-P-60619	/3////			1.0000	

USADACS - MIDAS DETAILED STRUCTURE FOR A MUNITION (LESS BULK ITEMS)

Nomenclature: CTG 60MM HE M49A4
NSN: 1310001348359 DODIC: B632 Reported Weight: 3.2500 LB

DRAWING #	NOMENCLATURE	TYPE	SPECIFICATION	TGCS	-- REPORTED --- WEIGHT	UNIT	FACTOR	FACTORED WEIGHT(LB)
8840535	ANVIL (CU ALLOY)	Part	MIL-C-50	//260///			1.0000	
	PEP (PRIMER MIX #70)	Part		///1//	0.3700	GR	1.0000	0.00005300
	PB THIOCYANATE (25.00%)	Compound	MIL-L-65					
	K CHLORATE (53.00%)	Compound	MIL-P-150	//A/1//				
	SB SULFIDE (17.00%)	Compound	MIL-A-159	///1//				
	TNT (5.00%)	Compound	MIL-T-248	/1 OR 2////				
	PEP (PRIMER MIX #70 (G/G)) (ALT)	Part			48.0000	GR	1.0000	
	PB THIOCYANATE (22.50%)	Compound	MIL-L-65					
	K CHLORATE (50.50%)	Compound	MIL-P-150	//A/1//				
	SB SULFIDE (14.50%)	Compound	MIL-A-159	///1//				
	TNT (2.50%)	Compound	MIL-T-248	/1 OR 2////				
	GROUND GLASS (10.00%)	Compound	JAN-G-479	///A//				
9207612	FIN ASSY M2	Component	MIL-F-14902		0.4000	LB	1.0000	
9207545	FIN (STEEL)	Part	ASTM-A570	/1020////	0.0500	LB	4.0000	0.20000000
9207545	FIN (STEEL) (ALT)	Part	ASTM-A109	/1020////	0.0500	LB	4.0000	
9207545	FIN (STEEL) (ALT)	Part	QQ-S-698	/1020////	0.0500	LB	4.0000	
9207544	CNTR CTG (STEEL)	Part	ASTM-A108	//1137///			1.0000	
9206823	HOLDER INCREMENT M1A1 ASSY	Component			0.0050	LB	1.0000	
9206825	COLLAR (STEEL)	Part	ASTM-A570	//**///			1.0000	
9206825	COLLAR (STEEL) (ALT)	Part	ASTM-A512				1.0000	
9206825	COLLAR (STEEL) (ALT)	Part	ASTM-A109				1.0000	
9206824	CLIP (STEEL WIRE)	Part	QQ-W-470				2.0000	
9216090	CHG PROP INCR M181	Component	MIL-I-14961				4.0000	
9216090*1	CELLOPHANE (CELLOPHANE)	Part	MIL-C-13510				2.0000	
9216090*1	CELLOPHANE (CELLOPHANE) (ALT)	Part	9288786				2.0000	
9216186	INCR CHG ASSY M181	Component					1.0000	
9216184	FLAKE SQUARE (PROP M8)	Part	MIL-STD-652		55.0000	GR	1.0000	0.03142800
	NITROGLYCERIN (43.00%)	Compound	MIL-N-246	/1////				
	DIETHYLPHTHALATE (3.00%)	Compound	MIL-D-242					
	K NITRATE (1.25%)	Compound	MIL-P-156	///2,3,OR 4//				
	ETHYL CENTRALITE (0.60%)	Compound	MIL-E-255	///2 OR 3//				
	NC (52.15%)	Compound	MIL-N-244	/1/C///				
8800197	FUZE PD M525 ASSY	Component	MIL-F-60342		0.4400	LB	1.0000	
8798659	PELLET BOOSTER (RDX)	Part	MIL-P-45486A	/3A////	16.9000	GM	1.0000	0.03726500
	RDX (100.00%)	Compound	MIL-P-45486A	/3A////				
8798659	PELLET BOOSTER (TETRYL PELLETS (TETRYL 98%)) (ALT)	Part	MIL-P-46464	/2////	16.9000	GM	1.0000	
	GRAPHITE (0.50%)	Compound	MIL-G-155	//1 OR 2///				
	TETRYL (MIN) (98.00%)	Compound	MIL-T-339					
	BA STEARATE (0.75%)	Compound	MIL-B-366					
	CA STEARATE (0.75%)	Compound	MIL-C-263					
8798658	CUP BOOSTER (AL ALLOY)	Part	ASTM-B85	//S12B///	121.0000	GR	1.0000	0.01728600
8798658	CUP BOOSTER (AL ALLOY) (ALT)	Part	ASTM-B85	//S12A///	121.0000	GR	1.0000	
8798658	CUP BOOSTER (AL ALLOY) (ALT)	Part	ASTM-B85	//SC84A///	121.0000	GR	1.0000	
8798658	CUP BOOSTER (AL ALLOY) (ALT)	Part	ASTM-B209	//1100///	121.0000	GR	1.0000	
8798658	CUP BOOSTER (AL ALLOY) (ALT)	Part	ASTM-B209	//3003///	121.0000	GR	1.0000	
8798658	CUP BOOSTER (AL ALLOY) (ALT)	Part	ASTM-B209	//5052///	121.0000	GR	1.0000	
8798661	SPRING SLIDER (SPRING STEEL)	Part	ASTM-A228		4.9000	GR	1.0000	0.00070000
8798660	PLUG SLIDER (BRS)	Part	ASTM-B16		114.7300	GR	1.0000	0.01639000
8798660	PLUG SLIDER (AL ALLOY) (ALT)	Part	ASTM-B211	//2011///	114.7300	GR	1.0000	
8798660	PLUG SLIDER (ZN ALLOY) (ALT)	Part	ASTM-B86	//AG40A///	114.7300	GR	1.0000	
8798660	PLUG SLIDER (ZN ALLOY) (ALT)	Part	ASTM-B86	//AC41A///	114.7300	GR	1.0000	
8798660	PLUG SLIDER (AL ALLOY) (ALT)	Part	ASTM-B211	//2017///	114.7300	GR	1.0000	
8798660	PLUG SLIDER (AL ALLOY) (ALT)	Part	ASTM-B211	//2024///	114.7300	GR	1.0000	

USADACS - MIDAS DETAILED STRUCTURE FOR A MUNITION (LESS BULK ITEMS)

Nomenclature: CTG 60MM HE M49A4
NSN: 1310001348359 DODIC: B632 Reported Weight: 3.2500 LB

DRAWING #	NOMENCLATURE	TYPE	SPECIFICATION	TGCS	-- REPORTED --- WEIGHT	UNIT	FACTOR	FACTORED WEIGHT(LB)
8798660	PLUG SLIDER (AL ALLOY) (ALT)	Part	ASTM-B221	//2024///	114.7300	GR	1.0000	
8798659	PELLET BOOSTER (COMP A5 (RDX 98.5%)) (ALT)	Part	MIL-E-14970		16.9000	GM	1.0000	
	RDX (98.50%)	Compound	MIL-R-398					
	STEARIC ACID (1.50%)	Compound	MIL-S-271					
8800199	HEAD ASSY COMPLETE	Component	MIL-F-46470				1.0000	
8800241	STRIKER (AL ALLOY)	Part	ASTM-B209	//2024///			1.0000	
8800201	HEAD (AL ALLOY)	Part	ASTM-B210	//2024///			1.0000	
8800201	HEAD (AL ALLOY) (ALT)	Part	ASTM-B211	//2011///			1.0000	
8800201	HEAD (AL ALLOY) (ALT)	Part	ASTM-B211	//2017///			1.0000	
8800202	SPRING PLUNGER (SPRING STEEL)	Part	ASTM-A228				1.0000	
8889383	PULL WIRE ASSY	Component					1.0000	
8800204	WIRE PULL (STAINLESS STEEL)	Part	ASTM-A313				1.0000	
8799092	CLIP LOWER (AL ALLOY)	Part	ASTM-B209	//5052///			1.0000	
8889383*1	CORD GLAZED CURTAIN ()	Part	COMMERCIAL	//2///			1.0000	
8889383(ALT)	PULL WIRE ASSY (ALT)	Component					1.0000	
8800204	WIRE PULL (STAINLESS STEEL)	Part	ASTM-A313				1.0000	
8799092	CLIP LOWER (AL ALLOY)	Part	ASTM-B209	//5052///			1.0000	
8799107	CLIP CORD (AL ALLOY)	Part	ASTM-B209	//5052///			2.0000	
8889383*1	CORD GLAZED CURTAIN ()	Part	COMMERCIAL	//2///			1.0000	
8800205	MOVEMENT ASSY	Component					1.0000	
8800206	MAINSPRING (ELGILOY)	Part	COMMERCIAL				1.0000	
8800206	MAINSPRING (STEEL) (ALT)	Part	WS-6505	//17-CR///			1.0000	
8800206	MAINSPRING (STEEL) (ALT)	Part	WS-6505	//8-NI///			1.0000	
8886599	RETAINER MAINSPRING (STAINLESS STEEL)	Part	ASTM-A167	//304,305///			1.0000	
8800207	PLATE MAINSPRING BEARING (STAINLESS STEEL)	Part	ASTM-A167				1.0000	
8800209	SPRING RELEASE (SPRING STEEL)	Part	ASTM-A228				1.0000	
8800242	TOP PLATE ASSY	Component					1.0000	
8800243	BUSHING UPPER (BRS)	Part	ASTM-B16				1.0000	
8800244	PLATE TOP (BRS)	Part	ASTM-B36	//C24000///			1.0000	
8800244	PLATE TOP (BRS) (ALT)	Part	ASTM-B36	//C26000///			1.0000	
8800244	PLATE TOP (BRS) (ALT)	Part	ASTM-B36	//C26800///			1.0000	
8800244	PLATE TOP (BRS) (ALT)	Part	ASTM-B121	//C35300///			1.0000	
8800244	PLATE TOP (BRS) (ALT)	Part	ASTM-B121	//C34200///			1.0000	
8800246	GEAR DRIVE (BRS)	Part	ASTM-B36	//C26000///			1.0000	
8800246	GEAR DRIVE (BRS) (ALT)	Part	ASTM-B36	//C26800///			1.0000	
8800232	HOUSING ASSY	Component					1.0000	
8800235	PIN BALANCE LOCK (STAINLESS STEEL)	Part	ASTM-A581	/XM-6,303////			1.0000	
8800237	SPRING BALANCE LOCK-PIN (SPRING STEEL)	Part	ASTM-A228				1.0000	
8800238	SPRING SETBACK DETENT (SPRING STEEL)	Part	ASTM-A228				1.0000	
8800236	POST BALANCE LOCK PIN (STAINLESS STEEL)	Part	ASTM-A581	/XM-6,303////			1.0000	
8800233	DETENT SETBACK (BRS)	Part	ASTM-B16				1.0000	
8800234	HOUSING (BRS)	Part	ASTM-B16				1.0000	
8800218	FIRING PIN ASSY	Component					1.0000	
8800221	PIN KEYING (STAINLESS STEEL)	Part	ASTM-A581	/XM-6////			1.0000	
8800221	PIN KEYING (BRS) (ALT)	Part	ASTM-B134	//C26000///			1.0000	
8800220	PIN FIRING (AL ALLOY)	Part	ASTM-B221	//2024///			1.0000	
8800220	PIN FIRING (AL ALLOY) (ALT)	Part	ASTM-B211	//2024///			1.0000	
8800219	BUSHING LOWER (BRS)	Part	ASTM-B16				1.0000	
8800223	WASHER SPRING ()	Part	COMMERCIAL				1.0000	
8800222	RETAINER BUSHING (BRS)	Part	ASTM-B16				1.0000	
8800230	GEAR & PINION #3 ASSY	Component					1.0000	
8800228	GEAR #2 & #3 (BRS)	Part	ASTM-B36	//C24000///			1.0000	
8800228	GEAR #2 & #3 (BRS) (ALT)	Part	ASTM-B36	//C26000///			1.0000	

USADACS - MIDAS DETAILED STRUCTURE FOR A MUNITION (LESS BULK ITEMS)

Nomenclature: CTG 60MM HE M49A4
NSN: 1310001348359 DODIC: B632 Reported Weight: 3.2500 LB

DRAWING #	NOMENCLATURE	TYPE	SPECIFICATION	TGCS	-- REPORTED --- WEIGHT	UNIT	FACTOR	FACTORED WEIGHT(LB)
8800228	GEAR #2 & #3 (BRS) (ALT)	Part	ASTM-B36	//C26800///			1.0000	
8800228	GEAR #2 & #3 (BRS) (ALT)	Part	ASTM-B121	//C35300///			1.0000	
8800228	GEAR #2 & #3 (BRS) (ALT)	Part	ASTM-B121	//C34200///			1.0000	
8800231	PINION #3 (STAINLESS STEEL)	Part	ASTM-A581	/XM-6,303////			1.0000	
8800227	GEAR & PINION #2 ASSY	Component					1.0000	
8800228	GEAR #2 & #3 (BRS)	Part	ASTM-B36	//C24000///			1.0000	
8800228	GEAR #2 & #3 (BRS) (ALT)	Part	ASTM-B36	//C26000///			1.0000	
8800228	GEAR #2 & #3 (BRS) (ALT)	Part	ASTM-B36	//C26800///			1.0000	
8800228	GEAR #2 & #3 (BRS) (ALT)	Part	ASTM-B121	//C35300///			1.0000	
8800228	GEAR #2 & #3 (BRS) (ALT)	Part	ASTM-B121	//C34200///			1.0000	
8800229	PINION #2 (STAINLESS STEEL)	Part	ASTM-A581	/XM-6;303////			1.0000	
8800224	GEAR & PINION #1 ASSY	Component					1.0000	
8800225	GEAR #1 (BRS)	Part	ASTM-B36	//C24000///			1.0000	
8800225	GEAR #1 (BRS) (ALT)	Part	ASTM-B36	//C26000///			1.0000	
8800225	GEAR #1 (BRS) (ALT)	Part	ASTM-B36	//C26800///			1.0000	
8800225	GEAR #1 (BRS) (ALT)	Part	ASTM-B121	//C35300///			1.0000	
8800225	GEAR #1 (BRS) (ALT)	Part	ASTM-B121	//C34200///			1.0000	
8800226	PINION #1 (STAINLESS STEEL)	Part	ASTM-A581	/XM-6,303////			1.0000	
8800215	ESCAPE WHEEL & PINION ASSY	Component					1.0000	
8800217	WHEEL ESCAPE (BRS)	Part	ASTM-B36	//C26000///			1.0000	
8800217	WHEEL ESCAPE (BRS) (ALT)	Part	ASTM-B36	//C26800///			1.0000	
8800217	WHEEL ESCAPE (BRS) (ALT)	Part	ASTM-B121	//C35000///			1.0000	
8800217	WHEEL ESCAPE (BRS) (ALT)	Part	ASTM-B121	//C34200///			1.0000	
8800216	PINION ESCAPE WHEEL (STAINLESS STEEL)	Part	ASTM-A581	/XM-6;303////			1.0000	
8800210	BALANCE & PIN ASSY	Component					1.0000	
8800214	SHAFT BALANCE (STAINLESS STEEL)	Part	ASTM-A581	/XM-6;303////			1.0000	
8800211	BALANCE (BRS)	Part	ASTM-B16				1.0000	
8800212	PIN BALANCE (STAINLESS STEEL)	Part	ASTM-A581	/XM-6////			2.0000	
8800213	PIN BALANCE WEIGHT (BRS)	Part	ASTM-B16				1.0000	
8798676	SLIDER ASSY	Component			74.8400	GR	1.0000	
8798677	SLIDER (AL ALLOY)	Part	ASTM-B211	//2011///	65.0000	GR	1.0000	0.00928600
8798677	SLIDER (AL ALLOY) (ALT)	Part	ASTM-B211	//2024///	65.0000	GR	1.0000	
8798677	SLIDER (AL ALLOY) (ALT)	Part	ASTM-B221	//2024///	65.0000	GR	1.0000	
8798677	SLIDER (AL ALLOY) (ALT)	Part	ASTM-B211	//2017///	65.0000	GR	1.0000	
7548254	DETONATOR M44E1 LOADING ASSY	Component	MIL-D-46209		7.0200	GR	1.0000	
9297860	CUP DETONATOR (AL ALLOY)	Part	QQ-A-250/1	//1100-0///	1.8100	GR	1.0000	0.00025900
9297861	DISC DETONATOR CLOSING (AL ALLOY)	Part	QQ-A-250/1	//1100-0///			1.0000	
	PEP (PRIMER MIX*2)	Part	9297836		0.9200	GR	1.0000	0.00013100
	PB STYPHNATE (40.00%)	Compound	MIL-L-16355	/2////				
	SB SULFIDE (15.00%)	Compound	MIL-A-159	///5//				
	BA NITRATE (20.00%)	Compound	MIL-B-162	///1//				
	PB AZIDE (20.00%)	Compound	MIL-L-3055	/1////				
	TETRACENE (5.00%)	Compound	MIL-T-46938					
	PEP (PRIMER MIX*3) (ALT)	Part	9297836		0.9200	GR	1.0000	
	PB STYPHNATE (40.00%)	Compound	MIL-L-16355	/2////				
	SB SULFIDE (15.00%)	Compound	MIL-A-159	///5//				
	BA NITRATE (20.00%)	Compound	MIL-B-162	///1//				
	PB AZIDE (20.00%)	Compound	MIL-L-46225					
	TETRACENE (5.00%)	Compound	MIL-T-46938					
	PEP (PRIMER MIX*4) (ALT)	Part	9297836		0.9200	GR	1.0000	
	PB STYPHNATE (40.00%)	Compound	MIL-L-16355	/2////				
	SB SULFIDE (15.00%)	Compound	MIL-A-159	///5//				
	BA NITRATE (20.00%)	Compound	MIL-B-162	///1//				

USADACS - MIDAS DETAILED STRUCTURE FOR A MUNITION (LESS BULK ITEMS)

Nomenclature: CTG 60MM HE M49A4
NSN: 1310001348359 DODIC: B632 Reported Weight: 3.2500 LB

DRAWING #	NOMENCLATURE	TYPE	SPECIFICATION	TGCS	-- REPORTED --- WEIGHT	UNIT	FACTOR	FACTORED WEIGHT(LB)
	PB AZIDE (20.00%)	Compound	MIL-L-14758					
	TETRACENE (5.00%)	Compound	MIL-T-46938					
	PEP (PRIMER MIX*5) (ALT)	Part	9297836		0.9200	GR	1.0000	
	SB SULFIDE (15.00%)	Compound	MIL-A-159	///5//				
	BA NITRATE (20.00%)	Compound	MIL-B-162	///1//				
	PB AZIDE (20.00%)	Compound	MIL-L-3055	/1////				
	PB STYPHNATE (40.00%)	Compound	MIL-L-757					
	TETRACENE (5.00%)	Compound	MIL-T-46938					
	PEP (PRIMER MIX*6) (ALT)	Part	9297836		0.9200	GR	1.0000	
	PB STYPHNATE (40.00%)	Compound	MIL-L-757					
	SB SULFIDE (15.00%)	Compound	MIL-A-159	///5//				
	BA NITRATE (20.00%)	Compound	MIL-B-162	///1//				
	PB AZIDE (20.00%)	Compound	MIL-L-46225					
	TETRACENE (5.00%)	Compound	MIL-T-46938					
	PEP (PRIMER MIX*7) (ALT)	Part	9297836		0.9200	GR	1.0000	
	PB STYPHNATE (40.00%)	Compound	MIL-L-757					
	SB SULFIDE (15.00%)	Compound	MIL-A-159	///5//				
	BA NITRATE (20.00%)	Compound	MIL-B-162	///1//				
	PB AZIDE (20.00%)	Compound	MIL-L-14758					
	TETRACENE (5.00%)	Compound	MIL-T-46938					
	PEP (PB AZIDE)	Part	MIL-L-3055	/1////	2.7700	GR	1.0000	0.00039600
	PB AZIDE (100.00%)	Compound	MIL-L-3055	/1////				
	PEP (PB AZIDE) (ALT)	Part	MIL-L-46225		2.7700	GR	1.0000	
	PB AZIDE (100.00%)	Compound	MIL-L-46225					
	PEP (PB AZIDE) (ALT)	Part	MIL-L-14758		2.7700	GR	1.0000	
	PB AZIDE (100.00%)	Compound	MIL-L-14758					
	PEP (RDX)	Part	MIL-R-398	/1////	1.6200	GR	1.0000	0.00023100
	RDX (100.00%)	Compound	MIL-R-398	/1////				
8798662	BODY ASSY	Component	MIL-F-60323		1782.0000	GR	1.0000	
8798671	WIRE SAFETY (SPRING STEEL)	Part	ASTM-A228		31.0000	GR	1.0000	0.00442900
8798671	WIRE SAFETY (STAINLESS WIRE) (ALT)	Part	QQ-W-423	/302////	31.0000	GR	1.0000	
8798666	PIN SLIDER GUIDE (STEEL)	Part	ASTM-A108	//1117///	20.0000	GR	1.0000	0.00285700
8798666	PIN SLIDER GUIDE (STEEL) (ALT)	Part	ASTM-A108	//1212///	20.0000	GR	1.0000	
8798666	PIN SLIDER GUIDE (STEEL) (ALT)	Part	ASTM-A108	//1213///	20.0000	GR	1.0000	
8798666	PIN SLIDER GUIDE (STEEL) (ALT)	Part	ASTM-A108	//1215///	20.0000	GR	1.0000	
8798665	PIN SET-BACK (STEEL)	Part	ASTM-A108		15.5400	GR	1.0000	0.00222000
8798665	PIN SET-BACK (STEEL) (ALT)	Part	ASTM-A108	//1215///	15.5400	GR	1.0000	
8798670	SPRING SET-BACK PIN (SPRING STEEL)	Part	ASTM-A228		1.2000	GR	1.0000	0.00017100
8798668	PLUG SET-BACK (BRS)	Part	ASTM-B16		26.0000	GR	1.0000	0.00371400
8798668	PLUG SET-BACK (AL ALLOY) (ALT)	Part	ASTM-B211	//2011///			1.0000	
8798668	PLUG SET-BACK (AL ALLOY) (ALT)	Part	ASTM-B211	//2017///			1.0000	
8798668	PLUG SET-BACK (AL ALLOY) (ALT)	Part	ASTM-B221	//2024///			1.0000	
8798668	PLUG SET-BACK (AL ALLOY) (ALT)	Part	ASTM-B211	//2024///			1.0000	
8798664	BODY (AL ALLOY)	Part	ASTM-B211	//2011///	1584.9000	GR	1.0000	0.22641900
8798664	BODY (AL ALLOY) (ALT)	Part	ASTM-B85	//SC84A///	1584.9000	GR	1.0000	
8798664	BODY (AL ALLOY) (ALT)	Part	ASTM-B85	//SC84B///	1584.9000	GR	1.0000	
8798664	BODY (AL ALLOY) (ALT)	Part	ASTM-B108	//SC64D///	1584.9000	GR	1.0000	
8798667	PIN SAFETY (BRS)	Part	ASTM-B16		102.0000	GR	1.0000	0.01457200
8798667	PIN SAFETY (STEEL) (ALT)	Part	ASTM-A108	//1010///	102.0000	GR	1.0000	
8798667	PIN SAFETY (STEEL) (ALT)	Part	ASTM-A108	//1020///	102.0000	GR	1.0000	
8798667	PIN SAFETY (STEEL) (ALT)	Part	ASTM-A108	//12L14///	102.0000	GR	1.0000	
8798669	SPRING SAFETY PIN (SPRING STEEL)	Part	ASTM-A228		12.4000	GR	1.0000	0.00177100
8798674	BOOSTER LEAD CUP ASSY	Component			9.5600	GR	1.0000	

USADACS - MIDAS DETAILED STRUCTURE FOR A MUNITION (LESS BULK ITEMS)

06/09/97

Nomenclature: CTG 60MM HE M49A4

NSN: 1310001348359 DODIC: B632 Reported Weight: 3.2500 LB

DRAWING #	NOMENCLATURE	TYPE	SPECIFICATION	TGCS	-- REPORTED --- WEIGHT	UNIT	FACTOR	FACTORED WEIGHT(LB)
8798675	CUP BOOSTER LEAD (CU ALLOY)	Part	MIL-C-21768	////TAPE/	4.8000	GR	1.0000	0.00068600
8798675	CUP BOOSTER LEAD (AL ALLOY) (ALT)	Part	ASTM-B209	////TAPE/	4.8000	GR	1.0000	
	PEP (TETRYL)	Part	MIL-T-339		0.2820	GM	1.0000	0.00062200
	TETRYL (100.00%)	Compound	MIL-T-339					
								2.82567700

MIDAS: Detailed Structure B642

Nomenclature: CTG 60MM HE M720
NSN: 1310010227680
DODIC: B642
Drawing #: 9275526
Family: HC
Reported weight: 3.7500 LB
Specification: MIL-C-48368
Remarks:

#	Type	Drawing#	Nomenclature	Weight
*1	*Munition	*9275526	CTG 60MM HE M720	*3.75 LB
*2	*Part	*11751196	--FIN (AL ALLOY)	*0.00
*3	*Bulk item	*	----PETTMAN CEMENT	
*4	*Bulk item	*	----SHELLAC (ALT)	
*5	*Bulk item	*	----GRAPHITE (ALT)	
*6	*Part	*11751196	--FIN (AL ALLOY) (ALT)	*0.00
*7	*Bulk item	*	----PETTMAN CEMENT	
*8	*Bulk item	*	----SHELLAC (ALT)	
*9	*Bulk item	*	----GRAPHITE (ALT)	
*10	*Part	*11751152	--RING OBTURATING (PLASTIC)	*0.00
*11	*Part	*9310754	--LABEL WARNING (TAPE PRESSURE SENSITIVE)	*0.00
*12	*Bulk item	*	----INK PRINTERS	
*13	*Component	*9280553	--CTG IGN LOADING ASSY M702	*0.00
*14	*Part	*9321224	----PLUG FIRING (AL ALLOY)	*0.00
*15	*Bulk item	*	------CHROMATE COATING	
*16	*Bulk item	*	------LACQUER CELL NITRATE	
*17	*Part	*9321224	----PLUG FIRING (AL ALLOY) (ALT)	*0.00
*18	*Bulk item	*	------CHROMATE COATING	
*19	*Bulk item	*	------LACQUER CELL NITRATE	
*20	*Part	*9321225	----SUPPORT (AL ALLOY)	*0.00
*21	*Bulk item	*	------LACQUER CELL NITRATE	
*22	*Part	*9321225	----SUPPORT (AL ALLOY) (ALT)	*0.00
*23	*Bulk item	*	------LACQUER CELL NITRATE	
*24	*Part	*9285481	----HEAD (AL ALLOY)	*0.00
*25	*Bulk item	*	------CHROMATE COATING	
*26	*Bulk item	*	------ADHESIVE RTV (9233455)	
*27	*Part	*9285481	----HEAD (AL ALLOY) (ALT)	*0.00
*28	*Bulk item	*	------CHROMATE COATING	
*29	*Bulk item	*	------ADHESIVE RTV (9233455)	
*30	*Part	*9280530	----TUBE (CTG PAPER)	*0.00

*31	*Bulk item	*	------ADHESIVE	
*32	*Part	*9280532	----CAP (AL ALLOY)	*0.00
*33	*Bulk item	*	------CHROMATE COATING	
*34	*Bulk item	*	------ADHESIVE RTV (9233455)	
*35	*Part	*9280532	----CAP (AL ALLOY) (ALT)	*0.00
*36	*Bulk item	*	------CHROMATE COATING	
*37	*Bulk item	*	------ADHESIVE RTV (9233455)	
*38	*Part	*	----PROP M9 (PROP M9)	*52.00 GR
*39	*Compound	*	------NC (57.75%)	
*40	*Compound	*	------NITROGLYCERIN (40.00%)	
*41	*Compound	*	------K NITRATE (1.50%)	
*42	*Compound	*	------DIPHENYLAMINE (0.75%)	
*43	*Component	*9280529	----FLASH TUBE LOADING ASSY	*0.00
*44	*Part	*12561290	------PELLET (BLACK PWDR CL 7)	*3.12 GR
*45	*Compound	*	--------K NITRATE (74.00%)	
*46	*Compound	*	--------S (10.40%)	
*47	*Compound	*	--------CHARCOAL (15.60%)	
*48	*Component	*12561286	------FLASH TUBE ASSY	*0.00
*49	*Part	*9280533	--------TUBE FLASH (AL ALLOY)	*0.00
*50	*Bulk item	*	ADHESIVE CELL NITRATE	
*51	Part	12561289	TUBING HEAT SHRINKABLE (IRRADIATED POLYOLEFIN)	*0.00
*52	*Part	MS9390-304	--------PIN (STEEL)	*1.28 GR
*53	*Part	*9297909	--------PIN (AL ALLOY) (ALT)	*0.00
*54	*Component	*8840536	----PRIMER PERC M35 ASSY	*0.00
*55	*Part	*8840537	------CUP (CU ALLOY)	*0.00
*56	*Bulk item	*	--------LACQUER CELL NITRATE	
*57	*Part	*8840534	------COVER (PAPER SEALING)	*0.00
*58	*Bulk item	*	--------ETHYL ALCOHOL	
*59	*Bulk item	*	--------ACETONE (ALT)	
*60	*Part	*8840535	------ANVIL (CU ALLOY)	*0.00
*61	*Part	*	------PEP (PRIMER MIX #70)	*0.37 GR
*62	*Compound	*	--------PB THIOCYANATE (25.00%)	
*63	*Compound	*	--------K CHLORATE (53.00%)	
*64	*Compound	*	--------SB SULFIDE (17.00%)	
*65	*Compound	*	--------TNT (5.00%)	
*66	*Part	*	------PEP (PRIMER MIX #70 (G/G)) (ALT)	*0.48 GR
*67	*Compound	*	--------PB THIOCYANATE (22.50%)	
*68	*Compound	*	--------K CHLORATE (50.50%)	
*69	*Compound	*	--------SB SULFIDE (14.50%)	
*70	*Compound	*	--------TNT (2.50%)	

*71	*Compound	*	--------GROUND GLASS (10.00%)	
*72	*Component	*9236378-2	--BODY LOADING ASSY	*0.00
*73	*Part	*	----PEP (COMP B)	*0.79 LB
*74	*Compound	*	------RDX (59.50%)	
*75	*Compound	*	------TNT (39.50%)	
*76	*Compound	*	------WAX (1.00%)	
*77	*Component	*11751150	----METAL PARTS	*0.00
*78	*Part	*11751151	------BODY (STEEL)	*2.11 LB
*79	*Bulk item	*	--------SHELLAC (ALT)	
*80	*Bulk item	*	--------GRAPHITE (ALT)	
*81	*Bulk item	*	--------ZN PHOSPHATE	
*82	*Bulk item	*	--------ZN CHROMATE (ALT)	
*83	*Bulk item	*	--------PRIMER	
*84	*Bulk item	*	--------ENAMEL GRN	
*85	*Bulk item	*	--------LACQUER GRN (ALT)	
*86	*Bulk item	*	--------PETTMAN CEMENT	
*87	*Component	*9312698	--CHG PROP M204	*0.00
*88	*Part	*	----PROP M10 (PROP M10)	*125.00 GR
*89	*Compound	*	------DINITROTOLUENE (9.90%)	
*90	*Compound	*	------DIETHYLPHTHALATE (4.90%)	
*91	*Compound	*	------DIPHENYLAMINE (1.00%)	
*92	*Compound	*	------NC (N 13.15%) (84.20%)	
*93	*Component	*9312697	----CONTAINER ASSY SLURRY	*0.00
*94	*Part	*9312699	CONTAINER TOP SLURRY (COMP NC PAPER)	*1.28 GM
*95	*Compound	*	--------NC (71.00%)	
*96	*Compound	*	--------DIPHENYLAMINE (1.00%)	
*97	*Compound	*	--------RESIN & ADDITIVES (7.00%)	
*98	*Compound	*	--------FIBER CRAFT (10.75%)	
*99	*Compound	*	--------FIBER ACRYLIC (3.75%)	
*100	*Compound	*	--------FIBER POLYESTER (6.50%)	
*101	*Bulk item	*	--------ACETONE	
*102	*Bulk item	*	--------STENCIL INK BLK	
*103	*Bulk item	*	--------SILICONE (9279012)	
*104	*Bulk item	*	--------H-HEXANE (9279087)	
*105	*Bulk item	*	--------ADHESIVE MR23 (9255426) (ALT)	
*106	*Part	*9312700	CONTAINER BOTTOM SLURRY (COMP NC PAPER)	*1.28 GM
*107	*Compound	*	--------NC (71.00%)	
*108	*Compound	*	--------DIPHENYLAMINE (1.00%)	
*109	*Compound	*	--------RESIN & ADDITIVES (7.00%)	
*110	*Compound	*	--------FIBER CRAFT (10.75%)	

*111	*Compound	*	--------FIBER ACRYLIC (3.75%)	
*112	*Compound	*	--------FIBER POLYESTER (6.50%)	
*113	*Bulk item	*	--------ACETONE	
*114	*Bulk item	*	--------SILICONE (9279012)	
*115	*Bulk item	*	--------H-HEXANE (9279087)	
*116	*Bulk item	*	--------STENCIL INK BLK	
*117	*Bulk item	*	--------ADHESIVE MR23 (9255426) (ALT)	
*118	*Part	*9312707	------CLOSURE (COMP NC PAPER)	*1.10 GR
*119	*Compound	*	--------NC (71.00%)	
*120	*Compound	*	--------DIPHENYLAMINE (1.00%)	
*121	*Compound	*	--------RESIN & ADDITIVES (7.00%)	
*122	*Compound	*	--------FIBER CRAFT (10.75%)	
*123	*Compound	*	--------FIBER ACRYLIC (3.75%)	
*124	*Compound	*	--------FIBER POLYESTER (6.50%)	
*125	*Bulk item	*	--------ACETONE	
*126	*Bulk item	*	--------H-HEXANE (9279087)	
*127	*Bulk item	*	--------SILICONE (9279012)	
*128	*Component	*9345311	----CONTAINER ASSY PAPER (ALT)	*0.00
*129	*Part	*9345313	------CONTAINER TOP PAPER (COMP NC PAPER)	*1.28 GM
*130	*Compound	*	--------NC (78.00%)	
*131	*Compound	*	--------DIPHENYLAMINE (1.00%)	
*132	*Compound	*	--------RESIN & ADDITIVES (7.00%)	
*133	*Compound	*	--------FIBER CRAFT (3.75%)	
*134	*Compound	*	--------FIBER ACRYLIC (3.75%)	
*135	*Compound	*	--------FIBER POLYESTER (6.50%)	
*136	*Bulk item	*	--------ACETONE	
*137	*Bulk item	*	--------H-HEXANE (9279087)	
*138	*Bulk item	*	--------SILICONE (9279012)	
*139	*Bulk item	*	--------STENCIL INK BLK	
*140	*Bulk item	*	--------ADHESIVE MR23 (9255426) (ALT)	
*141	*Bulk item	*	--------ADHESIVE CELL NITRATE (ALT)	
*142	*Part	*9345312	CONTAINER BOTTOM PAPER (COMP NC PAPER)	*1.28 GM
*143	*Compound	*	--------NC (78.00%)	
*144	*Compound	*	--------DIPHENYLAMINE (1.00%)	
*145	*Compound	*	--------RESIN & ADDITIVES (7.00%)	
*146	*Compound	*	--------FIBER CRAFT (3.75%)	
*147	*Compound	*	--------FIBER ACRYLIC (3.75%)	
*148	*Compound	*	--------FIBER POLYESTER (6.50%)	
*149	*Bulk item	*	--------ACETONE	
*150	*Bulk item	*	--------ADHESIVE CELL NITRATE (ALT)	

*151	*Bulk item	*	--------ADHESIVE MR23 (9255426) (ALT)	
*152	*Bulk item	*	--------H-HEXANE (9279087)	
*153	*Bulk item	*	--------SILICONE (9279012)	
*154	*Bulk item	*	--------STENCIL INK BLK	
*155	*Part	*9312786	------CLOSURE (COMP NC PAPER)	*1.10 GR
*156	*Compound	*	--------NC (71.00%)	
*157	*Compound	*	--------DIPHENYLAMINE (1.00%)	
*158	*Compound	*	--------RESIN & ADDITIVES (7.00%)	
*159	*Compound	*	--------FIBER CRAFT (10.75%)	
*160	*Compound	*	--------FIBER ACRYLIC (3.75%)	
*161	*Compound	*	--------FIBER POLYESTER (6.50%)	
*162	*Bulk item	*	--------ACETONE	
*163	*Bulk item	*	--------H-HEXANE (9279087)	
*164	*Bulk item	*	--------SILICONE (9279012)	
*165	*Bulk item	*	--------ADHESIVE CELL NITRATE (ALT)	
*166	*Bulk item	*	--------ADHESIVE MR23 (9255426) (ALT)	
*167	*Component	*11723100	--FUZE MULTI-OPTION M734 LOADED ASSY	*0.50 LB
*168	*Part	*11722522	----PELLET BOOSTER (COMP A5 (RDX 98.5%))	*8.00 GM
*169	*Compound	*	------RDX (98.50%)	
*170	*Compound	*	------STEARIC ACID (1.50%)	
*171	*Bulk item	*	------ADHESIVE SILICONE RTV	
*172	*Bulk item	*	------ADHESIVE SILICONE RTV (ALT)	
*173	*Part	*11722975	----CAP BOOSTER (AL ALLOY)	*0.00
*174	*Bulk item	*	------CHROMATE COATING	
*175	*Bulk item	*	------ADHESIVE SILICONE RTV	
*176	*Bulk item	*	------ADHESIVE SILICONE RTV (ALT)	
*177	*Part	*11722974	----PAD BOOSTER (WOOL FELT)	*0.00
*178	*Bulk item	*	------ADHESIVE SILICONE RTV	
*179	*Bulk item	*	------ADHESIVE SILICONE RTV (ALT)	
*180	*Component	*11723137	----LEAD CHG	*0.00
*181	*Part	*11723116	------LEAD CUP (AL ALLOY)	*0.00
*182	*Bulk item	*	--------CHROMATE COATING	
*183	*Part	*	------PEP (PBXN-5)	152.00 MG
*184	*Compound	*	--------HMX (95.00%)	
*185	*Compound	*	--------BINDER (5.00%)	
*186	*Component	*11723071	FUZE MULTI-OPTION M734 LESS BOOSTER&LEAD	*0.00
*187	*Part	*11722603	INJECTION MOLDING COMPOUND (SURLYN 8660)	*0.00
*188	*Bulk item	*	--------MOLD RELEASE (11722937)	
*189	*Component	*11723070	------ELECTRONIC HEAD ASSY	*0.00
*190	*Part	*11736666	--------SPRING GROUNDING (CU-BE ALLOY)	*0.00

*191	*Bulk item	*	SN COATING	
*192	*Part	*11736656	--------FLEX CABLE (KAPTON CU/PLASTIC)	*0.00
*193	*Bulk item	*	NI PLATING	
*194	*Bulk item	*	AU PLATING	
*195	*Bulk item	*	AU PLATING (ALT)	
*196	*Bulk item	*	SN-PB SOLDER	
*197	*Bulk item	*	SN-PB SOLDER (ALT)	
*198	*Bulk item	*	ADHESIVE TAPE (11741884)	
*199	*Bulk item	*	ADHESIVE TAPE (11741884) (ALT)	
*200	*Part	*11736656	FLEX CABLE (KAPTON CU/PLASTIC) (ALT)	*0.00
*201	*Bulk item	*	NI PLATING	
*202	*Bulk item	*	AU PLATING	
*203	*Bulk item	*	AU PLATING (ALT)	
*204	*Bulk item	*	SN-PB SOLDER	
*205	*Bulk item	*	SN-PB SOLDER (ALT)	
*206	*Bulk item	*	ADHESIVE TAPE (11741884)	
*207	*Bulk item	*	ADHESIVE TAPE (11741884) (ALT)	
*208	*Component	*11723094	--------ALTERNATOR & SWITCH PLATE ASSY	*0.00
*209	*Part	*11723038	PLATE SWITCH (STAINLESS STEEL)	*0.00
*210	*Part	*11723038	PLATE SWITCH (STAINLESS STEEL) (ALT)	*0.00
*211	*Component	*11722760	ALTERNATOR TURBINE (AIR DRIVEN)	*0.00
*212	*Part	*11722762	--TURBINE 10-BLADE (NYLON)	*0.00
*213	*Component	*11722766	--COIL ASSY	*0.00
*214	*Part	*11722766*1	----WIRE MAGNET (CU WIRE)	*0.00
*215	*Bulk item	*	-SN-PB SOLDER	
*216	*Bulk item	*	-SN-PB SOLDER (ALT)	
*217	*Bulk item	*	-INSULATING TAK PAK (11723141)	
*218	*Component	*11722765	----BOBBIN & CONTAC ASSY	*0.00
*219	*Part	*11722763	-BOBBIN (ACETAL MOLDING)	*0.00
*220	*Part	*11722764	-CONTACT (BRASS)	*0.00
*221	*Bulk item	*	---SN COATING	
*222	*Bulk item	*	---SN-PB SOLDER	
*223	*Bulk item	*	---SN-PB SOLDER (ALT)	
*224	*Bulk item	*	INSULATING TAK PAK (11723141)	
*225	*Part	*11722764	-CONTACT (BRASS) (ALT)	*0.00
*226	*Bulk item	*	---SN COATING	
*227	*Bulk item	*	---SN-PB SOLDER	
*228	*Bulk item	*	---SN-PB SOLDER (ALT)	
*229	*Bulk item	*	INSULATING TAK PAK (11723141)	
*230	*Component	*11730640	--MAGNET-SHAFT WASHER ASSY	*0.00

*231	*Part	*11730641	SHAFT (11723134) (STAINLESS STEEL)	*0.00
*232	*Bulk item	*	-PASSIVATE TREATMENT	
*233	*Bulk item	*	-NYLON COATING	
*234	*Bulk item	*	LUBRICANT MIXTURE (11723115)	
*235	*Part	*11730641	SHAFT (11723134) (STAINLESS STEEL) (ALT)	*0.00
*236	*Bulk item	*	-PASSIVATE TREATMENT	
*237	*Bulk item	*	-NYLON COATING	
*238	*Bulk item	*	LUBRICANT MIXTURE (11723115)	
*239	*Part	*11722761	----MAGNET (AL-NI-CO-Z ALLOY)	*0.00
*240	*Bulk item	*	-NYLON COATING	
*241	*Component	*11723110	--HOUSING & BEARING ASSY	*0.00
*242	*Part	*11730642	----HOUSING (NI ALLOY)	*0.00
*243	*Component	*11730638	----BEARING ASSY	*0.00
*244	*Part	*11730638*1	-RACE (STAINLESS STEEL)	*0.00
*245	*Bulk item	*	LUBRICANT MIXTURE (11723115)	
*246	*Part	*11730638*2	-BALLS (NI ALLOY)	*0.00
*247	*Bulk item	*	LUBRICANT MIXTURE (11723115)	
*248	*Component	*11723111	--END PLATE & BEARING ASSY	*0.00
*249	*Part	*11730643	----END PLATE (NI ALLOY)	*0.00
*250	*Component	*11730638	----BEARING ASSY	*0.00
*251	*Part	*11730638*1	-RACE (STAINLESS STEEL)	*0.00
*252	*Bulk item	*	LUBRICANT MIXTURE (11723115)	
*253	*Part	*11730638*2	-BALLS (NI ALLOY)	*0.00
*254	*Bulk item	*	LUBRICANT MIXTURE (11723115)	
*255	*Component	*11744334	ALTERNATOR ASSY ** (ALT)	*0.00
*256	*Component	*11723095	--------ELECTRONIC ASSY	*0.00
*257	*Part	*11723027	DETENT SELECTOR (STAINLESS STEEL)	*0.00
*258	*Bulk item	*	--POTTING FOAM (11722607)	
*259	*Component	*11736653	UNPOTTED ELECTRONIC ASSY	*0.00
*260	*Part	*11723020	--NOSE OGIVE (PLASTIC)	*0.00
*261	*Bulk item	*	----POTTING FOAM (11722607)	
*262	*Part	*11723020	--NOSE OGIVE (PLASTIC) (ALT)	*0.00
*263	*Bulk item	*	----POTTING FOAM (11722607)	
*264	*Part	*11723020	--NOSE OGIVE (PLASTIC) (ALT)	*0.00
*265	*Bulk item	*	----POTTING FOAM (11722607)	
*266	*Part	*11722603	INJECTION MOLDING COMPOUND (SURLYN 8660)	*0.00
*267	*Bulk item	*	----MOLD RELEASE (11722937)	
*268	*Component	*11736652	UNPOTTED ELECTRONIC SUB ASSY	*0.00
*269	*Part	*11736654	----OGIVE BASE (AL ALLOY)	*0.00
*270	*Bulk item	*	-STENCIL INK	

*271	*Bulk item	*	-GRADUATION FILLER (ALT)	
*272	*Bulk item	*	-NI COATING	
*273	*Bulk item	*	-SN-PB SOLDER	
*274	*Bulk item	*	-SN-PB SOLDER (ALT)	
*275	*Part	*11736654	----OGIVE BASE (AL ALLOY) (ALT)	*0.00
*276	*Bulk item	*	-STENCIL INK	
*277	*Bulk item	*	-GRADUATION FILLER (ALT)	
*278	*Bulk item	*	-NI COATING	
*279	*Bulk item	*	-SN-PB SOLDER	
*280	*Bulk item	*	-SN-PB SOLDER (ALT)	
*281	*Part	*11736654	----OGIVE BASE (AL ALLOY) (ALT)	*0.00
*282	*Bulk item	*	-STENCIL INK	
*283	*Bulk item	*	-GRADUATION FILLER (ALT)	
*284	*Bulk item	*	-NI COATING	
*285	*Bulk item	*	-SN-PB SOLDER	
*286	*Bulk item	*	-SN-PB SOLDER (ALT)	
*287	*Component	*11736651	----OSCILLATOR AMPLIFIER ASSY	*0.00
*288	*Part	*11736664	-POST CENTER (PLASTIC)	*0.00
*289	*Part	*11736664	POST CENTER (PLASTIC) (ALT)	*0.00
*290	*Part	*11736664	POST CENTER (PLASTIC) (ALT)	*0.00
*291	*Component	*11736663	-OSCILLATOR ASSY	*0.00
*292	*Part	*11723021	CONE OGIVE (POLYETHYLENE PLASTIC)	*0.00
*293	*Part	*11723021	CONE OGIVE (PLASTIC) (ALT)	*0.00
*294	*Part	*11723021*1	ELECTRODES (STAINLESS STEEL)	*0.00
*295	*Part	*11722901	---STRAP (CU ALLOY)	*0.00
*296	*Bulk item	*	AG COATING	
*297	*Bulk item	*	SN-PB SOLDER	
*298	*Bulk item	*	SN-PB SOLDER (ALT)	
*299	*Bulk item	*	POTTING FOAM (11722607)	
*300	*Component	*11736662	---OSCILLATOR BOARD ASSY	*0.00
*301	*Part	*11741869	DIP CONNECTOR (PHOSPHOR BRONZE)	*0.00
*302	*Bulk item	*	--SN-PB SOLDER	
*303	*Bulk item	*	--SN-PB SOLDER (ALT)	
*304	*Part	*11741869	DIP CONNECTOR (SOLDER) (ALT)	*0.00
*305	*Bulk item	*	--SN-PB SOLDER	
*306	*Bulk item	*	--SN-PB SOLDER (ALT)	
*307	*Part	*11722536	DIODE (COMMERCIAL)	*0.00
*308	*Bulk item	*	--SN-PB SOLDER	
*309	*Bulk item	*	--SN-PB SOLDER (ALT)	
*310	*Part	*11741883	CAPACITOR CHIP (CERAMIC)	*0.00

*311	*Bulk item	*	--SN-PB SOLDER	
*312	*Bulk item	*	--SN-PB SOLDER (ALT)	
*313	*Part	*11720701-2	CAPACITOR CERAMIC CHIP (COMMERCIAL) (ALT)	*0.00
*314	*Bulk item	*	--SN-PB SOLDER	
*315	*Bulk item	*	--SN-PB SOLDER (ALT)	
*316	*Bulk item	*	EPOXY CONDUCTIVE (11723101)	
*317	*Bulk item	*	COATING COMPOUND (11723057)	
*318	*Bulk item	*	INSULATING COMPOUND	
*319	*Part	*11722528	CHOKE BRIDGE (CU ALLOY)	*0.00
*320	*Bulk item	*	--AG COATING	
*321	*Bulk item	*	--SN-PB SOLDER	
*322	*Bulk item	*	--SN-PB SOLDER (ALT)	
*323	*Part	*11722528	CHOKE BRIDGE (CU ALLOY) (ALT)	*0.00
*324	*Bulk item	*	--AG COATING	
*325	*Bulk item	*	--SN-PB SOLDER	
*326	*Bulk item	*	--SN-PB SOLDER (ALT)	
*327	*Part	*11736647	TRANSISTOR PNP (TRANSISTOR)	*0.00
*328	*Bulk item	*	--SN-PB SOLDER	
*329	*Bulk item	*	--SN-PB SOLDER (ALT)	
*330	*Part	*11736646	TRANSISTOR NPN (COMMERCIAL)	*0.00
*331	*Bulk item	*	--SN-PB SOLDER	
*332	*Bulk item	*	--SN-PB SOLDER (ALT)	
*333	*Component	*11736661	OSCILLATOR BOARD PATTERN ASSY	*0.00
*334	*Part	*11722920	SUBSTRATE OSCILLATOR BOARD (ALUMINA)	*0.00
*335	*Bulk item	*	SOLDER CREAM (11723084)	
*336	*Bulk item	*	INK CONDUCTOR (11742888)	
*337	*Bulk item	*	----SN-PB SOLDER	
*338	*Bulk item	*	SN-PB SOLDER (ALT)	
*339	*Part	*11736661*1	RESISTOR (COMMERCIAL)	*0.00
*340	*Bulk item	*	----SN-PB SOLDER	
*341	*Bulk item	*	SN-PB SOLDER (ALT)	
*342	*Part	*11736661*2	RESISTOR (COMMERCIAL)	*0.00
*343	*Bulk item	*	----SN-PB SOLDER	
*344	*Bulk item	*	SN-PB SOLDER (ALT)	
*345	*Part	*11736661*3	RESISTOR (COMMERCIAL)	*0.00
*346	*Bulk item	*	----SN-PB SOLDER	
*347	*Bulk item	*	SN-PB SOLDER (ALT)	
*348	*Component	*11736657	-SHIELDED AMPLIFIER ASSY	*0.00
*349	*Part	*11736656	FLEX CABLE (KAPTON CU/PLASTIC)	*0.00
*350	*Bulk item	*	NI PLATING	

*351	*Bulk item	*	AU PLATING	
*352	*Bulk item	*	AU PLATING (ALT)	
*353	*Bulk item	*	SN-PB SOLDER	
*354	*Bulk item	*	SN-PB SOLDER (ALT)	
*355	*Bulk item	*	ADHESIVE TAPE (11741884)	
*356	*Bulk item	*	ADHESIVE TAPE (11741884) (ALT)	
*357	*Part	*11736656	FLEX CABLE (KAPTON CU/PLASTIC) (ALT)	*0.00
*358	*Bulk item	*	NI PLATING	
*359	*Bulk item	*	AU PLATING	
*360	*Bulk item	*	AU PLATING (ALT)	
*361	*Bulk item	*	SN-PB SOLDER	
*362	*Bulk item	*	SN-PB SOLDER (ALT)	
*363	*Bulk item	*	ADHESIVE TAPE (11741884)	
*364	*Bulk item	*	ADHESIVE TAPE (11741884) (ALT)	
*365	*Part	*11736655	SUPPORT RING (POLYETHYLENE PLASTIC)	*0.00
*366	Part	11736655	SUPPORT RING (POLYCARBONATE (11723053)) (ALT)	*0.00
*367	*Part	*11736649	---COVER SHIELD (STEEL)	*0.00
*368	*Bulk item	*	SN-SB COATING	
*369	*Bulk item	*	SN-SB COATING (ALT)	
*370	*Bulk item	*	SN-PB SOLDER	
*371	*Bulk item	*	SN-PB SOLDER (ALT)	
*372	*Bulk item	*	POTTING FOAM (11722607)	
*373	*Part	*11736658	WASHER POLYURETHANE (FOAM PORON)	*0.00
*374	*Part	*11736650	---LOWER SHIELD (STEEL)	*0.00
*375	*Bulk item	*	SN-SB COATING	
*376	*Bulk item	*	SN-SB COATING (ALT)	
*377	*Bulk item	*	SN-PB SOLDER	
*378	*Bulk item	*	SN-PB SOLDER (ALT)	
*379	*Part	*11736667	WASHER SUPPORT (FOAM PORON)	*0.00
*380	*Component	*11723050	AMPLIFIER HYBRID CIRCUIT M734 FUZE	*0.00
*381	*Part	*11723049	SUBSTRATE AMPLIFIER (ALUMINA)	*0.00
*382	*Bulk item	*	--STENCIL INK	
*383	*Bulk item	*	COATING COMPOUND (11723057)	
*384	*Bulk item	*	INSULATING COMPOUND	
*385	*Bulk item	*	AU CONDUCTOR INK (11723085-2)	
*386	*Bulk item	*	--PT PD AG (11723085-3)	
*387	*Bulk item	*	OVERGLAZE INK (11744242)	
*388	*Bulk item	*	RESISTOR INK (11723073-3) (ALT)	
*389	*Part	*11723130	EPOXY LEAD STAKE (COMMERCIAL)	*0.00
*390	*Bulk item	*	COATING COMPOUND (11723057)	

*391	*Bulk item	*	INSULATING COMPOUND	
*392	*Part	*11720701-3	CAPACITOR CERAMIC CHIP (COMMERCIAL)	*0.00
*393	*Bulk item	*	--SN-PB SOLDER	
*394	*Bulk item	*	--SN-PB SOLDER (ALT)	
*395	*Bulk item	*	COATING COMPOUND (11723057)	
*396	*Bulk item	*	INSULATING COMPOUND	
*397	*Part	*11720701-4	CAPACITOR CERAMIC CHIP (COMMERCIAL)	*0.00
*398	*Bulk item	*	--SN-PB SOLDER	
*399	*Bulk item	*	--SN-PB SOLDER (ALT)	
*400	*Bulk item	*	COATING COMPOUND (11723057)	
*401	*Bulk item	*	INSULATING COMPOUND	
*402	*Part	*11720701-1	CAPACITOR CERAMIC CHIP (COMMERCIAL)	*0.00
*403	*Bulk item	*	--SN-PB SOLDER	
*404	*Bulk item	*	--SN-PB SOLDER (ALT)	
*405	*Bulk item	*	COATING COMPOUND (11723057)	
*406	*Bulk item	*	INSULATING COMPOUND	
*407	*Part	*11720701-5	CAPACITOR CERAMIC CHIP (COMMERCIAL)	*0.00
*408	*Bulk item	*	--SN-PB SOLDER	
*409	*Bulk item	*	--SN-PB SOLDER (ALT)	
*410	*Bulk item	*	COATING COMPOUND (11723057)	
*411	*Bulk item	*	INSULATING COMPOUND	
*412	*Part	*11781882	CAPACITOR TANTALUM CHIP (COMMERCIAL)	*0.00
*413	*Bulk item	*	--SN-PB SOLDER	
*414	*Bulk item	*	--SN-PB SOLDER (ALT)	
*415	*Bulk item	*	COATING COMPOUND (11723057)	
*416	*Bulk item	*	INSULATING COMPOUND	
*417	*Part	*11723060-1	CAPACITOR TANTALUM CHIP (COMMERCIAL)	*0.00
*418	*Bulk item	*	--SN-PB SOLDER	
*419	*Bulk item	*	--SN-PB SOLDER (ALT)	
*420	*Bulk item	*	COATING COMPOUND (11723057)	
*421	*Bulk item	*	INSULATING COMPOUND	
*422	*Part	*11723060-2	CAPACITOR TANTALUM CHIP (COMMERCIAL)	*0.00
*423	*Bulk item	*	--SN-PB SOLDER	
*424	*Bulk item	*	--SN-PB SOLDER (ALT)	
*425	*Bulk item	*	COATING COMPOUND (11723057)	
*426	*Bulk item	*	INSULATING COMPOUND	
*427	*Part	*11722555	CHIP DIODE SWITCHING (COMMERCIAL)	*0.00
*428	*Bulk item	*	--SN-PB SOLDER	
*429	*Bulk item	*	--SN-PB SOLDER (ALT)	
*430	*Bulk item	*	COATING COMPOUND (11723057)	

*431	*Bulk item	*	INSULATING COMPOUND	
*432	*Part	*11723055	CHIP DIODE QUAD BRIDGE (COMMERCIAL)	*0.00
*433	*Bulk item	*	--SN-PB SOLDER	
*434	*Bulk item	*	--SN-PB SOLDER (ALT)	
*435	*Bulk item	*	--COATING COMPOUND (11723057)	
*436	*Bulk item	*	--INSULATING COMPOUND	
*437	*Part	*11722557-1	CHIP INTEGRATED CIRCUIT (COMMERCIAL)	*0.00
*438	*Bulk item	*	--SN-PB SOLDER	
*439	*Bulk item	*	--SN-PB SOLDER (ALT)	
*440	*Bulk item	*	--COATING COMPOUND (11723057)	
*441	*Bulk item	*	--INSULATING COMPOUND	
*442	*Part	*11722557-2	CHIP INTEGRATED CIRCUIT (COMMERCIAL)	*0.00
*443	*Bulk item	*	--SN-PB SOLDER	
*444	*Bulk item	*	--SN-PB SOLDER (ALT)	
*445	*Bulk item	*	--COATING COMPOUND (11723057)	
*446	*Bulk item	*	--INSULATING COMPOUND	
*447	*Part	*11722907	**DisplayText cannot span more than one line!**	*0.00
*448	*Bulk item	*	--SN-PB SOLDER	
*449	*Bulk item	*	--SN-PB SOLDER (ALT)	
*450	*Bulk item	*	--COATING COMPOUND (11723057)	
*451	*Bulk item	*	--INSULATING COMPOUND	
*452	*Part	*11723059	CHIP TRANSISTOR NPN (COMMERCIAL)	*0.00
*453	*Bulk item	*	--SN-PB SOLDER	
*454	*Bulk item	*	--SN-PB SOLDER (ALT)	
*455	*Bulk item	*	--COATING COMPOUND (11723057)	
*456	*Bulk item	*	--INSULATING COMPOUND	
*457	*Part	*11722574	CHIP DARLINGTON NPN (COMMERCIAL)	*0.00
*458	*Bulk item	*	--SN-PB SOLDER	
*459	*Bulk item	*	--SN-PB SOLDER (ALT)	
*460	*Bulk item	*	--COATING COMPOUND (11723057)	
*461	*Bulk item	*	--INSULATING COMPOUND	
*462	*Part	*11723056-1	CHIP DIODE ZENER (COMMERCIAL)	*0.00
*463	*Bulk item	*	--SN-PB SOLDER	
*464	*Bulk item	*	--SN-PB SOLDER (ALT)	
*465	*Bulk item	*	--COATING COMPOUND (11723057)	
*466	*Bulk item	*	--INSULATING COMPOUND	
*467	*Part	*11723056-2	CHIP DIODE ZENER (COMMERCIAL)	*0.00
*468	*Bulk item	*	--SN-PB SOLDER	
*469	*Bulk item	*	--SN-PB SOLDER (ALT)	
*470	*Bulk item	*	--COATING COMPOUND (11723057)	

*471	*Bulk item	*	--INSULATING COMPOUND	
*472	*Part	*11722557-3	CHIP INTEGRATED CIRCUIT (COMMERCIAL)	*0.00
*473	*Bulk item	*	--SN-PB SOLDER	
*474	*Bulk item	*	--SN-PB SOLDER (ALT)	
*475	*Bulk item	*	--INSULATING COMPOUND	
*476	*Bulk item	*	--COATING COMPOUND (11723057)	
*477	*Part	*11723058	DIP CLIP AMPLIFIER (BRASS)	*0.00
*478	*Bulk item	*	--SN-PB SOLDER	
*479	*Bulk item	*	--SN-PB SOLDER (ALT)	
*480	*Part	*11723058	DIP CLIP AMPLIFIER (BRASS) (ALT)	*0.00
*481	*Bulk item	*	--SN-PB SOLDER	
*482	*Bulk item	*	--SN-PB SOLDER (ALT)	
*483	*Part	*11720701-2	CAPACITOR CERAMIC CHIP (COMMERCIAL)	*0.00
*484	*Bulk item	*	--SN-PB SOLDER	
*485	*Bulk item	*	--SN-PB SOLDER (ALT)	
*486	*Bulk item	*	--EPOXY CONDUCTIVE (11723101)	
*487	*Bulk item	*	--COATING COMPOUND (11723057)	
*488	*Bulk item	*	--INSULATING COMPOUND	
*489	*Component	*11722971	IMPACT SWITCH HYBRID CIRCUIT	*0.00
*490	*Part	*11718421-2	--CUP COVER (STAINLESS STEEL)	*0.00
*491	*Bulk item	*	----CU COATING	
*492	*Bulk item	*	----SN-PB PLATING (ALT)	
*493	*Part	*11718420-1	--INSULATION (PLASTIC)	*0.00
*494	*Part	*11718286	--SPRING (STAINLESS STEEL)	*0.00
*495	*Part	*11718287	--CONTACT (STAINLESS STEEL)	*0.00
*496	*Part	*11718419-2	--CUP BODY (STAINLESS STEEL)	*0.00
*497	*Bulk item	*	----NI PLATING	
*498	*Bulk item	*	----AU PLATING	
*499	*Bulk item	*	----SN-PB SOLDER	
*500	*Bulk item	*	----SN-PB SOLDER (ALT)	
*501	*Part	*11718420-2	--INSULATION (PLASTIC)	*0.00
*502	*Part	*11722972	--CONTACT HEX (BRASS)	*0.00
*503	*Bulk item	*	----CU COATING	
*504	*Bulk item	*	----SN-PB PLATING	
*505	*Part	*11718421-2	--CUP COVER (STAINLESS STEEL) (ALT)	*0.00
*506	*Bulk item	*	----CU COATING	
*507	*Bulk item	*	----AU PLATING	
*508	Component	11744254	AMPLIFIER HYBRID CIRCUIT M734 FUZE ASSY (ALT)	*0.00
*509	*Part	*11723130	EPOXY LEAD STAKE (COMMERCIAL)	*0.00
*510	*Bulk item	*	--COATING COMPOUND (11723057)	

*511	*Bulk item	*	--INSULATING COMPOUND	
*512	*Part	*11723058	DIP CLIP AMPLIFIER (BRASS)	*0.00
*513	*Bulk item	*	--SN-PB SOLDER	
*514	*Bulk item	*	--SN-PB SOLDER (ALT)	
*515	*Part	*11723058	DIP CLIP AMPLIFIER (BRASS) (ALT)	*0.00
*516	*Bulk item	*	--SN-PB SOLDER	
*517	*Bulk item	*	--SN-PB SOLDER (ALT)	
*518	*Part	*11723049	SUBSTRATE AMPLIFIER (ALUMINA) (ALT)	*0.00
*519	*Bulk item	*	--STENCIL INK	
*520	*Bulk item	*	--COATING COMPOUND (11723057)	
*521	*Bulk item	*	--INSULATING COMPOUND	
*522	*Bulk item	*	--AU CONDUCTOR INK (11723085-2)	
*523	*Bulk item	*	--PT PD AG (11723085-3)	
*524	*Bulk item	*	--OVERGLAZE INK (11744242)	
*525	*Bulk item	*	--RESISTOR INK (11723073-3) (ALT)	
*526	*Part	*11723049	SUBSTRATE AMPLIFIER (ALUMINA)	*0.00
*527	*Bulk item	*	--STENCIL INK	
*528	*Bulk item	*	--COATING COMPOUND (11723057)	
*529	*Bulk item	*	--INSULATING COMPOUND	
*530	*Bulk item	*	--AU CONDUCTOR INK (11723085-2)	
*531	*Bulk item	*	--PT PD AG (11723085-3)	
*532	*Bulk item	*	--OVERGLAZE INK (11744242)	
*533	*Bulk item	*	--RESISTOR INK (11723073-2)	
*534	*Part	*11744248-1	TANTALUM CHIP CAPACITORS (COMMERCIAL)	*0.00
*535	*Bulk item	*	--SN-PB SOLDER (ALT)	
*536	*Bulk item	*	--SOLDER CREAM (11723084)	
*537	*Bulk item	*	--EPOXY CONDUCTIVE (11723101)	
*538	*Bulk item	*	--SN-PB SOLDER	
*539	*Bulk item	*	--COATING COMPOUND (11723057)	
*540	*Bulk item	*	--INSULATING COMPOUND	
*541	*Part	*11744248-2	TANTALUM CHIP CAPACITORS (COMMERCIAL)	*0.00
*542	*Bulk item	*	--SN-PB SOLDER (ALT)	
*543	*Bulk item	*	--SOLDER CREAM (11723084)	
*544	*Bulk item	*	--EPOXY CONDUCTIVE (11723101)	
*545	*Bulk item	*	--SN-PB SOLDER	
*546	*Bulk item	*	--COATING COMPOUND (11723057)	
*547	*Bulk item	*	--INSULATING COMPOUND	
*548	*Part	*11744248-3	TANTALUM CHIP CAPACITORS (COMMERCIAL)	*0.00
*549	*Bulk item	*	--SN-PB SOLDER (ALT)	
*550	*Bulk item	*	--SOLDER CREAM (11723084)	

*551	*Bulk item	*	--EPOXY CONDUCTIVE (11723101)	
*552	*Bulk item	*	--SN-PB SOLDER	
*553	*Bulk item	*	--COATING COMPOUND (11723057)	
*554	*Bulk item	*	--INSULATING COMPOUND	
*555	*Part	*11744257	DIODE QUAD BRIDGE (COMMERCIAL)	*0.00
*556	*Bulk item	*	--SN-PB SOLDER (ALT)	
*557	*Bulk item	*	--SOLDER CREAM (11723084)	
*558	*Bulk item	*	--EPOXY CONDUCTIVE (11723101)	
*559	*Bulk item	*	--SN-PB SOLDER	
*560	*Bulk item	*	--COATING COMPOUND (11723057)	
*561	*Bulk item	*	--INSULATING COMPOUND	
*562	*Part	*11744251	CHIP CMOS IC (COMMERCIAL)	*0.00
*563	*Bulk item	*	--SOLDER CREAM (11723084)	
*564	*Bulk item	*	--EPOXY CONDUCTIVE (11723101)	
*565	*Bulk item	*	--SN-PB SOLDER	
*566	*Bulk item	*	--SN-PB SOLDER (ALT)	
*567	*Bulk item	*	--COATING COMPOUND (11723057)	
*568	*Bulk item	*	--INSULATING COMPOUND	
*569	*Part	*11744250	BIPOLAR INTEGRATED CHIP (COMMERCIAL)	*0.00
*570	*Bulk item	*	--SN-PB SOLDER	
*571	*Bulk item	*	--SOLDER CREAM (11723084)	
*572	*Bulk item	*	--EPOXY CONDUCTIVE (11723101)	
*573	*Bulk item	*	--SN-PB SOLDER (ALT)	
*574	*Bulk item	*	--COATING COMPOUND (11723057)	
*575	*Bulk item	*	--INSULATING COMPOUND	
*576	*Part	*11744252-1	CAPACITOR CERAMIC CHIP (CERAMIC)	*0.00
*577	*Bulk item	*	--SN-PB SOLDER (ALT)	
*578	*Bulk item	*	--SN-PB SOLDER	
*579	*Bulk item	*	--COATING COMPOUND (11723057)	
*580	*Bulk item	*	--INSULATING COMPOUND	
*581	*Bulk item	*	--SOLDER CREAM (11723084)	
*582	*Bulk item	*	--EPOXY CONDUCTIVE (11723101)	
*583	*Part	*11744252-2	CAPACITOR CERAMIC CHIP (CERAMIC)	*0.00
*584	*Bulk item	*	--SN-PB SOLDER (ALT)	
*585	*Bulk item	*	--COATING COMPOUND (11723057)	
*586	*Bulk item	*	--INSULATING COMPOUND	
*587	*Bulk item	*	--SN-PB SOLDER	
*588	*Bulk item	*	--SOLDER CREAM (11723084)	
*589	*Bulk item	*	--EPOXY CONDUCTIVE (11723101)	
*590	*Part	*11744252-3	CAPACITOR CERAMIC CHIP (CERAMIC)	*0.00

*591	*Bulk item	*	--SN-PB SOLDER (ALT)	
*592	*Bulk item	*	--SN-PB SOLDER	
*593	*Bulk item	*	--COATING COMPOUND (11723057)	
*594	*Bulk item	*	--INSULATING COMPOUND	
*595	*Bulk item	*	--SOLDER CREAM (11723084)	
*596	*Bulk item	*	--EPOXY CONDUCTIVE (11723101)	
*597	*Part	*11744252-4	CAPACITOR CERAMIC CHIP (CERAMIC)	*0.00
*598	*Bulk item	*	--SN-PB SOLDER (ALT)	
*599	*Bulk item	*	--SN-PB SOLDER	
*600	*Bulk item	*	--COATING COMPOUND (11723057)	
*601	*Bulk item	*	--INSULATING COMPOUND	
*602	*Bulk item	*	--SOLDER CREAM (11723084)	
*603	*Bulk item	*	--EPOXY CONDUCTIVE (11723101)	
*604	*Part	*11744252-5	CAPACITOR CERAMIC CHIP (CERAMIC)	*0.00
*605	*Bulk item	*	--SN-PB SOLDER (ALT)	
*606	*Bulk item	*	--SN-PB SOLDER	
*607	*Bulk item	*	--COATING COMPOUND (11723057)	
*608	*Bulk item	*	--INSULATING COMPOUND	
*609	*Bulk item	*	--SOLDER CREAM (11723084)	
*610	*Bulk item	*	--EPOXY CONDUCTIVE (11723101)	
*611	*Part	*11744252-6	CAPACITOR CERAMIC CHIP (CERAMIC)	*0.00
*612	*Bulk item	*	--SN-PB SOLDER (ALT)	
*613	*Bulk item	*	--SN-PB SOLDER	
*614	*Bulk item	*	--COATING COMPOUND (11723057)	
*615	*Bulk item	*	--INSULATING COMPOUND	
*616	*Bulk item	*	--SOLDER CREAM (11723084)	
*617	*Bulk item	*	--EPOXY CONDUCTIVE (11723101)	
*618	*Component	*11744253	HYBRID CIRCUIT UNCOATED	*0.00
*619	*Part	*11723103	--GOLD BONDING WIRE (AU 99.9%)	*0.00
*620	*Component	*11722971	--IMPACT SWITCH HYBRID CIRCUIT	*0.00
*621	*Part	*11718421-2	----CUP COVER (STAINLESS STEEL)	*0.00
*622	*Bulk item	*	------CU COATING	
*623	*Bulk item	*	------SN-PB PLATING (ALT)	
*624	*Part	*11718420-1	----INSULATION (PLASTIC)	*0.00
*625	*Part	*11718286	----SPRING (STAINLESS STEEL)	*0.00
*626	*Part	*11718287	----CONTACT (STAINLESS STEEL)	*0.00
*627	*Part	*11718419-2	----CUP BODY (STAINLESS STEEL)	*0.00
*628	*Bulk item	*	------NI PLATING	
*629	*Bulk item	*	------AU PLATING	
*630	*Bulk item	*	------SN-PB SOLDER	

*631	*Bulk item	*	------SN-PB SOLDER (ALT)	
*632	*Part	*11718420-2	----INSULATION (PLASTIC)	*0.00
*633	*Part	*11722972	----CONTACT HEX (BRASS)	*0.00
*634	*Bulk item	*	------CU COATING	
*635	*Bulk item	*	------SN-PB PLATING	
*636	*Part	*11718421-2	----CUP COVER (STAINLESS STEEL) (ALT)	*0.00
*637	*Bulk item	*	------CU COATING	
*638	*Bulk item	*	------AU PLATING	
*639	*Component	*11723000	------SAFETY & ARMING DEVICE	*0.00
*640	*Component	*11723006	--------ELECT DETONATOR CONNECTOR ASSY	*0.00
*641	*Part	*11723006*1	JACKET/INSULATOR (NYLON)	*0.00
*642	*Component	*11723007	CONNECTOR ELECT DETONATOR	*0.00
*643	*Part	*11723007*1	--BODY (BRASS)	*0.00
*644	*Bulk item	*	----CU COATING	
*645	*Bulk item	*	----AU PLATING	
*646	*Part	*11723007*2	--SPRING INSET (CU-BE ALLOY)	*0.00
*647	*Bulk item	*	----CU COATING	
*648	*Bulk item	*	----AU PLATING	
*649	*Component	*11723001	-------- SAFETY & ARMING DEVICE (UNLOADED)	*0.00
*650	*Part	*11723119	SPRING ROTOR (STAINLESS STEEL)	*0.00
*651	*Bulk item	*	--PASSIVATE TREATMENT	
*652	*Component	*11723002	FUZE BASE ASSY	*0.00
*653	*Part	*11723004	--BASE FUZE (AL ALLOY)	*0.00
*654	*Bulk item	*	----CHROMATE COATING	
*655	*Part	*11723028	-BARRIER FUZE BASE (STAINLESS STEEL)	*0.00
*656	*Bulk item	*	----PASSIVATE TREATMENT	
*657	*Part	*11723028	--BARRIER FUZE BASE (STEEL) (ALT)	*0.00
*658	*Bulk item	*	----CD CHROMATE	
*659	*Bulk item	*	----CHROMATE COATING	
*660	*Part	*11723028	--BARRIER FUZE BASE (STEEL) (ALT)	*0.00
*661	*Bulk item	*	----CD CHROMATE	
*662	*Bulk item	*	----CHROMATE COATING	
*663	*Part	*11723028	--BARRIER FUZE BASE (STEEL) (ALT)	*0.00
*664	*Bulk item	*	----CD CHROMATE	
*665	*Bulk item	*	----CHROMATE COATING	
*666	*Part	*11723028	BARRIER FUZE BASE (STAINLESS STEEL) (ALT)	*0.00
*667	*Bulk item	*	----PASSIVATE TREATMENT	
*668	*Part	*11723028	BARRIER FUZE BASE (STAINLESS STEEL) (ALT)	*0.00
*669	*Bulk item	*	----PASSIVATE TREATMENT	
*670	*Part	*11723028	BARRIER FUZE BASE (STAINLESS STEEL) (ALT)	*0.00

*671	*Bulk item	*	----PASSIVATE TREATMENT	
*672	*Part	*11723028	BARRIER FUZE BASE (STAINLESS STEEL) (ALT)	*0.00
*673	*Bulk item	*	----PASSIVATE TREATMENT	
*674	*Component	*11723005	FUZE BASE COVER ASSY	*0.00
*675	*Part	*11722977	--CONTACT DETONATOR (CU-BE ALLOY)	*0.00
*676	*Bulk item	*	----NI PLATING	
*677	*Bulk item	*	----AU PLATING	
*678	*Bulk item	*	----AU PLATING (ALT)	
*679	*Part	*11723039	--CONTACT MODE SWITCH (CU-BE ALLOY)	*0.00
*680	*Bulk item	*	----NI PLATING	
*681	*Bulk item	*	----AU PLATING	
*682	*Bulk item	*	----AU PLATING (ALT)	
*683	Part	11722976	--COVER FUZE BASE (POLYCARBONATE 30% GLASS)	*0.00
*684	Part	11722976	--COVER FUZE BASE (POLYCARBONATE 20% GLASS) (ALT)	*0.00
*685	*Part	*11722595	--PIN FIRING (STAINLESS STEEL)	*0.00
*686	*Bulk item	*	----PASSIVATE TREATMENT	
*687	*Part	*11722595	--PIN FIRING (STAINLESS STEEL) (ALT)	*0.00
*688	*Component	*11723045	ROTOR ASSY	*0.00
*689	*Part	*11722986	--JACKSCREW (STAINLESS STEEL)	*0.00
*690	*Bulk item	*	----PASSIVATE TREATMENT	
*691	*Part	*11722986	--JACKSCREW (STAINLESS STEEL) (ALT)	*0.00
*692	*Part	*11722987	--WHEEL JACKSCREW (ACETAL MOLDING)	*0.00
*693	*Part	*11722987	WHEEL JACKSCREW (ACETAL MOLDING) (ALT)	*0.00
*694	*Part	*11722987	WHEEL JACKSCREW (ACETAL MOLDING) (ALT)	*0.00
*695	*Part	*11722988	--SHAFT WHEEL & WORM (ACETAL MOLDING)	*0.00
*696	Part	11722988	SHAFT WHEEL & WORM (ACETAL MOLDING) (ALT)	*0.00
*697	Part	11722988	SHAFT WHEEL & WORM (ACETAL MOLDING) (ALT)	*0.00
*698	*Part	*11722989	--SHAFT WORM DRIVE (STAINLESS STEEL)	*0.00
*699	*Bulk item	*	----LUBRICATING MIXTURE (11737592)	
*700	*Part	*11723011	--SPRING GEAR LATCH (STAINLESS STEEL)	*0.00
*701	*Bulk item	*	----PASSIVATE TREATMENT	
*702	*Part	*11723018	--BODY ZIG ZAG (AL ALLOY)	*0.00
*703	*Bulk item	*	----ANODIC COATING	
*704	*Bulk item	*	----LUB FLUOROCARBON (11722967)	
*705	Part	11723019	COVER ROTOR (POLYCARBONATE MOLD (11723053))	*0.00
*706	*Part	*11723048	--SPRING BIAS (STAINLESS STEEL)	*0.00
*707	*Bulk item	*	----PASSIVATE TREATMENT	
*708	*Part	*11723035	--CAN ROTOR (STEEL)	*0.00
*709	*Bulk item	*	----SN COATING	
*710	*Bulk item	*	----SN COATING (ALT)	

*711	*Bulk item	*	----NI COATING (ALT)	
*712	*Part	*11723035	--CAN ROTOR (STEEL) (ALT)	*0.00
*713	*Bulk item	*	----SN COATING	
*714	*Bulk item	*	----SN COATING (ALT)	
*715	*Bulk item	*	----NI COATING (ALT)	
*716	*Part	*11723105	--CAM (STEEL)	*0.00
*717	*Bulk item	*	----NI COATING	
*718	*Part	*11723105	--CAM (STEEL) (ALT)	*0.00
*719	*Bulk item	*	----NI COATING	
*720	*Part	*11723105	--CAM (STEEL) (ALT)	*0.00
*721	*Bulk item	*	----NI COATING	
*722	*Part	*11723105	--CAM (STEEL) (ALT)	*0.00
*723	*Bulk item	*	----NI COATING	
*724	*Part	*11723117	--PIN GROOVE (STAINLESS STEEL)	*0.00
*725	*Bulk item	*	----PASSIVATE TREATMENT	
*726	*Part	*11723117	--PIN GROOVE (STAINLESS STEEL) (ALT)	*0.00
*727	*Part	*11723120	--SPRING LOCK (STAINLESS WIRE)	*0.00
*728	*Bulk item	*	----PASSIVATE TREATMENT	
*729	*Part	*11723120	--SPRING LOCK (STAINLESS STEEL) (ALT)	*0.00
*730	*Bulk item	*	----PASSIVATE TREATMENT	
*731	*Part	*11723131	--LOCK ROTOR (AL ALLOY)	*0.00
*732	*Bulk item	*	----CU COATING	
*733	*Bulk item	*	----AU PLATING	
*734	*Bulk item	*	----AU PLATING (ALT)	
*735	*Part	*11723132	--ROTOR LOCK SPRING (SPRING STEEL)	*0.00
*736	*Bulk item	*	----CU COATING	
*737	*Bulk item	*	----NI PLATING	
*738	*Bulk item	*	----AU PLATING	
*739	*Part	*11723132	ROTOR LOCK SPRING (STAINLESS STEEL) (ALT)	*0.00
*740	*Bulk item	*	----NI PLATING	
*741	*Bulk item	*	----AU PLATING	
*742	*Part	*11723036	ROTOR (POLYCARBONATE MOLDING 11723053)	*0.00
*743	*Component	*11722405	--------ELECT DETONATOR ASSY	*0.00
*744	*Component	*11722406	CUP LOADED	*0.00
*745	*Part	*11722414	--CUP (AL ALLOY)	*0.00
*746	*Bulk item	*	----SEALANT WATERPROOF (11720505)	
*747	*Part	*	--PEP (HMX)	*16.00 MG
*748	*Compound	*	----HMX (98.00%)	
*749	*Compound	*	----RDX (2.00%)	
*750	*Part	*	--PEP (HMX) (ALT)	*16.00 MG

*751	*Compound	*	----HMX (98.00%)	
*752	*Compound	*	----RDX (2.00%)	
*753	*Part	*	--PEP (PB AZIDE)	*14.00 MG
*754	*Compound	*	----PB AZIDE (100.00%)	
*755	*Component	*11722407	BRIDGED PLUG & IGN ASSY	*0.00
*756	*Part	*	--SPOT CHG (SPOT CHG)	*1.60 MG
*757	*Compound	*	----N-AMYL ALCOHOL (32.16%)	
*758	*Compound	*	----PB STYPHNATE (53.71%)	
*759	*Compound	*	----TOLUENE (6.51%)	
*760	*Compound	*	----CAMPHOR (0.60%)	
*761	*Compound	*	----NC (0.86%)	
*762	*Compound	*	----BUTYL ACETATE (4.55%)	
*763	*Compound	*	----NC (1.61%)	
*764	*Component	*11722408	--BRIDGE ASSY	*0.00
*765	*Part	*11720506	----BRIDGE WIRE (COMMERCIAL)	*0.00
*766	*Component	*11722409	----PLUG ASSY	*0.00
*767	*Part	*11722412	-PIN (WIRE ELECTRODE)	*0.00
*768	*Bulk item	*	---NI PLATING	
*769	*Bulk item	*	---AU PLATING	
*770	*Bulk item	*	---SEALANT WATERPROOF (11720505)	
*771	*Part	*11722410	-HEADER (STEEL)	*0.00
*772	*Bulk item	*	---NI PLATING	
*773	*Bulk item	*	---AU PLATING	
*774	*Bulk item	*	---SEALANT WATERPROOF (11720505)	
*775	*Part	*11722411	-PELLET (GLASS)	*0.00
*776	*Bulk item	*	---SEALANT WATERPROOF (11720505)	
*777	*Component	*11723138	--------PRIMER HOUSING ASSY	*0.00
*778	*Part	*11723032	HOUSING PRIMER CAGE (STAINLESS STEEL)	*0.00
*779	*Part	*11723032	HOUSING PRIMER CAGE (STAINLESS STEEL) (ALT)	*0.00
*780	*Part	*11723032	HOUSING PRIMER CAGE (STAINLESS STEEL) (ALT)	*0.00
*781	*Part	*11723032	HOUSING PRIMER CAGE (STAINLESS STEEL) (ALT)	*0.00
*782	*Bulk item	*	--PASSIVATE TREATMENT	
*783	*Part	*11723032	HOUSING PRIMER CAGE (STAINLESS STEEL) (ALT)	*0.00
*784	*Bulk item	*	--PASSIVATE TREATMENT	
*785	*Part	*11723031	INSERT DETONATOR (STAINLESS STEEL)	*0.00
*786	*Bulk item	*	--PASSIVATE TREATMENT	
*787	*Part	*11723031	INSERT DETONATOR (STEEL) (ALT)	*0.00
*788	*Bulk item	*	--CD CHROMATE	
*789	*Bulk item	*	--CHROMATE COATING	
*790	*Part	*11723031	INSERT DETONATOR (STEEL) (ALT)	*0.00

*791	*Bulk item	*	--CD CHROMATE	
*792	*Bulk item	*	--CHROMATE COATING	
*793	*Part	*11723031	INSERT DETONATOR (STEEL) (ALT)	*0.00
*794	*Bulk item	*	--CD CHROMATE	
*795	*Bulk item	*	--CHROMATE COATING	
*796	*Part	*11723031	INSERT DETONATOR (STEEL) (ALT)	*0.00
*797	*Bulk item	*	--CD CHROMATE	
*798	*Bulk item	*	--CHROMATE COATING	
*799	*Part	*11723031	INSERT DETONATOR (STEEL) (ALT)	*0.00
*800	*Bulk item	*	--CD CHROMATE	
*801	*Bulk item	*	--CHROMATE COATING	
*802	*Part	*11723093	SPRING STAB PRIMER (STAINLESS STEEL)	*0.00
*803	*Bulk item	*	--PASSIVATE TREATMENT	
*804	*Part	*11723139	CAGE PRIMER (STAINLESS STEEL)	*0.00
*805	*Bulk item	*	--PASSIVATE TREATMENT	
*806	*Part	*11723139	CAGE PRIMER (STAINLESS STEEL) (ALT)	*0.00
*807	*Component	*8865554	DETONATOR STAB M61	*0.00
*808	*Part	*8865557	--DISC DETONATOR (STAINLESS STEEL)	*0.00
*809	*Bulk item	*	----LACQUER CELL NITRATE	
*810	*Bulk item	*	----ADHESIVE PLASTIC (ALT)	
*811	*Bulk item	*	----BITUMINOUS COATING (ALT)	
*812	*Bulk item	*	----ADHESIVE PROXSEAL (9272251)	
*813	*Part	*	--PEP (PB AZIDE)	*85.00 MG
*814	*Compound	*	----PB AZIDE (100.00%)	
*815	*Part	*	--PEP (PB AZIDE) (ALT)	*85.00 MG
*816	*Compound	*	----PB AZIDE (100.00%)	
*817	*Part	*	--PEP (RDX)	*32.50 MG
*818	*Compound	*	----RDX (100.00%)	
*819	*Part	*	--PEP (RDX BLEND 98/2) (ALT)	*32.50 MG
*820	*Compound	*	----RDX (98.50%)	
*821	*Compound	*	----GRAPHITE (0.50%)	
*822	*Compound	*	----CA RESINATE (1.00%)	
*823	*Part	*	--PEP (PRIMER MIX NOL #130*2)	*42.50 MG
*824	*Compound	*	----PB STYPHNATE (40.00%)	
*825	*Compound	*	----PB AZIDE (20.00%)	
*826	*Compound	*	----TETRACENE (5.00%)	
*827	*Compound	*	----BA NITRATE (20.00%)	
*828	*Compound	*	----SB SULFIDE (15.00%)	
*829	*Part	*8865555	--CUP (STAINLESS STEEL)	*0.00
*830	*Bulk item	*	----LACQUER CELL NITRATE	

*831	*Bulk item	*	----ADHESIVE PLASTIC (ALT)	
*832	*Bulk item	*	----BITUMINOUS COATING (ALT)	
*833	*Bulk item	*	----ADHESIVE PROXSEAL (9272251)	
*834	*Part	*8865556	--DISC CLOSING (STAINLESS STEEL)	*0.00
*835	*Bulk item	*	----LACQUER CELL NITRATE	
*836	*Bulk item	*	----ADHESIVE PLASTIC (ALT)	
*837	*Bulk item	*	----BITUMINOUS COATING (ALT)	
*838	*Bulk item	*	----ADHESIVE PROXSEAL (9272251)	
*839	*Part	*8865556	--DISC CLOSING (STAINLESS STEEL) (ALT)	*0.00
*840	*Bulk item	*	----LACQUER CELL NITRATE	
*841	*Bulk item	*	----ADHESIVE PLASTIC (ALT)	
*842	*Bulk item	*	----BITUMINOUS COATING (ALT)	
*843	*Bulk item	*	----ADHESIVE PROXSEAL (9272251)	
*844	*Component	*11730630	PRIMER DELAY	*0.00
*845	*Part	*11730626	--BAFFLE SCREEN (STAINLESS STEEL)	*0.00
*846	*Part	*11730629	--FERRULE (AL ALLOY)	*0.00
*847	*Bulk item	*	----EPOXY POLYAMIDE (11730635-1)	
*848	*Bulk item	*	----EPOXY POLYAMIDE (11730635-2)	
*849	*Component	*11730625	--INPUT CUP ASSY	*0.00
*850	*Part	*	----PEP (OUTPUT MIX)	*15.00 MG
*851	*Compound	*	-PB AZIDE (11.00%)	
*852	*Compound	*	-ZR (26.00%)	
*853	*Compound	*	-PB PEROXIDE (60.30%)	
*854	*Compound	*	-VITON (2.70%)	
*855	*Part	*	----PEP (INPUT MIX)	*12.00 MG
*856	*Compound	*	-PB STYPHNATE (40.00%)	
*857	*Compound	*	-TETRACENE (5.00%)	
*858	*Compound	*	-SB SULFIDE (15.00%)	
*859	*Compound	*	-BA NITRATE (20.00%)	
*860	*Compound	*	-PB AZIDE (20.00%)	
*861	*Part	*11730628	----CUP INPUT (AL ALLOY)	*0.00
*862	*Bulk item	*	-EPOXY POLYAMIDE (11730635-1)	
*863	*Component	*11730631	--DELAY OUTPUT CUP ASSY	*0.00
*864	*Part	*11730632	----CUP DELAY (AL ALLOY)	*0.00
865	Part		----PEP (PB AZIDE)	17.00 MG
866	Compound		-PB AZIDE (100.00%)	
867	Part		----PEP (DELAY MIX*1)	50.00 MG
868	Compound		-BA CHROMATE (86.00%)	
869	Compound		-B AMORPHOUS PWDR (14.00%)	
870	Part	11730634	----DISC COVER (AL ALLOY)	0.00
871	Bulk item		-EPOXY POLYAMIDE (11730635-2)	

USADACS - MIDAS DETAILED STRUCTURE FOR A MUNITION (LESS BULK ITEMS)

06/02/97

Nomenclature: CTG 81MM ILLUM M301 W/FUZE TIME M84

NSN: 1315000284964 DODIC: C226 Reported Weight: 10.7000 LB

DRAWING #	NOMENCLATURE	TYPE	SPECIFICATION	TGCS	-- REPORTED --- WEIGHT	UNIT	FACTOR	FACTORED WEIGHT(LB)
8865058	CTG 81MM ILLUM M301 W/FUZE TIME M84	Munition	MIL-C-46919		10.7000	LB	1.0000	
8865053	PRIMER PERCUSSION M34 ASSY	Component	MIL-P-46917		738.1500	GR	1.0000	
8865048	DISC (PAPER ONIONSKIN)	Part	MIL-P-157		0.0600	GR	1.0000	0.00000900
8865048	DISC (TAPE POLYESTER) (ALT)	Part	COMMERCIAL	/PAB////	0.0600	GR	1.0000	
8865049	PELLET (BLACK PWDR CL 7)	Part	MIL-P-223	///7//	1.6500	GR	1.0000	0.00023600
	K NITRATE (74.00%)	Compound	MIL-P-156	///A//				
	S (10.40%)	Compound	MIL-S-14929	/1/COMM.//				
	CHARCOAL (15.60%)	Compound	JAN-C-178	//A///				
8865050	PLUG FIRING (BRS)	Part	ASTM-B16				1.0000	
8865051	HEAD (STEEL)	Part	ASTM-A108	/**////	476.2100	GR	1.0000	0.06803100
8865051	HEAD (BRS) (ALT)	Part	ASTM-B16		476.2100	GR	1.0000	
8865052	HOUSING (STEEL)	Part	ASTM-A108	/**////	227.0100	GR	1.0000	0.03243100
8865052	HOUSING (BRS) (ALT)	Part	ASTM-B16		227.0100	GR	1.0000	
8865050	PLUG FIRING (BRS)	Part	ASTM-B36				1.0000	
8840536	PRIMER PERC M35 ASSY	Component	MIL-P-46425				1.0000	
8840537	CUP (CU ALLOY)	Part	MIL-C-50	//260///			1.0000	
8840534	COVER (PAPER FOILING)	Part	MIL-P-60619	/3////			1.0000	
8840535	ANVIL (CU ALLOY)	Part	MIL-C-50	//260///			1.0000	
	PEP (PRIMER MIX #70)	Part		///1//	0.3700	GR	1.0000	0.00005300
	PB THIOCYANATE (25.00%)	Compound	MIL-L-65					
	K CHLORATE (53.00%)	Compound	MIL-P-150	//A/1//				
	SB SULFIDE (17.00%)	Compound	MIL-A-159	///1//				
	TNT (5.00%)	Compound	MIL-T-248	/1 OR 2////				
	PEP (PRIMER MIX #70 (G/G)) (ALT)	Part			48.0000	GR	1.0000	
	PB THIOCYANATE (22.50%)	Compound	MIL-L-65					
	K CHLORATE (50.50%)	Compound	MIL-P-150	//A/1//				
	SB SULFIDE (14.50%)	Compound	MIL-A-159	///1//				
	TNT (2.50%)	Compound	MIL-T-248	/1 OR 2////				
	GROUND GLASS (10.00%)	Compound	JAN-G-479	///A//				
8865054	PROJ ILLUM 81MM M301A2/A3 LOADING ASSY	Component	MIL-P-60447		7.7200	LB	1.0000	
8865021	DISC COUPLING (STEEL)	Part	ASTM-A109				1.0000	
8865033	DISC PARACHUTE (CHIPBOARD)	Part	UU-C-282		0.0200	LB	1.0000	0.02000000
8865034	SPACER PARACHUTE (STEEL)	Part	ASTM-A109		0.3200	LB	1.0000	0.32000000
8865010	CUP PARACHUTE (BOXBOARD)	Part	MIL-B-20467		0.0100	LB	2.0000	0.02000000
8865025	PIN SHEAR (BRS)	Part	ASTM-B134				4.0000	
8882169	GROOVE PIN (STEEL)	Part	COMMERCIAL				4.0000	
8882169	GROOVE PIN (BRS) (ALT)	Part	COMMERCIAL				4.0000	
9230153	RING SUPPORT (POLYETHYLENE PLASTIC)	Part	L-P-390				1.0000	
8865025	PIN SHEAR (BRS) (ALT)	Part	ASTM-B16				4.0000	
8865046	PARACHUTE FOLDING ASSY	Component					1.0000	
8865035	DISC SEPARATOR (CHIPBOARD)	Part	UU-C-282	///2//	0.0100	LB	1.0000	0.01000000
8865032	PARACHUTE HOLDER ASSY	Component			0.0700	LB	1.0000	
8865005	EYELET ROLLED FLANGE (BRS)	Part	COMMERCIAL				2.0000	
8865009	BOTTOM (COTTON)	Part	CCC-C-432	/5//1//			1.0000	
8865011	TAB (COTTON)	Part	CCC-C-432	/5//1//			1.0000	
8865020	BODY (COTTON)	Part	CCC-C-432				1.0000	
8865057	PARACHUTE ASSY	Component	MIL-C-13197				1.0000	
8865014	CROWN (PARACHUTE CLOTH)	Part	PA-PD-76	/D////			1.0000	
8865013	GORE (PARACHUTE CLOTH)	Part	PA-PD-76	/D////			8.0000	
8865057*1	SHROUD LINE (NYLON CORD)	Part	COMMERCIAL				1.0000	
8865057*2	CENTER CORD (COTTON TWINE)	Part	T-T-881				1.0000	
9244065	CLAMP SERRATED (STEEL ZN PLATED)	Part	COMMERCIAL				1.0000	

USADACS - MIDAS DETAILED STRUCTURE FOR A MUNITION (LESS BULK ITEMS)

06/02/97

Nomenclature: CTG 81MM ILLUM M301 W/FUZE TIME M84

NSN: 1315000284964 DODIC: C226 Reported Weight: 10.7000 LB

DRAWING #	NOMENCLATURE	TYPE	SPECIFICATION	TGCS	-- REPORTED --- WEIGHT	UNIT	FACTOR	FACTORED WEIGHT(LB)
8865056	ILLUMINANT ASSY	Component	MIL-C-13197		2.6300	LB	1.0000	
8865015	DISC QUICKMATCH (STEEL)	Part	ASTM-A109		0.1300	LB	1.0000	0.13000000
8865016	SPACER QUICKMATCH (FELT)	Part	ASTM-D2475	/8R5////			1.0000	
8865018	SLEEVE OVAL (CU ALLOY)	Part	COMMERCIAL				1.0000	
8865019	RING FILLER (WOOD)	Part	COMMERCIAL		0.0300	LB	1.0000	0.03000000
8865024	DISC TOP (CHIPBOARD)	Part	UU-C-282	///2//	0.0100	LB	1.0000	0.01000000
8865029	DISC (STEEL)	Part	ASTM-A109		0.2300	LB	1.0000	0.23000000
8865030	CUP SUSPENSION (STEEL)	Part	ASTM-A109		0.1700	LB	1.0000	0.17000000
8865056*1	NAIL FLATHEAD (STEEL)	Part	COMMERCIAL				6.0000	
8865023	SUSPENSION WIRE ASSY	Component					1.0000	
MS20664-C3	BALL END (STAINLESS STEEL)	Part	FED-STD-66	/**////			1.0000	
8865023*1	CABLE (STEEL GALVANIZED)	Part	COMMERCIAL				1.0000	
8865059	CASE LOADING ASSY	Component					1.0000	
8865017	SUPPORT CHARGE (STEEL)	Part	ASTM-A109		0.0400	LB	1.0000	0.04000000
8865031	CASE (KRAFT PAPER)	Part	UU-P-268		0.2100	LB	1.0000	0.21000000
	PEP (FIRST FIRE COMP)	Part	8865059		0.8000	OZ	1.0000	0.05000000
	BA NITRATE (50.00%)	Compound	MIL-B-162	///1,3,OR 4//				
	SI (20.00%)	Compound	MIL-S-230	//1/B//				
	TNC (10.00%)	Compound	MIL-T-13723					
	ZR HYDRIDE (15.00%)	Compound	MIL-Z-21353					
	LAMINAC 4116/LUPERSL (5.00%)	Compound	COMMERCIAL					
	PEP (ILLUMINANT COMP)	Part	8865059		22.0000	OZ	1.0000	1.37500000
	MG PWDR 30/50 (55.00%)	Compound	MIL-P-14067	/1////				
	NA NITRATE (36.00%)	Compound	MIL-S-322	//B/2//				
	LAMINAC 4116/LUPERSL (9.00%)	Compound	COMMERCIAL					
8865056*2	QUICKMATCH	Component	MIL-Q-378		0.0200	OZ	3.0000	
8865056*2	COTTON WICK (COTTON)	Part	COMMERCIAL				1.0000	
	PEP (BLACK PWDR)	Part	COMMERCIAL		0.0160	OZ	1.0000	0.00300000
	K NITRATE (74.00%)	Compound	MIL-P-156					
	CHARCOAL (15.60%)	Compound	JAN-C-178					
	S (10.40%)	Compound	JAN-S-487	//A///				
9232481	PROJ ILLUM 81MM M301A2/A3 METAL PARTS	Component					1.0000	
9232482	CONE TAIL (STEEL)	Part	MIL-S-11310				1.0000	
9232483	ADAPTER (STEEL)	Part	ASTM-A108				1.0000	
9232484	TUBE BODY (STEEL TUBING)	Part	QQ-T-830				1.0000	
9232484	TUBE BODY (STEEL) (ALT)	Part	ASTM-A513				1.0000	
9232484	TUBE BODY (STEEL TUBING) (ALT)	Part	QQ-T-825				1.0000	
9232485	PIN GROOVE (STEEL)	Part	COMMERCIAL				6.0000	
9232484	TUBE BODY (STEEL) (ALT)	Part	ASTM-A450				1.0000	
8865062	CTG IGNITION M6 ASSY	Component	MIL-C-11609				1.0000	
	PROP M9 FLAKE (PROP M9 FLAKE)	Part	MIL-P-60398	/2////	122.0000	GR	1.0000	0.01742900
	ETHYL CENTRALITE (0.75%)	Compound	MIL-E-255	///2,3//				
	K NITRATE (1.50%)	Compound	MIL-P-156	///2,3,4//				
	NC (57.75%)	Compound	MIL-N-244	/2/C///				
	NITROGLYCERIN (40.00%)	Compound	MIL-N-246	/1////				
8865063-2	BODY ASSY	Component					1.0000	
8865063	BODY (PAPER PARAFFINED)	Part	COMMERCIAL				1.0000	
8865064	WASHER ASSY	Component					1.0000	
8865065	DISC (PAPER ONIONSKIN)	Part	MIL-P-157				1.0000	
8865066	WASHER (CHIPBOARD)	Part	UU-C-282				1.0000	
8865064	WASHER ASSY	Component					1.0000	
8865065	DISC (PAPER ONIONSKIN)	Part	MIL-P-157				1.0000	
8865066	WASHER (CHIPBOARD)	Part	UU-C-282				1.0000	

USADACS - MIDAS DETAILED STRUCTURE FOR A MUNITION (LESS BULK ITEMS)

Nomenclature: CTG 81MM ILLUM M301 W/FUZE TIME M84
NSN: 1315000284964 DODIC: C226 Reported Weight: 10.7000 LB

DRAWING #	NOMENCLATURE	TYPE	SPECIFICATION	TGCS	-- REPORTED --- WEIGHT	UNIT	FACTOR	FACTORED WEIGHT(LB)
8865086	HOLDER INCREMENT M3 ASSY	Component	MIL-H-46906				1.0000	
8865087	COLLAR (STEEL)	Part	QQ-S-698				1.0000	
8865088	CLIP (STEEL WIRE)	Part	QQ-W-470				4.0000	
10523459	PROJ ILLUM 81MM M301A2 METAL PARTS (ALT)	Component	MIL-P-10590		3.1700	LB	1.0000	
10523454	PIN ADAPTER (STEEL)	Part	ASTM-A108		0.0008	LB	6.0000	
10534399	GROOVE PIN (STEEL) (ALT)	Part	COMMERCIAL				6.0000	
10523456	ADAPTER (STEEL)	Part	ASTM-A108		0.4400	LB	1.0000	
10523457	TUBE BODY (STEEL TUBING)	Part	QQ-T-830		2.7300	LB	1.0000	
10523455	CONE TAIL (STEEL)	Part	ASTM-A107		1.3800	LB	1.0000	
10523464	FIN M4A1 ASSY	Component	MIL-F-60613		0.5900	LB	1.0000	
10523458	SHANK (AL ALLOY)	Part	ASTM-B221				1.0000	
10523464	FIN (AL ALLOY)	Part	QQ-A-591				12.0000	
9205598	FUZE TIME M84	Component	PA-PD-2429		1.8200	LB	1.0000	
9205596	RING ADJUSTMENT (AL ALLOY)	Part	ASTM-B85	/SC84B////	480.0000	GR	1.0000	0.06857300
9205596	RING ADJUSTMENT (AL ALLOY) (ALT)	Part	ASTM-B85	/S12A////	480.0000	GR	1.0000	
8864546	WASHER SPRING TENSION (STEEL)	Part	QQ-S-777	//1095///	82.0000	GR	1.0000	0.01171500
9205597	BODY ASSY	Component					1.0000	
8864426-2	WASHER A NON-METALLIC (CLOTH FUZE)	Part	JAN-C-367		8.0200	GR	1.0000	0.00114600
9205586	LINER CHG CAVITY (STEEL)	Part	ASTM-A109		97.0000	GR	1.0000	0.01385700
9205581	COVER RETAINER (PLASTIC)	Part	L-P-512	/1//L//	5.8000	GR	1.0000	0.00082900
9205582	DISC RETAINER (STEEL)	Part	ASTM-A109		55.0000	GR	1.0000	0.00785700
9205582	DISC RETAINER (STAINLESS STEEL) (ALT)	Part	QQ-S-766	/301////	55.0000	GR	1.0000	
9205582	DISC RETAINER (STAINLESS STEEL) (ALT)	Part	QQ-S-766	/302////	55.0000	GR	1.0000	
9205584	COVER NON-METALLIC (PAPER ONIONSKIN)	Part	MIL-P-157		0.0050	GM	2.0000	0.00002200
9205592	RING RETAINER (ZN ALLOY)	Part	ASTM-B86	/AG40A////	130.0000	GR	1.0000	0.01857200
9205592	RING RETAINER (ZN ALLOY) (ALT)	Part	ASTM-B86	/AC41A////	130.0000	GR	1.0000	
	PEP (BLACK PWDR CL 5)	Part	MIL-P-223	///5//	75.0000	GR	1.0000	0.01071500
	K NITRATE (74.00%)	Compound	MIL-P-156	///1//				
	S (10.40%)	Compound	MIL-S-14929					
	CHARCOAL (15.60%)	Compound	JAN-C-178	///1//				
9234458-4	PELLET IGN (BORON K NITRATE)	Part	MIL-P-46994		92.0000	MG	1.0000	0.00020300
	K NITRATE (70.70%)	Compound	MIL-P-156					
	BORON AMPHOROUS (23.70%)	Compound	MIL-B-51092					
	POLYESTER RESIN (5.49%)	Compound	MIL-P-81351					
	CATALYST (0.08%)	Compound	COMMERCIAL					
	ACCELERATOR (0.03%)	Compound	COMMERCIAL					
9205595	BODY & PIN ASSY	Component					1.0000	
9205601	BODY (AL ALLOY)	Part	ASTM-B85	/S12A////	143.0000	GM	1.0000	0.31531500
9205583	PIN UPPER RING LOCK (STEEL)	Part	ASTM-A108	/B1113////	7.0000	GR	1.0000	0.00100000
9205595*1	PELLET (POLYAMIDE PLASTIC)	Part	MIL-M-20693	/1////	0.2200	GM	1.0000	0.00048500
8798919	PRIMER PERC M39A1 ASSY	Component	MIL-P-12951				1.0000	
8798921	BODY (CU ALLOY)	Part	MIL-C-50				1.0000	
8798923	DISC (PAPER SEALING)	Part	MIL-P-60169	/2////			1.0000	
8798920	ANVIL (CU ALLOY)	Part	MIL-C-50				1.0000	
8798922	CUP (CU ALLOY)	Part	MIL-C-21768				1.0000	
	PEP (PRIMER MIX)	Part	9278188		0.4000	GR	1.0000	0.00005700
	K CHLORATE (37.05%)	Compound	MIL-P-150	//A/2//				
	PB THIOCYANATE (38.13%)	Compound	JAN-L-65					
	TNT (5.69%)	Compound	MIL-T-248	/1////				
	BA NITRATE (8.68%)	Compound	MIL-B-162					
	GROUND GLASS (10.45%)	Compound	JAN-G-479					
9205600	GRADUATED TIME TRAIN RING ASSY	Component			2053.0000	GR	1.0000	
8864428-2	WASHER B NON-METALLIC (PAPER ONIONSKIN)	Part	MIL-P-157		0.6100	GR	1.0000	0.00008700

USADACS - MIDAS DETAILED STRUCTURE FOR A MUNITION (LESS BULK ITEMS)

06/02/97

Nomenclature: CTG 81MM ILLUM M301 W/FUZE TIME M84

NSN: 1315000284964 DODIC: C226 Reported Weight: 10.7000 LB

DRAWING #	NOMENCLATURE	TYPE	SPECIFICATION	TGCS	-- REPORTED --- WEIGHT	UNIT	FACTOR	FACTORED WEIGHT(LB)
9205599	RING GRADUATED TIME TRAIN (CU ALLOY)	Part	MIL-C-13351		138.0000	GM	1.0000	0.30429000
9205599	RING GRADUATED TIME TRAIN (BRS) (ALT)	Part	ASTM-B16		138.0000	GM	1.0000	
8864430	DISC NON-METALLIC (POLYETHYLENE PLASTIC)	Part	L-P-378	/1/A///	0.0300	GR	1.0000	0.00000400
8864431	WASHER FLAT (BRS)	Part	ASTM-B36	//6///	0.6500	GR	1.0000	0.00009300
8864431	WASHER FLAT (BRS) (ALT)	Part	ASTM-B36	//8///	0.6500	GR	1.0000	
8864427	DISC SAFETY (BRS)	Part	ASTM-B16		5.4000	GR	1.0000	0.00077100
8864426-1	WASHER A NON-METALLIC (CLOTH FUZE)	Part	JAN-C-367		7.0900	GR	1.0000	0.00101300
9234458-2	PELLET IGN (BORON K NITRATE)	Part	MIL-P-46994		87.0000	MG	1.0000	0.00019200
	K NITRATE (70.70%)	Compound	MIL-P-156					
	BORON AMPHOROUS (23.70%)	Compound	MIL-B-51092					
	POLYESTER RESIN (5.49%)	Compound	MIL-P-81351					
	CATALYST (0.08%)	Compound	COMMERCIAL					
	ACCELERATOR (0.03%)	Compound	COMMERCIAL					
9234458-3	PELLET IGN (BORON K NITRATE)	Part	MIL-P-46994		75.0000	MG	1.0000	0.00016500
	K NITRATE (70.70%)	Compound	MIL-P-156					
	BORON AMPHOROUS (23.70%)	Compound	MIL-B-51092					
	POLYESTER RESIN (5.49%)	Compound	MIL-P-81351					
	CATALYST (0.08%)	Compound	COMMERCIAL					
	ACCELERATOR (0.03%)	Compound	COMMERCIAL					
	PEP (FUZE PWDR BLEND*1)	Part	MIL-P-663	/1 & 2////	56.0000	GR	1.0000	0.00800000
	K NITRATE (72.00%)	Compound	MIL-P-156	///1//				
	S (13.20%)	Compound	COMMERCIAL					
	CHARCOAL (7.80%)	Compound	MIL-C-178	///A//				
	COAL (7.00%)	Compound	COMMERCIAL					
9205603	UPPER TIME TRAIN ASSY	Component			1540.0000	GR	1.0000	
8864428-1	WASHER B NON-METALLIC (PAPER ONIONSKIN)	Part	MIL-P-157		0.5400	GR	1.0000	0.00007700
8864431	WASHER FLAT (BRS)	Part	ASTM-B36	//6///	0.6500	GR	1.0000	0.00009300
8864431	WASHER FLAT (BRS) (ALT)	Part	ASTM-B36	//8///	0.6500	GR	1.0000	
8864430	DISC NON-METALLIC (POLYETHYLENE PLASTIC)	Part	L-P-378	/1/A///	0.0300	GR	1.0000	0.00000400
9205594	RING UPPER TIME TRAIN (CU ALLOY)	Part	MIL-C-13351		1640.0000	GR	1.0000	0.23429000
9205594	RING UPPER TIME TRAIN (BRS) (ALT)	Part	ASTM-B16		1640.0000	GR	1.0000	
9234458-1	PELLET IGN (BORON K NITRATE)	Part	MIL-P-46994		115.0000	MG	1.0000	0.00025400
	K NITRATE (70.70%)	Compound	MIL-P-156					
	BORON AMPHOROUS (23.70%)	Compound	MIL-B-51092					
	POLYESTER RESIN (5.49%)	Compound	MIL-P-81351					
	CATALYST (0.08%)	Compound	COMMERCIAL					
	ACCELERATOR (0.03%)	Compound	COMMERCIAL					
	PEP (FUZE PWDR BLEND*1)	Part	MIL-P-663	/1 & 2////	49.0000	GR	1.0000	0.00700000
	K NITRATE (72.00%)	Compound	MIL-P-156	///1//				
	S (13.20%)	Compound	COMMERCIAL					
	CHARCOAL (7.80%)	Compound	MIL-C-178	///A//				
	COAL (7.00%)	Compound	COMMERCIAL					
9205588	HEAD ASSY	Component			5996.0000	GR	1.0000	
9205590	PIN PLUNGER GUIDE (STEEL)	Part	ASTM-A108	/**////	2.7000	GR	1.0000	0.00038600
9205587	WIRE SAFETY (SPRING STEEL)	Part	ASTM-A228		25.0000	GR	1.0000	0.00357200
9205589	HEAD (BRS)	Part	ASTM-B124		5520.0000	GR	1.0000	0.78858700
9205589	HEAD (BRS) (ALT)	Part	ASTM-B16		5520.0000	GR	1.0000	
8864247	PLUNGER ASSY	Component			451.0000	GR	1.0000	
8864244	PLUNGER (STEEL)	Part	ASTM-A108	/1117////			1.0000	
8864244	PLUNGER (STEEL) (ALT)	Part	ASTM-A108	/12L14////	290.0000	GR	1.0000	
8864245	GUIDE PLUNGER (STEEL)	Part	ASTM-A108	/12L14////			1.0000	
8864245	GUIDE PLUNGER (STEEL) (ALT)	Part	ASTM-A108	/1010////	150.0000	GR	1.0000	
8864245	GUIDE PLUNGER (STEEL TUBING) (ALT)	Part	QQ-T-830	/MT1010////	150.0000	GR	1.0000	

USADACS - MIDAS DETAILED STRUCTURE FOR A MUNITION (LESS BULK ITEMS)

Nomenclature: CTG 81MM ILLUM M301 W/FUZE TIME M84
NSN: 1315000284964 DODIC: C226 Reported Weight: 10.7000 LB

DRAWING #	NOMENCLATURE	TYPE	SPECIFICATION	TGCS	-- REPORTED --- WEIGHT	UNIT	FACTOR	FACTORED WEIGHT(LB)
8864245	GUIDE PLUNGER (STEEL TUBING) (ALT)	Part	QQ-T-830	/MT1015////	150.0000	GR	1.0000	
8864246	PIN SHEAR (CU WIRE)	Part	ASTM-B3				2.0000	
8865214	INCREMENT PROP M2A1 ASSY	Component	MIL-I-14961		205.0000	GR	4.0000	
8865212	BAG ASSY (CELLOPHANE)	Part	MIL-C-13510				1.0000	
8865212	BAG ASSY (CELLOPHANE) (ALT)	Part	COMMERCIAL				1.0000	
8865213	SHEET PROPELLANT (PROP M8)	Part	MIL-STD-652		203.5000	GR	1.0000	0.11628800
	NITROGLYCERIN (43.00%)	Compound	MIL-N-246	/1////				
	DIETHYLPHTHALATE (3.00%)	Compound	MIL-D-242					
	K NITRATE (1.25%)	Compound	MIL-P-156	///2,3,OR 4//				
	ETHYL CENTRALITE (0.60%)	Compound	MIL-E-255	///2 OR 3//				
	NC (52.15%)	Compound	MIL-N-244	/1/C///				
								4.65170100

USADACS - MIDAS DETAILED STRUCTURE FOR A MUNITION (LESS BULK ITEMS)

06/02/97

Nomenclature: CTG 81MM HE M374 W/O FUZE

NSN: 1315009356007 DODIC: C236 Reported Weight: 9.3400 LB

DRAWING #	NOMENCLATURE	TYPE	SPECIFICATION	TGCS	-- REPORTED --- WEIGHT	UNIT	FACTOR	FACTORED WEIGHT(LB)
9225283	CTG 81MM HE M374 W/O FUZE	Munition	MIL-C-46995		9.3400	LB	1.0000	
7549026	HOLDER INCREMENT (STEEL)	Part	ASTM-A109		0.0120	LB	1.0000	0.01200000
9218640	PLATE PRESSURE (AL ALLOY)	Part	ASTM-B211		0.1117	OZ	1.0000	0.00698100
7549014	LABEL WARNING (TAPE)	Part	PPP-T-60	/3//1//			1.0000	
7549014	LABEL WARNING (TAPE) (ALT)	Part	L-T-90	/1//B//			1.0000	
7549010	WASHER (ASBESTOS)	Part	MIL-G-12803	//P-1161A///			1.0000	
7549076	PLUG (AL ALLOY)	Part	QQ-A-591		0.3900	LB	1.0000	0.39000000
7549009	PLUG (AL ALLOY) (ALT)	Part	QQ-A-591		0.3900	LB	1.0000	
7549173	PRIMER PERC M71A2	Component	MIL-P-46568				1.0000	
7549176	BODY (AL ALLOY)	Part	ASTM-B211		8.0450	GM	1.0000	0.01773900
7549178	DISC CLOSING (AL FOIL)	Part	MIL-A-148	/1////			1.0000	
7549174	HEAD (AL ALLOY)	Part	ASTM-B211		6.8520	GM	1.0000	0.01510900
7549175	PLUG FIRING (AL ALLOY)	Part	ASTM-B211		0.7900	GM	1.0000	0.00174200
7549177	PELLET (BLACK PWDR CL 7)	Part	MIL-P-223	///7//	3.1200	GR	1.0000	0.00044600
	K NITRATE (74.00%)	Compound	MIL-P-156	///A//				
	S (10.40%)	Compound	MIL-S-14929	/1/COMM.//				
	CHARCOAL (15.60%)	Compound	JAN-C-178	//A///				
8840536	PRIMER PERC M35 ASSY	Component	MIL-P-46425				1.0000	
8840537	CUP (CU ALLOY)	Part	MIL-C-50	//260///			1.0000	
8840534	COVER (PAPER FOILING)	Part	MIL-P-60619	/3////			1.0000	
8840535	ANVIL (CU ALLOY)	Part	MIL-C-50	//260///			1.0000	
	PEP (PRIMER MIX #70)	Part		///1//	0.3700	GR	1.0000	0.00005300
	PB THIOCYANATE (25.00%)	Compound	MIL-L-65					
	K CHLORATE (53.00%)	Compound	MIL-P-150	//A/1//				
	SB SULFIDE (17.00%)	Compound	MIL-A-159	///1//				
	TNT (5.00%)	Compound	MIL-T-248	/1 OR 2////				
	PEP (PRIMER MIX #70 (G/G)) (ALT)	Part			48.0000	GR	1.0000	
	PB THIOCYANATE (22.50%)	Compound	MIL-L-65					
	K CHLORATE (50.50%)	Compound	MIL-P-150	//A/1//				
	SB SULFIDE (14.50%)	Compound	MIL-A-159	///1//				
	TNT (2.50%)	Compound	MIL-T-248	/1 OR 2////				
	GROUND GLASS (10.00%)	Compound	JAN-G-479	///A//				
10520200	FIN ASSY M149	Component	MIL-F-60844				1.0000	
7549028	HOUSING CTG (AL ALLOY)	Part	ASTM-B221		0.4500	LB	1.0000	0.45000000
7549028	HOUSING CTG (AL ALLOY) (ALT)	Part	ASTM-B211		0.4500	LB	1.0000	
7549028	HOUSING CTG (AL ALLOY) (ALT)	Part	ASTM-B247		0.4500	LB	1.0000	
7549027	HOLDER INCREMENT (STEEL)	Part	ASTM-A109		0.0060	LB	1.0000	0.00600000
10520199	FIN (AL ALLOY)	Part	ASTM-B221		0.2400	LB	1.0000	0.24000000
9233373	CTG IGN M66A1	Component	MIL-C-46280				1.0000	
8837348	LINER (BRS)	Part	ASTM-B36	//6///	0.0060	LB	2.0000	0.01200000
8837349	DISC CLOSING (CHIPBOARD)	Part	UU-C-282				1.0000	
	PROP M9 FLAKE (PROP M9 FLAKE)	Part	MIL-P-60398	/2////	115.0000	GR	1.0000	0.01642900
	ETHYL CENTRALITE (0.75%)	Compound	MIL-E-255	///2,3//				
	K NITRATE (1.50%)	Compound	MIL-P-156	///2,3,4//				
	NC (57.75%)	Compound	MIL-N-244	/2/C///				
	NITROGLYCERIN (40.00%)	Compound	MIL-N-246	/1////				
9235614	BODY ASSY	Component					1.0000	
9235614*1	TUBE OUTER (PAPER)	Part	9243255				1.0000	
9235614*2	TUBE INSERT (PAPER)	Part	9243255				1.0000	
9235613	TUBE ASSY	Component					1.0000	
9235612	DISC (PAPER FLUORECENT)	Part	9235225				1.0000	
8837355	TUBE PAPER (PAPER)	Part	COMMERCIAL				1.0000	

USADACS - MIDAS DETAILED STRUCTURE FOR A MUNITION (LESS BULK ITEMS)

Nomenclature: CTG 81MM HE M374 W/O FUZE
NSN: 1315009356007 DODIC: C236 Reported Weight: 9.3400 LB

DRAWING #	NOMENCLATURE	TYPE	SPECIFICATION	TGCS	-- REPORTED --- WEIGHT	UNIT	FACTOR	FACTORED WEIGHT(LB)
8837352	COVER (PAPER ONIONSKIN)	Part	MIL-P-157				1.0000	
8837354	WASHER (CHIPBOARD)	Part	UU-C-282				1.0000	
8881021	CHG A PROP INCR M90	Component	MIL-I-46912				1.0000	
8881022	BAG PROP (COTTON CLOTH)	Part	MIL-C-43033	///1//			1.0000	
	PROP M9 FLAKE (PROP M9 FLAKE)	Part	MIL-P-60029	/1////	184.0000	GR	1.0000	0.02628600
	ETHYL CENTRALITE (0.75%)	Compound	MIL-E-255	///2,3//				
	K NITRATE (1.50%)	Compound	MIL-P-156	///2,3,4//				
	NC (57.75%)	Compound	MIL-N-244	/2/C///				
	NITROGLYCERIN (40.00%)	Compound	MIL-N-246	/1////				
8881023	CHG B PROP INCR M90	Component	MIL-I-46912				8.0000	
8881024	BAG PROP (COTTON CLOTH)	Part	MIL-C-43033	///2//			1.0000	
	PROP M9 FLAKE (PROP M9 FLAKE)	Part	MIL-P-60029	/2////	168.0000	GR	1.0000	0.19200000
	ETHYL CENTRALITE (0.75%)	Compound	MIL-E-255	///2,3//				
	K NITRATE (1.50%)	Compound	MIL-P-156	///2,3,4//				
	NC (57.75%)	Compound	MIL-N-244	/2/C///				
	NITROGLYCERIN (40.00%)	Compound	MIL-N-246	/1////				
8881025-1	BODY LOADING ASSY	Component					1.0000	
	PEP (COMP B)	Part	MIL-C-401	//A OR B///	2.1000	LB	1.0000	2.10000000
	RDX (60.00%)	Compound	MIL-R-398	///A//				
	TNT (39.00%)	Compound	MIL-T-248					
	WAX (1.00%)	Compound	MIL-W-20553					
	PEP (COMP B4) (ALT)	Part	MIL-C-46652	/2/A OR B///	2.1000	LB	1.0000	
	RDX (60.00%)	Compound	MIL-R-398	/B////				
	TNT (40.00%)	Compound	MIL-T-248	//1///				
7549011	LINER (AL ALLOY)	Part	ASTM-B209	//**///	0.0400	LB	1.0000	0.04000000
10534925	OBTURATING RING (ACETAL MOLDING)	Part	ASTM-D4181-91	//111620///	2.1960	GM	1.0000	0.00484200
10534925	OBTURATING RING (PLASTIC DELRIN 570XNC-000) (ALT)	Part	COMMERCIAL				1.0000	
10534925	OBTURATING RING (CELCON GR-20) (ALT)	Part	COMMERCIAL				1.0000	
10543025	PROJ 81MM HE MPTS ASSY	Component	MIL-P-14830				1.0000	
10543028	BODY (STEEL)	Part	ATSM-A322	//1340///	5.0500	LB	1.0000	5.05000000
10543030	BODY MULTIPIECE (ALT)	Component			5.0500	LB	1.0000	
10543031	OGIVE (STEEL)	Part	ASTM-A322	//1340///	4.7000	LB	1.0000	
10543031	OGIVE (STEEL) (ALT)	Part	ASTM-A519	//1340///	4.7000	LB	1.0000	
10535891	ADAPTER BASE (STEEL)	Part	ASTM-A576	//**///	0.3500	LB	1.0000	
10535891	ADAPTER BASE (STEEL) (ALT)	Part	ASTM-A108	//**///	0.3500	LB	1.0000	
10551954	PROJ 81MM HE MPTS ASSY (ALT)	Component	MIL-P-50649				1.0000	
10543033	BODY (PMI)	Component			5.0500	LB	1.0000	
10543034	OGIVE (PMI) (FE)	Part	MIL-C-46971		4.4200	LB	1.0000	
10535863	ADAPTER BASE (STEEL)	Part	ASTM-A576	//**///	0.3500	LB	1.0000	
10535863	ADAPTER BASE (STEEL) (ALT)	Part	ASTM-A108	//**///	0.3500	LB	1.0000	
10551951	PROJ 81MM HE MPTS ASSY (ALT)	Component	MIL-P-50560				1.0000	
10543029	BODY (STEEL)	Part	ASTM-A576		5.0500	LB	1.0000	
10543029	BODY (STEEL) (ALT)	Part	QQ-S-635		5.0500	LB	1.0000	
10543029	BODY (STEEL) (ALT)	Part	MIL-S-11310		5.0500	LB	1.0000	
10551953	BODY MULTIPIECE (ALT)	Component			5.0500	LB	1.0000	
10543032	OGIVE (STEEL)	Part	ASTM-A576		4.7000	LB	1.0000	
10543032	OGIVE (STEEL) (ALT)	Part	MIL-S-11310		4.7000	LB	1.0000	
10543032	OGIVE (STEEL) (ALT)	Part	QQ-S-635		4.7000	LB	1.0000	
10535891	ADAPTER BASE (STEEL)	Part	ASTM-A576	//**///	0.3500	LB	1.0000	
10535891	ADAPTER BASE (STEEL) (ALT)	Part	ASTM-A108	//**///	0.3500	LB	1.0000	
								8.58162700

USADACS - MIDAS DETAILED STRUCTURE FOR A MUNITION (LESS BULK ITEMS)

06/02/97

Nomenclature: CTG 81MM HE M374A2 W/O FUZE

NSN: 1315001437184 DODIC: C236 Reported Weight: 9.3400 LB

DRAWING #	NOMENCLATURE	TYPE	SPECIFICATION	TGCS	-- REPORTED --- WEIGHT	UNIT	FACTOR	FACTORED WEIGHT(LB)
9251986	CTG 81MM HE M374A2 W/O FUZE	Munition	MIL-C-46995		9.3400	LB	1.0000	
7549026	HOLDER INCREMENT (STEEL)	Part	ASTM-A109		0.0120	LB	1.0000	0.01200000
9218640	PLATE PRESSURE (AL ALLOY)	Part	ASTM-B211		0.1117	OZ	1.0000	0.00698100
7549014	LABEL WARNING (TAPE)	Part	PPP-T-60	/3//1//			1.0000	
7549014	LABEL WARNING (TAPE) (ALT)	Part	L-T-90	/1//B//			1.0000	
7549010	WASHER (ASBESTOS)	Part	MIL-G-12803	//P-1161A///			1.0000	
7549076	PLUG (AL ALLOY)	Part	QQ-A-591		0.3900	LB	1.0000	0.39000000
7549009	PLUG (AL ALLOY) (ALT)	Part	QQ-A-591		0.3900	LB	1.0000	
7549173	PRIMER PERC M71A2	Component	MIL-P-46568				1.0000	
7549176	BODY (AL ALLOY)	Part	ASTM-B211		8.0450	GM	1.0000	0.01773900
7549178	DISC CLOSING (AL FOIL)	Part	MIL-A-148	/1////			1.0000	
7549174	HEAD (AL ALLOY)	Part	ASTM-B211		6.8520	GM	1.0000	0.01510900
7549175	PLUG FIRING (AL ALLOY)	Part	ASTM-B211		0.7900	GM	1.0000	0.00174200
7549177	PELLET (BLACK PWDR CL 7)	Part	MIL-P-223	///7//	3.1200	GR	1.0000	0.00044600
	K NITRATE (74.00%)	Compound	MIL-P-156	///A//				
	S (10.40%)	Compound	MIL-S-14929	/1/COMM.///				
	CHARCOAL (15.60%)	Compound	JAN-C-178	//A///				
8840536	PRIMER PERC M35 ASSY	Component	MIL-P-46425				1.0000	
8840537	CUP (CU ALLOY)	Part	MIL-C-50	//260///			1.0000	
8840534	COVER (PAPER FOILING)	Part	MIL-P-60619	/3////			1.0000	
8840535	ANVIL (CU ALLOY)	Part	MIL-C-50	//260///			1.0000	
	PEP (PRIMER MIX #70)	Part		///1//	0.3700	GR	1.0000	0.00005300
	PB THIOCYANATE (25.00%)	Compound	MIL-L-65					
	K CHLORATE (53.00%)	Compound	MIL-P-150	//A/1//				
	SB SULFIDE (17.00%)	Compound	MIL-A-159	///1//				
	TNT (5.00%)	Compound	MIL-T-248	/1 OR 2////				
	PEP (PRIMER MIX #70 (G/G)) (ALT)	Part			48.0000	GR	1.0000	
	PB THIOCYANATE (22.50%)	Compound	MIL-L-65					
	K CHLORATE (50.50%)	Compound	MIL-P-150	//A/1//				
	SB SULFIDE (14.50%)	Compound	MIL-A-159	///1//				
	TNT (2.50%)	Compound	MIL-T-248	/1 OR 2////				
	GROUND GLASS (10.00%)	Compound	JAN-G-479	///A//				
10551892	FIN ASSY M170	Component	MIL-F-14888		0.6900	LB	1.0000	
7549027	HOLDER INCREMENT (STEEL)	Part	ASTM-A109		0.0060	LB	1.0000	0.00600000
10551922	HOUSING CTG (AL ALLOY)	Part	ASTM-B221		0.4500	LB	1.0000	0.45000000
10551922	HOUSING CTG (AL ALLOY) (ALT)	Part	ASTM-B211		0.4500	LB	1.0000	
10520199	FIN (AL ALLOY)	Part	ASTM-B221		0.2400	LB	1.0000	0.24000000
9240960	CTG IGN M285	Component	MIL-C-50261				1.0000	
8837349	DISC CLOSING (CHIPBOARD)	Part	UU-C-282				1.0000	
	PROP M9 FLAKE (PROP M9 FLAKE)	Part	MIL-P-60398	/2////	108.0000	GR	1.0000	0.01542900
	ETHYL CENTRALITE (0.75%)	Compound	MIL-E-255	///2,3//				
	K NITRATE (1.50%)	Compound	MIL-P-156	///2,3,4//				
	NC (57.75%)	Compound	MIL-N-244	/2/C///				
	NITROGLYCERIN (40.00%)	Compound	MIL-N-246	/1////				
9243225	BODY ASSY	Component					1.0000	
9243225*1	TUBE INSERT (PAPER)	Part	9243255				1.0000	
9243225*2	TUBE OUTER (PAPER)	Part	9243255				1.0000	
9235613	TUBE ASSY	Component					1.0000	
9235612	DISC (PAPER FLUORECENT)	Part	9235225				1.0000	
8837355	TUBE PAPER (PAPER)	Part	COMMERCIAL				1.0000	
8837352	COVER (PAPER ONIONSKIN)	Part	MIL-P-157				1.0000	
8837354	WASHER (CHIPBOARD)	Part	UU-C-282				1.0000	

USADACS - MIDAS DETAILED STRUCTURE FOR A MUNITION (LESS BULK ITEMS)

06/02/97

Nomenclature: CTG 81MM HE M374A2 W/O FUZE

NSN: 1315001437184 DODIC: C236 Reported Weight: 9.3400 LB

DRAWING #	NOMENCLATURE	TYPE	SPECIFICATION	TGCS	-- REPORTED --- WEIGHT	UNIT	FACTOR	FACTORED WEIGHT(LB)
9233369	CHG A PROP INCR M90A1	Component	MIL-I-14729				1.0000	
	PROP M9 FLAKE (PROP M9 FLAKE)	Part	MIL-P-60029	/1////	184.0000	GR	1.0000	0.02628600
	ETHYL CENTRALITE (0.75%)	Compound	MIL-E-255	///2,3//				
	K NITRATE (1.50%)	Compound	MIL-P-156	///2,3,4//				
	NC (57.75%)	Compound	MIL-N-244	/2/C///				
	NITROGLYCERIN (40.00%)	Compound	MIL-N-246	/1////				
9233368	BAG PROP	Component					1.0000	
9233368*1	BAG (SILK CLOTH)	Part	MIL-C-14780				1.0000	
9233368*1	BAG (ACRYLIC CLOTH) (ALT)	Part	MIL-C-12800				1.0000	
9233368*2	ACETAL (ACETAL)	Part	MIL-A-50424				1.0000	
9233371	CHG B PROP INCR M90A1	Component	MIL-I-14729				8.0000	
	PROP M9 FLAKE (PROP M9 FLAKE)	Part	MIL-P-60029	/2////	168.0000	GR	1.0000	0.19200000
	ETHYL CENTRALITE (0.75%)	Compound	MIL-E-255	///2,3//				
	K NITRATE (1.50%)	Compound	MIL-P-156	///2,3,4//				
	NC (57.75%)	Compound	MIL-N-244	/2/C///				
	NITROGLYCERIN (40.00%)	Compound	MIL-N-246	/1////				
9233370	BAG PROP	Component					1.0000	
9233370*1	BAG (SILK CLOTH)	Part	MIL-C-14780				1.0000	
9233370*1	BAG (ACRYLIC CLOTH) (ALT)	Part	MIL-C-12800				1.0000	
9233370*2	ACETAL (ACETAL)	Part	MIL-A-50424				1.0000	
8881025-3	BODY LOADING ASSY	Component					1.0000	
	PEP (COMP B)	Part	MIL-C-401	//A OR B///	2.1000	LB	1.0000	2.10000000
	RDX (60.00%)	Compound	MIL-R-398	///A//				
	TNT (39.00%)	Compound	MIL-T-248					
	WAX (1.00%)	Compound	MIL-W-20553					
	PEP (COMP B4) (ALT)	Part	MIL-C-46652	/2/A OR B///	2.1000	LB	1.0000	
	RDX (60.00%)	Compound	MIL-R-398	/B////				
	TNT (40.00%)	Compound	MIL-T-248	//1///				
7549011	LINER (AL ALLOY)	Part	ASTM-B209	//**///	0.0400	LB	1.0000	0.04000000
10534925	OBTURATING RING (ACETAL MOLDING)	Part	ASTM-D4181-91	//111620///	2.1960	GM	1.0000	0.00484200
10534925	OBTURATING RING (PLASTIC DELRIN 570XNC-000) (ALT)	Part	COMMERCIAL				1.0000	
10534925	OBTURATING RING (CELCON GR-20) (ALT)	Part	COMMERCIAL				1.0000	
10543025	PROJ 81MM HE MPTS ASSY	Component	MIL-P-14830				1.0000	
10543028	BODY (STEEL)	Part	ATSM-A322	//1340///	5.0500	LB	1.0000	5.05000000
10543030	BODY MULTIPIECE (ALT)	Component			5.0500	LB	1.0000	
10543031	OGIVE (STEEL)	Part	ASTM-A322	//1340///	4.7000	LB	1.0000	
10543031	OGIVE (STEEL) (ALT)	Part	ASTM-A519	//1340///	4.7000	LB	1.0000	
10535891	ADAPTER BASE (STEEL)	Part	ASTM-A576	//**///	0.3500	LB	1.0000	
10535891	ADAPTER BASE (STEEL) (ALT)	Part	ASTM-A108	//**///	0.3500	LB	1.0000	
10551954	PROJ 81MM HE MPTS ASSY (ALT)	Component	MIL-P-50649				1.0000	
10543033	BODY (PMI)	Component			5.0500	LB	1.0000	
10543034	OGIVE (PMI) (FE)	Part	MIL-C-46971		4.4200	LB	1.0000	
10535863	ADAPTER BASE (STEEL)	Part	ASTM-A576	//**///	0.3500	LB	1.0000	
10535863	ADAPTER BASE (STEEL) (ALT)	Part	ASTM-A108	//**///	0.3500	LB	1.0000	
10551951	PROJ 81MM HE MPTS ASSY (ALT)	Component	MIL-P-50560				1.0000	
10543029	BODY (STEEL)	Part	ASTM-A576		5.0500	LB	1.0000	
10543029	BODY (STEEL) (ALT)	Part	QQ-S-635		5.0500	LB	1.0000	
10543029	BODY (STEEL) (ALT)	Part	MIL-S-11310		5.0500	LB	1.0000	
10551953	BODY MULTIPIECE (ALT)	Component			5.0500	LB	1.0000	
10543032	OGIVE (STEEL)	Part	ASTM-A576		4.7000	LB	1.0000	
10543032	OGIVE (STEEL) (ALT)	Part	MIL-S-11310		4.7000	LB	1.0000	
10543032	OGIVE (STEEL) (ALT)	Part	QQ-S-635		4.7000	LB	1.0000	
10535891	ADAPTER BASE (STEEL)	Part	ASTM-A576	//**///	0.3500	LB	1.0000	

USADACS - MIDAS DETAILED STRUCTURE FOR A MUNITION (LESS BULK ITEMS)

06/02/97

Nomenclature: CTG 81MM HE M374A2 W/O FUZE

NSN: 1315001437184 DODIC: C236 Reported Weight: 9.3400 LB

DRAWING #	NOMENCLATURE	TYPE	SPECIFICATION	TGCS	-- REPORTED --- WEIGHT	UNIT	FACTOR	FACTORED WEIGHT(LB)
10535891	ADAPTER BASE (STEEL) (ALT)	Part	ASTM-A108	//**///	0.3500	LB	1.0000	
								8.56862700

06/09/97

USADACS - MIDAS DETAILED STRUCTURE FOR A MUNITION (LESS BULK ITEMS)

Nomenclature: CTG 81MM HE M374A3 W/FUZE PD M567

NSN: 1315005637067 DODIC: C256 Reported Weight: 9.5000 LB

DRAWING #	NOMENCLATURE	TYPE	SPECIFICATION	TGCS	-- REPORTED --- WEIGHT	UNIT	FACTOR	FACTORED WEIGHT(LB)
9241291	CTG 81MM HE M374A3 W/FUZE PD M567	Munition	MIL-C-48171		9.5000	LB	1.0000	
9293422	CTG IGN M299	Component	MIL-C-48156				1.0000	
9293426	PLUG FIRING (AL ALLOY)	Part	ASTM-B211	//2024-T4///	0.8900	GM	1.0000	0.00196200
9293426	PLUG FIRING (AL ALLOY) (ALT)	Part	ASTM-B221	//2024-T4///	0.8900	GM	1.0000	
9293427	HEAD (AL ALLOY)	Part	ASTM-B211	//2024-T4///	26.4100	GM	1.0000	0.05823400
9293427	HEAD (AL ALLOY) (ALT)	Part	ASTM-B221	//2024-T4///	26.4100	GM	1.0000	
9293425	LINER (PAPER CTG)	Part	9243255				1.0000	
9293428	BODY (AL ALLOY)	Part	ASTM-B211	//2024-T4///	13.2700	GM	1.0000	0.02926000
7549177	PELLET (BLACK PWDR CL 7)	Part	MIL-P-223	///7//	3.1200	GR	1.0000	0.00044600
	K NITRATE (74.00%)	Compound	MIL-P-156	///A//				
	S (10.40%)	Compound	MIL-S-14929	/1/COMM.//				
	CHARCOAL (15.60%)	Compound	JAN-C-178	//A//				
	PROP M9 FLAKE (PROP M9 FLAKE)	Part	MIL-P-60398	/2////	115.0000	GR	1.0000	0.01642900
	ETHYL CENTRALITE (0.75%)	Compound	MIL-E-255	///2,3//				
	K NITRATE (1.50%)	Compound	MIL-P-156	///2,3,4//				
	NC (57.75%)	Compound	MIL-N-244	/2/C//				
	NITROGLYCERIN (40.00%)	Compound	MIL-N-246	/1////				
9280537	CAP (AL ALLOY)	Part	ASTM-B221				1.0000	
9280537	CAP (AL ALLOY) (ALT)	Part	ASTM-B211				1.0000	
8840536	PRIMER PERC M35 ASSY	Component	MIL-P-46425				1.0000	
8840537	CUP (CU ALLOY)	Part	MIL-C-50	//260//			1.0000	
8840534	COVER (PAPER FOILING)	Part	MIL-P-60619	/3////			1.0000	
8840535	ANVIL (CU ALLOY)	Part	MIL-C-50	//260//			1.0000	
	PEP (PRIMER MIX #70)	Part		///1//	0.3700	GR	1.0000	0.00005300
	PB THIOCYANATE (25.00%)	Compound	MIL-L-65					
	K CHLORATE (53.00%)	Compound	MIL-P-150	//A/1//				
	SB SULFIDE (17.00%)	Compound	MIL-A-159	///1//				
	TNT (5.00%)	Compound	MIL-T-248	/1 OR 2////				
	PEP (PRIMER MIX #70 (G/G)) (ALT)	Part			48.0000	GR	1.0000	
	PB THIOCYANATE (22.50%)	Compound	MIL-L-65					
	K CHLORATE (50.50%)	Compound	MIL-P-150	//A/1//				
	SB SULFIDE (14.50%)	Compound	MIL-A-159	///1//				
	TNT (2.50%)	Compound	MIL-T-248	/1 OR 2////				
	GROUND GLASS (10.00%)	Compound	JAN-G-479	///A//				
9285390	TUBE ASSY	Component					1.0000	
9345251	TUBING HEAT SHRINK (POLYOLEFIN)	Part	COMMERCIAL				1.0000	
9285355	TUBE PAPER (PAPER)	Part	9243255				1.0000	
9293423	FLASH TUBE ASSY	Component					1.0000	
9293424	TUBE FLASH (AL ALLOY)	Part	ASTM-B210	//2024-T3///			1.0000	
9293424	TUBE FLASH (AL ALLOY) (ALT)	Part	ASTM-B221	//2024-T3///	4.5000	GM	1.0000	
9345250	TUBING HEAT SHRINK (POLYOLEFIN)	Part	COMMERCIAL				1.0000	
MS9390-304	PIN (STEEL)	Part	AMS-5735		1.2800	GR	1.0000	0.00018300
9297909	PIN (AL ALLOY) (ALT)	Part	ASTM-B211	//2024-T4///	0.4500	GR	1.0000	
9395613	PRIMER PERC #150 (ALT)	Component	MIL-P-46610		5.0000	GR	1.0000	
	PEP (PRIMER MIX K-75)	Part	COMMERCIAL		0.5000	GR	1.0000	
	PB STYPHNATE (39.00%)	Compound	MIL-L-16355					
	TETRACENE (3.00%)	Compound	MIL-T-46938					
	BA NITRATE (41.00%)	Compound	MIL-B-162					
	SB SULFIDE (19.00%)	Compound	MIL-A-159					
	NC (6.00%)	Compound	MIL-N-244					
P445	CUP PRIMER (BRS)	Part	COMMERCIAL		175.0000	MG	1.0000	
P369	ANVIL (BRS)	Part	COMMERCIAL		85.0000	MG	1.0000	

USADACS - MIDAS DETAILED STRUCTURE FOR A MUNITION (LESS BULK ITEMS)

06/09/97

Nomenclature: CTG 81MM HE M374A3 W/FUZE PD M567

NSN: 1315005637067 DODIC: C256 Reported Weight: 9.5000 LB

DRAWING #	NOMENCLATURE	TYPE	SPECIFICATION	TGCS	-- REPORTED --- WEIGHT	UNIT	FACTOR	FACTORED WEIGHT(LB)
9395613*1	DISC (KRAFT PAPER)	Part	COMMERCIAL				1.0000	
11726889	FIN ASSY M24	Component	MIL-F-48425				1.0000	
11726795	HOUSING (AL ALLOY)	Part	ASTM-B247	//7076-T6///			1.0000	
11726795	HOUSING (AL ALLOY) (ALT)	Part	ASTM-B221	//7076-T6///			1.0000	
11726795	HOUSING (AL ALLOY) (ALT)	Part	ASTM-B211	//7076-T6///			1.0000	
11726683	FIN (AL ALLOY)	Part	ASTM-B221		0.1952	LB	1.0000	0.19520000
9280588	CHG PROP M205	Component	MIL-P-48881		0.0560	LB	4.0000	
	PROP M10 FLAKE (PROP M10 FLAKE*)	Part	MIL-P-48130		392.0000	GR	1.0000	0.22400400
	NC (97.58%)	Compound	MIL-N-244	/1/C///				
	K SULFATE (1.10%)	Compound	MIL-P-193	/1////				
	DIPHENYLAMINE (1.10%)	Compound	MIL-D-98					
	GRAPHITE GLAZE, MAX (0.22%)	Compound						
9278773	CONTAINER ASSY	Component	MIL-C-48882		4.6300	GM	1.0000	
9278775	CONTAINER BOTTOM (COMPOSITION NC PAPER)	Part	9381562		2.3150	GM	1.0000	0.02042000
	NC (78.00%)	Compound	MIL-N-244	/1/A///				
	DIPHENYLAMINE (1.00%)	Compound	MIL-D-98					
	RESIN & ADDITIVES (7.00%)	Compound	COMMERCIAL					
	FIBER CRAFT (3.75%)	Compound	MIL-C-50269					
	FIBER ACRYLIC (3.75%)	Compound	9235668					
	FIBER POLYESTER (6.50%)	Compound	9279014					
9278744	CONTAINER TOP (COMPOSITION NC PAPER)	Part	9381562		2.3150	GM	1.0000	0.02042000
	NC (78.00%)	Compound	MIL-N-244	/1/A///				
	DIPHENYLAMINE (1.00%)	Compound	MIL-D-98					
	RESIN & ADDITIVES (7.00%)	Compound	COMMERCIAL					
	FIBER CRAFT (3.75%)	Compound	MIL-C-50269					
	FIBER ACRYLIC (3.75%)	Compound	9235668					
	FIBER POLYESTER (6.50%)	Compound	9279014					
9312786	CLOSURE (COMPOSITION NC PAPER)	Part	9277371		0.0030	GM	1.0000	0.00002800
	NC (71.00%)	Compound	MIL-N-244	/1/A///				
	DIPHENYLAMINE (1.00%)	Compound	MIL-D-98					
	RESIN & ADDITIVES (7.00%)	Compound	COMMERCIAL					
	FIBER CRAFT (10.75%)	Compound	MIL-C-50269					
	FIBER ACRYLIC (3.75%)	Compound	9235668					
	FIBER POLYESTER (6.50%)	Compound	9279014					
9381565	CONTAINER ASSY PAPER (ALT)	Component	MIL-C-70474		4.6300	GM	1.0000	
9381563	CONTAINER BOTTOM PAPER (COMPOSITION NC PAPER)	Part	9381562		2.3150	GM	1.0000	
	NC (78.00%)	Compound	MIL-N-244	/1/A///				
	DIPHENYLAMINE (1.00%)	Compound	MIL-D-98					
	RESIN & ADDITIVES (7.00%)	Compound	COMMERCIAL					
	FIBER CRAFT (3.75%)	Compound	MIL-C-50269					
	FIBER ACRYLIC (3.75%)	Compound	9235668					
	FIBER POLYESTER (6.50%)	Compound	9279014					
9381564	CONTAINER TOP PAPER (COMPOSITION NC PAPER)	Part	9381562		2.3150	GM	1.0000	
	NC (78.00%)	Compound	MIL-N-244	/1/A///				
	DIPHENYLAMINE (1.00%)	Compound	MIL-D-98					
	RESIN & ADDITIVES (7.00%)	Compound	COMMERCIAL					
	FIBER CRAFT (3.75%)	Compound	MIL-C-50269					
	FIBER ACRYLIC (3.75%)	Compound	9235668					
	FIBER POLYESTER (6.50%)	Compound	9279014					
8881025-4	BODY LOADING ASSY	Component					1.0000	
	PEP (COMP B)	Part	MIL-C-401	//A OR B///	2.1000	LB	1.0000	2.10000000
	RDX (60.00%)	Compound	MIL-R-398	///A//				
	TNT (39.00%)	Compound	MIL-T-248					

USADACS - MIDAS DETAILED STRUCTURE FOR A MUNITION (LESS BULK ITEMS)

Nomenclature: CTG 81MM HE M374A3 W/FUZE PD M567
NSN: 1315005637067 DODIC: C256 Reported Weight: 9.5000 LB

DRAWING #	NOMENCLATURE	TYPE	SPECIFICATION	TGCS	-- REPORTED --- WEIGHT	UNIT	FACTOR	FACTORED WEIGHT(LB)
	WAX (1.00%)	Compound	MIL-W-20553					
	PEP (COMP B4) (ALT)	Part	MIL-C-46652	/2/A OR B///	2.1000	LB	1.0000	
	RDX (60.00%)	Compound	MIL-R-398	/B////				
	TNT (40.00%)	Compound	MIL-T-248	//1///				
7549011	LINER (AL ALLOY)	Part	ASTM-B209	//**///	0.0400	LB	1.0000	0.04000000
10534925	OBTURATING RING (ACETAL MOLDING)	Part	ASTM-D4181-91	//111620///	2.1960	GM	1.0000	0.00484200
10534925	OBTURATING RING (PLASTIC DELRIN 570XNC-000) (ALT)	Part	COMMERCIAL				1.0000	
10534925	OBTURATING RING (CELCON GR-20) (ALT)	Part	COMMERCIAL				1.0000	
10543025	PROJ 81MM HE MPTS ASSY	Component	MIL-P-14830				1.0000	
10543028	BODY (STEEL)	Part	ATSM-A322	//1340///	5.0500	LB	1.0000	5.05000000
10543030	BODY MULTIPIECE (ALT)	Component			5.0500	LB	1.0000	
10543031	OGIVE (STEEL)	Part	ASTM-A322	//1340///	4.7000	LB	1.0000	
10543031	OGIVE (STEEL) (ALT)	Part	ASTM-A519	//1340///	4.7000	LB	1.0000	
10535891	ADAPTER BASE (STEEL)	Part	ASTM-A576	//**///	0.3500	LB	1.0000	
10535891	ADAPTER BASE (STEEL) (ALT)	Part	ASTM-A108	//**///	0.3500	LB	1.0000	
10551954	PROJ 81MM HE MPTS ASSY (ALT)	Component	MIL-P-50649				1.0000	
10543033	BODY (PMI)	Component			5.0500	LB	1.0000	
10543034	OGIVE (PMI) (FE)	Part	MIL-C-46971		4.4200	LB	1.0000	
10535863	ADAPTER BASE (STEEL)	Part	ASTM-A576	//**///	0.3500	LB	1.0000	
10535863	ADAPTER BASE (STEEL) (ALT)	Part	ASTM-A108	//**///	0.3500	LB	1.0000	
10551951	PROJ 81MM HE MPTS ASSY (ALT)	Component	MIL-P-50560				1.0000	
10543029	BODY (STEEL)	Part	ASTM-A576		5.0500	LB	1.0000	
10543029	BODY (STEEL) (ALT)	Part	QQ-S-635		5.0500	LB	1.0000	
10543029	BODY (STEEL) (ALT)	Part	MIL-S-11310		5.0500	LB	1.0000	
10551953	BODY MULTIPIECE (ALT)	Component			5.0500	LB	1.0000	
10543032	OGIVE (STEEL)	Part	ASTM-A576		4.7000	LB	1.0000	
10543032	OGIVE (STEEL) (ALT)	Part	MIL-S-11310		4.7000	LB	1.0000	
10543032	OGIVE (STEEL) (ALT)	Part	QQ-S-635		4.7000	LB	1.0000	
10535891	ADAPTER BASE (STEEL)	Part	ASTM-A576	//**///	0.3500	LB	1.0000	
10535891	ADAPTER BASE (STEEL) (ALT)	Part	ASTM-A108	//**///	0.3500	LB	1.0000	
9246242	FUZE PD M567	Component	MIL-F-50945		1.3000	LB	1.0000	
9246234	PAD FELT (WOOL FELT)	Part	C-F-206	/1//12-R3//			1.0000	
9255163	PELLET BOOSTER (PELLET EXPL COMP)	Part	MIL-P-48395	/6A OR B////	23.3740	GM	1.0000	0.05154000
	RDX (98.50%)	Compound	MIL-R-398					
	STEARIC ACID (1.50%)	Compound	MIL-S-271					
9255174	DISC BOOSTER CLOSING (AL ALLOY)	Part	ASTM-B209	///1100//			1.0000	
9246215	BODY REAR (AL ALLOY)	Part	QQ-A-591	//A360///			1.0000	
9246238	SUPPORT AFT (PLASTIC)	Part	L-P-410				1.0000	
MS28775-212	O-RING (RUBBER)	Part	MIL-P-25732				1.0000	
9239270	BOOSTER AUX M122 ASSY	Component					1.0000	
9239271	CUP AUX BOOSTER (AL ALLOY)	Part	ASTM-B209	///1100//			1.0000	
	PEP (COMP A5 (RDX 98.5%))	Part	MIL-E-14970	///1 OR 2//	2310.0000	MG	1.0000	0.00509400
	RDX (98.50%)	Compound	MIL-R-398					
	STEARIC ACID (1.50%)	Compound	MIL-S-271					
9239270*1	TAPE PRESSURE SENSITIVE (AL TAPE)	Part	L-T-80				1.0000	
9246241	BODY ASSY FRONT M567	Component					1.0000	
9246256	SPRING SLIDER INNER (SPRING STEEL)	Part	ASTM-A228				1.0000	
9246223	RING SELECTOR (STAINLESS STEEL)	Part	ASTM-A167	/302////			1.0000	
9246264	PLUG RETAINING (AL ALLOY)	Part	ASTM-B211	//2024-T4///			1.0000	
MS28775-015	O-RING (RUBBER)	Part	MIL-P-25732				1.0000	
MS28775-024	O-RING (RUBBER)	Part	MIL-P-25732				1.0000	
9246222	CAP SELECTOR (PLASTIC)	Part	ASTM-D3935-87				1.0000	
9246236	SPRING SLIDER OUTER (SPRING STEEL)	Part	ASTM-A228				1.0000	

USADACS - MIDAS DETAILED STRUCTURE FOR A MUNITION (LESS BULK ITEMS)

Nomenclature: CTG 81MM HE M374A3 W/FUZE PD M567
NSN: 1315005637067 DODIC: C256 Reported Weight: 9.5000 LB

DRAWING #	NOMENCLATURE	TYPE	SPECIFICATION	TGCS	-- REPORTED --- WEIGHT	UNIT	FACTOR	FACTORED WEIGHT(LB)
9246239	WINDSHIELD (AL ALLOY)	Part	ASTM-B209	//1100-0///			1.0000	
9298875	LABEL WARNING (TAPE)	Part	PPP-T-60	/3//1//			1.0000	
9298875	LABEL WARNING (TAPE) (ALT)	Part	L-T-90	/1//1//			1.0000	
9234683	LEAD ASSY	Component					1.0000	
	PEP (RDX)	Part	MIL-R-398	/A OR B//C//	140.0000	MG	1.0000	0.00030900
	RDX (100.00%)	Compound	MIL-R-398	/A OR B//C//				
9234684	CUP LEAD (STAINLESS STEEL)	Part	ASTM-A167	/305////			1.0000	
9234683*1	TAPE PRESSURE SENSITIVE (AL TAPE)	Part	L-T-80				1.0000	
9246272	SLIDER LOADED ASSY	Component					1.0000	
9234579	DETONATOR STAB DELAY M76	Component	MIL-D-50998				1.0000	
9234582	BODY (STAINLESS WIRE)	Part	MIL-W-52263	///303//			1.0000	
9234580	DISC DETONATOR (STAINLESS STEEL)	Part	QQ-S-766	///302//			1.0000	
9234580	DISC DETONATOR (STAINLESS STEEL) (ALT)	Part	QQ-S-766	///305//			1.0000	
9255155	DISC CLOSING (STAINLESS STEEL)	Part	QQ-S-766	///302//			1.0000	
9255155	DISC CLOSING (STAINLESS STEEL) (ALT)	Part	QQ-S-766	///305//			1.0000	
	PEP (RDX)	Part	MIL-R-398	/B//C//	70.0000	MG	1.0000	0.00015400
	RDX (100.00%)	Compound	MIL-R-398	/B//C//				
	PEP (PB AZIDE)	Part	MIL-L-46225		82.0000	MG	1.0000	0.00018100
	PB AZIDE (100.00%)	Compound	MIL-L-46225					
	DELAY COMP (DELAY COMP)	Part	9234579		25.0000	MG	1.0000	0.00005500
	BA CHROMATE (86.00%)	Compound	MIL-B-550	//A///				
	B AMORPHOUS (14.00%)	Compound	MIL-B-51092					
9234581	DISC FLASH SEPARATOR (STAINLESS STEEL)	Part	QQ-S-763	/302////			1.0000	
9234581	DISC FLASH SEPARATOR (STEEL) (ALT)	Part	ASTM-A366				1.0000	
	IGN PWDR A1A (IGN PWDR A1A)	Part	MIL-P-22264		42.0000	MG	1.0000	0.00009300
	ZR PWDR (65.00%)	Compound	MIL-Z-399	/2//1//				
	FE OXIDE (25.00%)	Compound	MIL-I-706	/1//2//				
	DIATOMACEOUS EARTH (10.00%)	Compound	MIL-D-20550					
	PRIMER MIX PA-100 (PRIMER MIX PA-100)	Part			32.0000	MG	1.0000	0.00007100
	K CHLORATE (53.00%)	Compound	MIL-P-150	//A/2//				
	PB THIOCYANATE (25.00%)	Compound	MIL-L-65					
	SB SULFIDE (17.00%)	Compound	MIL-A-159	///2//				
	PB AZIDE (5.00%)	Compound	MIL-L-3055	/1////				
9243921	DETONATOR STAB M98	Component	MIL-D-50420				1.0000	
9243920	CUP DETONATOR (STAINLESS STEEL)	Part	QQ-S-766	///305//			1.0000	
9243919	DISC DETONATOR CLOSING (STAINLESS STEEL)	Part	QQ-S-766	///302//			1.0000	
9243918	DISC DETONATOR (STAINLESS STEEL)	Part	QQ-S-766	///302//			1.0000	
	PEP (RDX)	Part	MIL-R-398		75.0000	MG	1.0000	0.00016500
	RDX (100.00%)	Compound	MIL-R-398					
	PEP (RDX PELLET (GRAPH GR A OR B)) (ALT)	Part	MIL-P-48395		75.0000	MG	1.0000	
	RDX (98.00%)	Compound	MIL-R-398					
	CA RESINATE (1.00%)	Compound	MIL-C-20470	/2////				
	GRAPHITE (1.00%)	Compound	MIL-G-155	//A OR B///				
	PEP (PB AZIDE)	Part	MIL-L-46225		95.0000	MG	1.0000	0.00020900
	PB AZIDE (100.00%)	Compound	MIL-L-46225					
	PEP (PB AZIDE) (ALT)	Part	MIL-L-14758		95.0000	MG	1.0000	
	PB AZIDE (100.00%)	Compound	MIL-L-14758					
	PEP (PRIMER MIX NOL #130*10)	Part			15.0000	MG	1.0000	0.00003300
	PB STYPHNATE (40.00%)	Compound	MIL-L-16355	/1OR2////				
	SB SULFIDE (15.00%)	Compound	MIL-A-159	///5//				
	BA NITRATE (20.00%)	Compound	MIL-B-162	///1//				
	PB AZIDE (20.00%)	Compound	MIL-L-3055	/1////				
	TETRACENE (5.00%)	Compound	MIL-T-46938					

USADACS - MIDAS DETAILED STRUCTU. OR A MUNITION (LESS BULK ITEMS)

Nomenclature: CTG 81MM HE M374A3 W/FUZE PD M567
NSN: 1315005637067 DODIC: C256 Reported Weight: 9.5000 LB

DRAWING #	NOMENCLATURE	TYPE	SPECIFICATION	TGCS	-- REPORTED --- WEIGHT	UNIT	FACTOR	FACTORED WEIGHT(LB)
9246273	SLIDER ASSY	Component					1.0000	
9246221	SLIDER (ZN ALLOY)	Part	ASTM-B86	//AC41A///			1.0000	
9246216	PLATE END SLIDER (ZN ALLOY)	Part	ASTM-B86	//AC41A///			1.0000	
9246255	SPRING SLIDER DETENT (SPRING STEEL)	Part	ASTM-A228				1.0000	
9246231	DETENT SLIDER (STAINLESS STEEL)	Part	ASTM-A581	/303////			1.0000	
9246231	DETENT SLIDER (STAINLESS STEEL) (ALT)	Part	ASTM-A581	/303SE////			1.0000	
9246231	DETENT SLIDER (STAINLESS STEEL) (ALT)	Part	ASTM-A582				1.0000	
9246240	BODY SUBASSY FRONT	Component					1.0000	
9246261	O-RING (RUBBER)	Part	MIL-P-25732				1.0000	
9246260	DISK (AL ALLOY)	Part	ASTM-B209	//6061-T6///			1.0000	
MS51923-185	PIN SPRING TUBULAR (STAINLESS STEEL)	Part	MIL-P-10971	//**///			1.0000	
9246218	BODY OUTER FRONT (AL ALLOY)	Part	MIL-A-12545	//6061-T6///			1.0000	
9246218	BODY OUTER FRONT (AL ALLOY) (ALT)	Part	ASTM-B247	//6061-T6///			1.0000	
9246218	BODY OUTER FRONT (AL ALLOY) (ALT)	Part	MIL-A-12545	//6262-T9///			1.0000	
9246218	BODY OUTER FRONT (AL ALLOY) (ALT)	Part	ASTM-B211	//6262-T9///			1.0000	
9246218	BODY OUTER FRONT (AL ALLOY) (ALT)	Part	ASTM-B211	//6061-T6///			1.0000	
MS16629-1106	RING RETAINING (STEEL)	Part	ASTM-A568	//**///			1.0000	
MS16629-1106	RING RETAINING (STEEL) (ALT)	Part	ASTM-A682	//**///			1.0000	
MS16629-2106	RING RETAINING (STEEL) (ALT)	Part	ASTM-A568	//**///			1.0000	
MS16629-2106	RING RETAINING (STEEL) (ALT)	Part	ASTM-A682	//**///			1.0000	
9246227	SPRING SETBACK PIN (SPRING STEEL)	Part	ASTM-A228				2.0000	
MS19060-20	BALL BEARING (STAINLESS STEEL)	Part	ASTM-A276				2.0000	
9246230	STRIKER (STAINLESS STEEL)	Part	ASTM-A581				1.0000	
9246230	STRIKER (STAINLESS STEEL) (ALT)	Part	ASTM-A582				1.0000	
9246226	PIN SETBACK (STAINLESS STEEL)	Part	ASTM-A276	/440C////			2.0000	
9246262	INNER BODY ASSY	Component					1.0000	
9349541	PIN GROOVED (STAINLESS STEEL)	Part	COMMERCIAL				1.0000	
9246254	SPACER FRONT BODY (AL ALLOY)	Part	ASTM-B209	//6061-T6///			1.0000	
9246246	DELAY ASSY	Component					1.0000	
9246247	HOLDER DELAY ELEMENT (ZN ALLOY)	Part	ASTM-B86	//AG40A///			1.0000	
9246248	DELAY ELEMENT M53 ASSY	Component					1.0000	
9255164	BODY (AL ALLOY)	Part	ASTM-B211	//2011-T3///			1.0000	
9246249	PIN ARMING (STAINLESS STEEL)	Part	ASTM-A581	/416////			1.0000	
9246249	PIN ARMING (STAINLESS STEEL) (ALT)	Part	ASTM-A581	/416SE////			1.0000	
9246249	PIN ARMING (STAINLESS STEEL) (ALT)	Part	ASTM-A582	/416////			1.0000	
9246249	PIN ARMING (STAINLESS STEEL) (ALT)	Part	ASTM-A582	/416SE////			1.0000	
9236202	RING (AL ALLOY)	Part	ASTM-B211	//**///			1.0000	
9236202	RING (AL ALLOY) (ALT)	Part	ASTM-B209	//2024-T3///			1.0000	
9236202	RING (AL ALLOY) (ALT)	Part	ASTM-B209	//2024-T4///			1.0000	
	DELAY MATERIAL (DELAY MATERIAL)	Part	9255175-2		180.0000	MG	1.0000	0.00039700
	BA CHROMATE (52.00%)	Compound	MIL-B-550	//A///				
	K PERCHLORATE (12.30%)	Compound	MIL-P-217	//A/4//				
	ZR-NI ALLOY (23.00%)	Compound	MIL-Z-11410	/2////				
	RAREOX (9.70%)	Compound	COMMERCIAL					
	ZR-NI ALLOY (3.00%)	Compound	MIL-Z-11410	/1////				
	DELAY MATERIAL (DELAY MATERIAL)	Part	9255175-1		63.0000	MG	1.0000	0.00013900
	BA CHROMATE (61.70%)	Compound	MIL-B-550	//A///				
	K PERCHLORATE (12.30%)	Compound	MIL-P-217	//A/4//				
	ZR-NI ALLOY (23.00%)	Compound	MIL-Z-11410	/2////				
	ZR-NI ALLOY (3.00%)	Compound	MIL-Z-11410	/1////				
	PYROTECHNIC MIX (PYROTECHNIC MIX)	Part	9231375		16.0000	MG	1.0000	0.00003500
	PB STYPHNATE (40.00%)	Compound	MIL-L-16355					
	RED LEAD OXIDE (43.98%)	Compound	TT-R-191					

USADACS - MIDAS DETAILED STRUCTURE FOR A MUNITION (LESS BULK ITEMS)

Nomenclature: CTG 81MM HE M374A3 W/FUZE PD M567
NSN: 1315005637067 DODIC: C256 Reported Weight: 9.5000 LB

DRAWING #	NOMENCLATURE	TYPE	SPECIFICATION	TGCS	-- REPORTED --- WEIGHT	UNIT	FACTOR	FACTORED WEIGHT(LB)
	SILICON (11.01%)	Compound	MIL-S-230					
	ETHYL CENTRALITE (0.10%)	Compound	MIL-E-255	///2//				
	NC (4.91%)	Compound	MIL-N-244	/1 OR 2/A///				
	IGN PWDR F33B (IGN PWDR F33B)	Part	MIL-P-71093		72.0000	MG	1.0000	0.00015900
	ZR PWDR (41.00%)	Compound	MIL-Z-399	/2//1//				
	FE OXIDE (49.00%)	Compound	MIL-I-706	/1//2//				
	DIATOMACEOUS EARTH (10.00%)	Compound	MIL-D-20550					
9246248*1	TAPE PRESSURE SENSITIVE (AL TAPE)	Part	L-T-80				1.0000	
9208229	PRIMER & HOLDER ASSY	Component					1.0000	
9208228	HOLDER PRIMER (AL ALLOY)	Part	ASTM-B211	//**///			1.0000	
8840607	PRIMER PERC M54 ASSY	Component					1.0000	
8840604	CUP (CU ALLOY)	Part	MIL-C-21768	//220///			1.0000	
8840605	ANVIL (BRS)	Part	QQ-B-626	//360///			1.0000	
8840605	ANVIL (BRS) (ALT)	Part	QQ-B-613	//268///			1.0000	
8840605	ANVIL (BRS) (ALT)	Part	QQ-B-613	//260///			1.0000	
8840605	ANVIL (BRS WIRE) (ALT)	Part	QQ-W-321	//270///			1.0000	
	PEP (PRIMER MIX #70)	Part			8.5000	MG	1.0000	0.00001900
	PB THIOCYANATE (25.00%)	Compound	MIL-L-65					
	K CHLORATE (53.00%)	Compound	MIL-P-150	//A/1//				
	SB SULFIDE (17.00%)	Compound	MIL-A-159					
	TNT (5.00%)	Compound	MIL-T-248	/1 OR 2////				
9299421	INNER BODY SUBASSY	Component					1.0000	
9246232	LATCH SAFETY (ZN ALLOY)	Part	ASTM-B86	//AC41A///			1.0000	
9246219	BODY INNER RIGHT HALF (ZN ALLOY)	Part	ASTM-B86	//AG40A///			1.0000	
MS16562-190	PIN SPRING TUBULAR (STAINLESS STEEL)	Part	MIL-P-10971	/410////			1.0000	
MS16562-190	PIN SPRING TUBULAR (STAINLESS STEEL) (ALT)	Part	MIL-P-10971	/420////			1.0000	
MS39086-100	PIN SPRING TUBULAR (STAINLESS STEEL) (ALT)	Part	MIL-P-10971	/**////			1.0000	
9299420	BODY INNER LEFT HALF ASSY	Component					1.0000	
9246270	SLEEVE LEAD CUP (STAINLESS STEEL)	Part	ASTM-A581	/416////			1.0000	
9246270	SLEEVE LEAD CUP (STAINLESS STEEL) (ALT)	Part	ASTM-A582	/416////			1.0000	
9246220	BODY INNER LEFT HALF (ZN ALLOY)	Part	ASTM-B86	//AG40A///			1.0000	
9246244	FIRING PIN ASSY	Component					1.0000	
9246225	SPRING FIRING PIN (SPRING STEEL)	Part	ASTM-A228				1.0000	
9299424	PIN FIRING SUBASSY	Component					1.0000	
9299423	PIN FIRING POINT (STAINLESS STEEL)	Part	ASTM-A581	/XM-3////			1.0000	
9299423	PIN FIRING POINT (STAINLESS STEEL) (ALT)	Part	ASTM-A581	/303////			1.0000	
9299423	PIN FIRING POINT (STAINLESS STEEL) (ALT)	Part	ASTM-A582				1.0000	
9299422	PIN FIRING HOLDER (AL ALLOY)	Part	ASTM-B211	//**///			1.0000	
9246235	PULL WIRE ASSY	Component					1.0000	
9246235-1	PULL WIRE (STEEL)	Part	ASTM-A227	///2//			1.0000	
9246235-2	PIN (STEEL)	Part	ASTM-A227				1.0000	
								7.82013400

*431	*Component	*8797551	----------FRONT FRAME LOCK & TRIGGER ASSY	*0.00
*432	*Part	*8797552	----------FRAME FRONT (BRASS)	*0.00
*433	*Part	*8797552	----------FRAME FRONT (BRASS) (ALT)	*0.00
*434	*Part	*8797553	----------LINK LOCKING (BRASS)	*0.00
*435	*Part	*8797553	----------LINK LOCKING (BRASS) (ALT)	*0.00
*436	*Part	*8797554	----------PIN LINK STOP (BRASS)	*0.00
*437	*Part	*8797554	PIN LINK STOP (STAINLESS STEEL) (ALT)	*0.00
*438	*Part	*8797555	----------TRIGGER (BRASS)	*0.00
*439	*Part	*8797556	----------SHAFT TRIGGER (STAINLESS WIRE)	*1.70 GR
*440	*Part	*8797556	SHAFT TRIGGER (STAINLESS WIRE) (ALT)	*1.70 GR
*441	*Part	*8797556	SHAFT TRIGGER (STAINLESS STEEL) (ALT)	*1.70 GR
*442	*Part	*8797556	SHAFT TRIGGER (STAINLESS STEEL) (ALT)	*1.70 GR
*443	*Part	*8797557	STUD LOCKING LINK (STAINLESS WIRE)	*0.77 GR
*444	*Part	*8797557	STUD LOCKING LINK (STAINLESS STEEL) (ALT)	*0.77 GR
*445	*Part	*8797557	STUD LOCKING LINK (STAINLESS STEEL) (ALT)	*0.77 GR
*446	*Component	*8797558	----------LEVER ASSY	*0.00
*447	*Part	*8797559	----------LEVER (STEEL)	*0.00
*448	*Bulk item	*	----------CD CHROMATE	
*449	*Part	*8797560	----------SHAFT LEVER (STAINLESS WIRE)	*0.00
*450	*Part	*8797560	SHAFT LEVER (STAINLESS WIRE) (ALT)	*0.00
*451	*Part	*8797560	SHAFT LEVER (STAINLESS STEEL) (ALT)	*0.00
*452	*Part	*8797560	SHAFT LEVER (STAINLESS STEEL) (ALT)	*0.00
*453	*Component	*8797561	----------SEGMENT ASSY	*0.00
*454	*Part	*8797562	----------SEGMENT (BRASS)	*0.00
*455	*Part	*8797562	----------SEGMENT (BRASS) (ALT)	*0.00
*456	*Part	*8797562	----------SEGMENT (BRASS) (ALT)	*0.00
*457	*Part	*8797562	----------SEGMENT (BRASS) (ALT)	*0.00
*458	*Part	*8797563	----------SHAFT SEGMENT (STAINLESS WIRE)	*0.00
*459	*Part	*8797563	SHAFT SEGMENT (STAINLESS WIRE) (ALT)	*0.00
*460	*Part	*8797563	SHAFT SEGMENT (STAINLESS STEEL) (ALT)	*0.00
*461	*Part	*8797563	SHAFT SEGMENT (STAINLESS STEEL) (ALT)	*0.00
*462	*Component	*8797564	----------TIMING DEVICE ASSY	*0.00
*463	*Part	*8797565	----------FRAME GEAR LOWER (BRASS)	*0.00
*464	*Part	*8797565	----------FRAME GEAR LOWER (BRASS) (ALT)	*0.00
*465	*Part	*8797566	----------RIVET SECURING (BRASS)	*0.00
*466	*Part	*8797567	----------SHAFT BALANCE (STAINLESS WIRE)	*0.00
*467	*Part	*8797567	SHAFT BALANCE (STAINLESS WIRE) (ALT)	*0.00
*468	*Part	*8797567	SHAFT BALANCE (STAINLESS STEEL) (ALT)	*0.00
*469	*Part	*8797567	SHAFT BALANCE (STAINLESS STEEL) (ALT)	*0.00
*470	*Component	*8797568	----------BALANCE ASSY	*0.00

*471	*Part	*8797569	----------PALLET (SPRING STEEL)	*0.00
*472	*Part	*8797607	----------BALANCE (BRASS)	*0.00
*473	*Component	*8797570	----------SECOND WHEEL ASSY	*0.00
*474	*Part	*8797571	----------PINION SECOND WHEEL (BRASS)	*1.06 GR
*475	*Part	*8797571	PINION SECOND WHEEL (BRASS) (ALT)	*1.06 GR
*476	*Part	*8797572	----------WHEEL SECOND (BRASS)	*0.00
*477	*Part	*8797572	----------WHEEL SECOND (BRASS) (ALT)	*0.00
*478	*Part	*8797572	----------WHEEL SECOND (BRASS) (ALT)	*0.00
*479	*Component	*8797573	----------DRIVE SHAFT ASSY	*0.00
*480	*Part	*8797574	----------FRAME GEAR UPPER (BRASS)	*0.00
*481	*Part	*8797574	----------FRAME GEAR UPPER (BRASS) (ALT)	*0.00
*482	*Part	*8797575	----------RING RETAINING (STEEL)	*0.00
*483	*Bulk item	*	----------CD CHROMATE	
*484	*Part	*8797576	----------SHAFT DRIVE (STAINLESS WIRE)	*1.93 GR
*485	*Part	*8797576	SHAFT DRIVE (STAINLESS WIRE) (ALT)	*1.93 GR
*486	*Part	*8797576	SHAFT DRIVE (STAINLESS STEEL) (ALT)	*1.93 GR
*487	*Part	*8797576	SHAFT DRIVE (STAINLESS STEEL) (ALT)	*1.93 GR
*488	*Part	*8797577	----------WHEEL FIRST (BRASS)	*1.93 GR
*489	*Part	*8797577	----------WHEEL FIRST (BRASS) (ALT)	*1.93 GR
*490	*Part	*8797577	----------WHEEL FIRST (BRASS) (ALT)	*1.93 GR
*491	*Component	*8797578	----------ESCAPE WHEEL ASSY	*0.00
*492	*Part	*8797579	----------PINION ESCAPE WHEEL (BRASS)	*0.00
*493	*Part	*8797579	PINION ESCAPE WHEEL (BRASS) (ALT)	*0.00
*494	*Part	*8797580	----------WHEEL ESCAPE (BRASS)	*0.00
*495	*Component	*8798731	--------DETONATOR FLASH M80	*0.00
*496	*Part	*8798756	----------CUP DETONATOR (CU ALLOY)	*0.00
*497	*Bulk item	*	----------SHELLAC	
*498	*Part	*8798754	----------DISC DETONATOR (CU ALLOY)	*0.00
*499	*Bulk item	*	----------LACQUER CELL NITRATE	
*500	*Bulk item	*	----------SHELLAC	
*501	*Part	*8798757	----------DISC DETONATOR CLOSING (CU ALLOY)	*0.00
*502	*Part	*	----------PEP (PB AZIDE)	*3.41 GR
*503	*Compound	*	----------PB AZIDE (100.00%)	
*504	*Part	*	----------PEP (RDX)	*1.77 GR
*505	*Compound	*	----------RDX (100.00%)	
*506	*Part	*	----------PEP (RDX) (ALT)	*1.77 GR
*507	*Compound	*	----------RDX (100.00%)	
*508	*Component	*9205737	------PLUNGER ASSY	*0.00
*509	*Part	*9255370	--------PLUNGER (ZN ALLOY)	*0.00
*510	*Bulk item	*	----------CHROMATE COATING	

*511	*Part	*8797584	--------CUSHION DETONATOR PLUNGER (CORK)	*0.03 GR
*512	*Part	*9234583	--------O-RING (POLYETHYLENE PLASTIC) (ALT)	*0.00
*513	*Part	*9234583	--------O-RING (POLYETHYLENE PLASTIC) (ALT)	*0.03 GR
*514	Component	9311702(.05S)	--------DELAY ELEMENT M2 (.05 SEC)	*0.00
*515	*Part	*9282910	----------BODY DELAY (AL ALLOY)	*0.00
*516	*Bulk item	*	----------ANODIC COATING	
*517	*Bulk item	*	----------SEALING COMPOUND (9282915)	
*518	*Part	*9282910	----------BODY DELAY (AL ALLOY) (ALT)	*0.00
*519	*Bulk item	*	----------ANODIC COATING	
*520	*Bulk item	*	----------SEALING COMPOUND (9282915)	
*521	Part	9282909(.05SEC)	----------COMP DELAY (DELAY COMP MIX)	*32.00 MG
*522	*Compound	*	----------BA CHROMATE (83.00%)	
*523	*Compound	*	----------B AMORPHOUS PWDR (16.00%)	
*524	*Compound	*	----------VINYL ALCOHOL (1.00%)	
*525	*Component	*9282912	----------PRIMER STAB ASSY	*0.00
*526	*Part	*9282914	----------CUP PRIMER (AL ALLOY)	*0.00
*527	*Bulk item	*	----------SEALING COMPOUND (9282915)	
*528	*Part	*9282914	----------CUP PRIMER (AL ALLOY) (ALT)	*0.00
*529	*Bulk item	*	----------SEALING COMPOUND (9282915)	
*530	*Part	*9282913	----------DISC CLOSING (AL ALLOY)	*0.00
*531	*Bulk item	*	----------SEALING COMPOUND (9282915)	
*532	*Part	*9282915	----------DISC CLOSING (AL FOIL) (ALT)	*0.00
*533	*Bulk item	*	----------SEALING COMPOUND (9282915)	
*534	*Part	*	----------PEP (PRIMER MIX NOL #130*11)	*20.00 MG
*535	*Compound	*	----------SB SULFIDE (15.00%)	
*536	*Compound	*	----------BA NITRATE (20.00%)	
*537	*Compound	*	----------PB AZIDE (20.00%)	
*538	*Compound	*	----------TETRACENE (5.00%)	
*539	*Compound	*	----------PB STYPHNATE (40.00%)	
*540	*Part	*	----------PEP (PRIMER MIX NOL #130*12) (ALT)	*20.00 MG
*541	*Compound	*	----------BA NITRATE (20.00%)	
*542	*Compound	*	----------PB AZIDE (20.00%)	
*543	*Compound	*	----------PB STYPHNATE (40.00%)	
*544	*Compound	*	----------SB SULFIDE (15.00%)	
*545	*Compound	*	----------TETRACENE (5.00%)	
*546	*Component	*8840608	----------RELAY M7 ASSY	*0.00
*547	*Part	*8844437	----------WASHER RELAY (AL ALLOY)	*0.00
*548	Part	8840625-3	----------CUP FLAT BOTTOM RELAY (AL ALLOY)	*0.00
*549	*Part	*	----------PEP (PB AZIDE)	*1.43 GR
*550	*Compound	*	----------PB AZIDE (100.00%)	

*551	*Part	*	----------PEP (PB AZIDE) (ALT)	*1.43 GR
*552	*Compound	*	----------PB AZIDE (100.00%)	
*553	*Part	*	----------PEP (PB AZIDE) (ALT)	*1.43 GR
*554	*Compound	*	----------PB AZIDE (100.00%)	
*555	*Component	*8797586	--------PLUNGER LEAD ASSY	*0.00
*556	*Part	*9234638	----------CUP DETONATOR (CU ALLOY)	*0.00
*557	*Part	*	----------PEP (RDX)	*1.90 GR
*558	*Compound	*	----------RDX (100.00%)	
*559	*Part	*	----------PEP (COMP A5 (RDX 98.5%)) (ALT)	*1.90 GR
*560	*Compound	*	----------RDX (98.50%)	
*561	*Compound	*	----------STEARIC ACID (1.50%)	
*562	*Part	*	----------PEP (RDX PELLETS (CA RESINATE)) (ALT)	*1.90 GR
*563	*Compound	*	----------GRAPHITE (0.25%)	
*564	*Compound	*	----------CA RESINATE (1.75%)	
*565	*Compound	*	----------RDX (98.00%)	
*566	*Part	*	----------PEP (RDX PELLETS) (ALT)	*1.90 GR
*567	*Compound	*	----------RDX (98.50%)	
*568	*Compound	*	----------STEARIC ACID (1.50%)	
*569	*Part	*	----------PEP (RDX) (ALT)	*1.90 GR
*570	*Compound	*	----------RDX (100.00%)	
*571	*Part	*	----------PEP (RDX PELLETS) (ALT)	*1.90 GR
*572	*Compound	*	----------RDX (100.00%)	
*573	*Part	*8798409	----------DISC DETONATOR CLOSING (CU ALLOY)	*0.00
*574	*Component	*8798730	--------DETONATOR M63 ASSY	*0.00
*575	*Part	*9297868	----------CUP DETONATOR (CU ALLOY)	*0.00
*576	*Bulk item	*	----------LACQUER CELL NITRATE	
*577	*Bulk item	*	----------ADHESIVE PROXSEAL (9272251) (ALT)	
*578	*Part	*	----------PEP (PRIMER MIX NOL #130*14)	*0.31 GR
*579	*Compound	*	----------PB STYPHNATE (40.00%)	
*580	*Compound	*	----------SB SULFIDE (15.00%)	
*581	*Compound	*	----------BA NITRATE (20.00%)	
*582	*Compound	*	----------PB AZIDE (20.00%)	
*583	*Compound	*	----------TETRACENE (5.00%)	
*584	*Part	*	----------PEP (RDX)	*0.99 GR
*585	*Compound	*	----------RDX (100.00%)	
*586	*Part	*	----------PEP (RDX) (ALT)	*0.99 GR
*587	*Compound	*	----------RDX (100.00%)	
*588	*Part	*9297866	----------DISC DETONATOR (CU ALLOY)	*0.00
*589	*Bulk item	*	----------LACQUER CELL NITRATE	
*590	*Bulk item	*	----------ADHESIVE PROXSEAL (9272251)	

*591	*Part	*9297867	----------DISC DETONATOR CLOSING (CU ALLOY)	*0.00
*592	*Bulk item	*	----------LACQUER CELL NITRATE	
*593	*Part	*	----------PEP (PB AZIDE)	*2.00 GR
*594	*Compound	*	----------PB AZIDE (100.00%)	
*595	*Component	*8797521	----BOOSTER LEAD ASSY	*0.00
*596	*Part	*8797523	------CUP LOWER (AL ALLOY)	*3.52 GR
*597	*Part	*8797523	------CUP LOWER (AL ALLOY) (ALT)	*3.52 GR
*598	*Part	*8797524	------DISC BOOSTER LEAD CLOSING (AL ALLOY)	*0.14 GR
*599	*Bulk item	*	--------TAPE ADHESIVE	
*600	*Part	*	------PEP (RDX)	*8.30 GR
*601	*Compound	*	--------RDX (100.00%)	
*602	*Part	*	------PEP (RDX) (ALT)	*8.30 GR
*603	*Compound	*	--------RDX (100.00%)	
*604	*Part	*	------PEP (COMP A5 (RDX 98.5%)) (ALT)	*8.30 GR
*605	*Compound	*	--------RDX (98.50%)	
*606	*Compound	*	--------STEARIC ACID (1.50%)	
*607	*Component	*8797525	------UPPER CUP ASSY	*0.00
*608	*Part	*8797527	--------CUP UPPER (AL ALLOY)	*0.16 GR
*609	*Part	*	--------PEP (RDX)	*0.37 GR
*610	*Compound	*	----------RDX (100.00%)	
*611	*Part	*	--------PEP (RDX) (ALT)	*0.37 GR
*612	*Compound	*	----------RDX (100.00%)	
*613	*Part	*	--------PEP (RDX PELLETS) (ALT)	*0.37 GR
*614	*Compound	*	----------RDX (98.50%)	
*615	*Compound	*	----------STEARIC ACID (1.50%)	
*616	*Part	*	--------PEP (RDX PELLETS (CA RESINATE)) (ALT)	*0.37 GR
*617	*Compound	*	----------GRAPHITE (0.25%)	
*618	*Compound	*	----------CA RESINATE (1.75%)	
*619	*Compound	*	----------RDX (98.00%)	
*620	*Part	*	--------PEP (RDX PELLETS) (ALT)	*0.37 GR
*621	*Compound	*	----------RDX (100.00%)	
*622	*Part	*	--------PEP (COMP A5 (RDX 98.5%)) (ALT)	*0.37 GR
*623	*Compound	*	----------RDX (98.50%)	
*624	*Compound	*	----------STEARIC ACID (1.50%)	
*625	*Component	*8797517	----BOOSTER ASSY	*0.00
*626	*Part	*8797518	------PELLET BOOSTER (RDX PELLETS)	*35.93 GR
*627	*Compound	*	--------RDX (98.50%)	
*628	*Compound	*	--------STEARIC ACID (1.50%)	
*629	*Part	*8797518	------PELLET BOOSTER (TETRYL PELLETS) (ALT)	*35.93 GR
*630	*Compound	*	--------GRAPHITE (0.50%)	

*631	*Compound	*	--------TETRYL (98.00%)	
*632	*Compound	*	--------BA STEARATE (0.75%)	
*633	*Compound	*	--------CA STEARATE (0.75%)	
*634	*Part	*8797519	------LINER BOOSTER (AL ALLOY)	*93.70 GR
*635	*Part	*8797520	------DISC BOOSTER CLOSING (AL ALLOY)	*10.40 GR
*636	*Part	*8797520	------DISC BOOSTER CLOSING (AL ALLOY) (ALT)	*10.40 GR
*637	*Part	*8797520	------DISC BOOSTER CLOSING (AL ALLOY) (ALT)	*10.40 GR
*638	*Part	*8797520	------DISC BOOSTER CLOSING (AL ALLOY) (ALT)	*10.40 GR
*639	*Part	*8797520	------DISC BOOSTER CLOSING (AL ALLOY) (ALT)	*10.40 GR
*640	*Component	*9205733	----PULL WIRE ASSY	*0.00
*641	*Part	*9205734	------PIN PLUNGER SAFETY (AL ALLOY)	*0.00
*642	*Part	*9205735	------PIN SETBACK (SPRING STEEL)	*0.00
*643	*Bulk item	*	--------CD CHROMATE	
*644	*Part	*9205736	------WIRE PULL (SPRING STEEL)	*0.00
*645	*Bulk item	*	--------CD CHROMATE	

MIDAS: Detailed Structure C697

Nomenclature: CTG 4.2IN HE M329A2 W/O FUZE
NSN: 1315012118411
DODIC: C697
Drawing #: 9235654
Family: HC
Reported weight: 22.0000 LB
Specification: MIL-C-48087
Remarks: **PEP WEIGHT FOR HALF INCREMENT IS ESTIMATED

#	Type	Drawing#	Nomenclature	Weight
*1	*Munition	*9235654	CTG 4.2IN HE M329A2 W/O FUZE	*22.00 LB
*2	*Part	*9245522	--CONTAINER CTG (AL ALLOY)	*0.24 LB
*3	*Bulk item	*	----CHROMATE COATING	
*4	*Bulk item	*	----SEALING COMPOUND (10523979)	
*5	*Part	*9245522	--CONTAINER CTG (AL ALLOY) (ALT)	*0.24 LB
*6	*Bulk item	*	----CHROMATE COATING	
*7	*Bulk item	*	----SEALING COMPOUND (10523979)	
*8	*Part	*8835182	--HOLDER PROP (SPRING STEEL)	*0.01 LB
*9	*Bulk item	*	----CD COATING	
*10	*Bulk item	*	----CD CHROMATE (ALT)	
*11	*Part	*8835182	--HOLDER PROP (STAINLESS STEEL) (ALT)	*0.01 LB
*12	*Part	*7549009	--PLUG (AL ALLOY)	*0.39 LB
*13	*Bulk item	*	----SILICONE COMPOUND	
*14	*Part	*8797088	--SPACER (CNTR BOARD)	*0.01 LB
*15	*Bulk item	*	----ANIMAL GLUE	
*16	*Part	*9282892	--PLUG CLOSING (POLYETHYLENE PLASTIC) (ALT)	*0.00
*17	*Component	*9257181	--STRIKER NUT ASSY	*0.00
*18	*Part	*8835181	----POINT STRIKER (BRASS)	*0.00
*19	*Part	*9257180	----NUT STRIKER (AL ALLOY)	*51.29 GM
*20	*Bulk item	*	------CHROMATE COATING	
*21	*Bulk item	*	------LACQUER	
*22	*Bulk item	*	------PETTMAN CEMENT	
*23	*Part	*9257180	----NUT STRIKER (AL ALLOY) (ALT)	*51.29 GM
*24	*Bulk item	*	------CHROMATE COATING	
*25	*Bulk item	*	------LACQUER	
*26	*Bulk item	*	------PETTMAN CEMENT	
*27	*Part	*8835180	----PLATE STRIKER (BRASS)	*33.83 GR
*28	*Bulk item	*	------LACQUER	
*29	*Component	*9244177	--CHG PROP M36A2	*0.00

*30	*Component	*9276823	----PROP CHG SUB ASSY REAR	*0.00
*31	*Part	*9244179	------HALF INCREMENT (PROP M8)	122.90 GR
*32	*Compound	*	--------NITROGLYCERIN (43.00%)	
*33	*Compound	*	--------DIETHYLPHTHALATE (3.00%)	
*34	*Compound	*	--------K NITRATE (1.25%)	
*35	*Compound	*	--------ETHYL CENTRALITE (0.60%)	
*36	*Compound	*	--------NC (52.15%)	
*37	*Bulk item	*	--------THREAD SILK	
*38	*Bulk item	*	--------THREAD COTTON MACHINE (ALT)	
*39	*Component	*9244180	------INCREMENT	122.90 GR
*40	*Part	*9244179	--------HALF INCREMENT (PROP M8)	122.90 GR
*41	*Compound	*	----------NITROGLYCERIN (43.00%)	
*42	*Compound	*	----------DIETHYLPHTHALATE (3.00%)	
*43	*Compound	*	----------K NITRATE (1.25%)	
*44	*Compound	*	----------ETHYL CENTRALITE (0.60%)	
*45	*Compound	*	----------NC (52.15%)	
*46	*Bulk item	*	----------THREAD SILK	
*47	*Bulk item	*	----------THREAD COTTON MACHINE (ALT)	
*48	*Component	*9244178	------FIVE INCREMENT BUNDLE	614.50 GR
*49	*Part	*9244179	--------HALF INCREMENT (PROP M8)	614.50 GR
*50	*Compound	*	----------NITROGLYCERIN (43.00%)	
*51	*Compound	*	----------DIETHYLPHTHALATE (3.00%)	
*52	*Compound	*	----------K NITRATE (1.25%)	
*53	*Compound	*	----------ETHYL CENTRALITE (0.60%)	
*54	*Compound	*	----------NC (52.15%)	
*55	*Bulk item	*	----------THREAD SILK	
*56	*Bulk item	*	----------THREAD COTTON MACHINE (ALT)	
*57	*Component	*9244181	----BAG LOADING ASSY	*0.00
*58	*Part	*	------PROP M9 (PROP M9*)	340.00 GR
*59	*Compound	*	--------NC (57.52%)	
*60	*Compound	*	--------NITROGLYCERIN (39.84%)	
*61	*Compound	*	--------ETHYL CENTRALITE (0.75%)	
*62	*Compound	*	--------K NITRATE (1.49%)	
*63	*Compound	*	--------GRAPHITE (0.40%)	
*64	*Component	*9244182	------BODY ASSY	*0.00
*65	*Part	*9244183	--------BODY INCREMENT (RAYON CLOTH)	*0.00
*66	*Bulk item	*	----------THREAD SILK	
*67	*Bulk item	*	----------THREAD POLYESTER (ALT)	
*68	*Bulk item	*	----------THREAD POLYESTER (ALT)	
*69	*Bulk item	*	----------INK MARKING LNDRY BLK	

*70	*Bulk item	*	----------INK MARKING (9210876) (ALT)	
*71	*Component	*9276822	----PROP CHG SUB ASSY FRONT	*0.00
*72	*Component	*9244178	------FIVE INCREMENT BUNDLE	614.50 GR
*73	*Part	*9244179	--------HALF INCREMENT (PROP M8)	614.50 GR
*74	*Compound	*	----------NITROGLYCERIN (43.00%)	
*75	*Compound	*	----------DIETHYLPHTHALATE (3.00%)	
*76	*Compound	*	----------K NITRATE (1.25%)	
*77	*Compound	*	----------ETHYL CENTRALITE (0.60%)	
*78	*Compound	*	----------NC (52.15%)	
*79	*Bulk item	*	----------THREAD SILK	
*80	*Bulk item	*	----------THREAD COTTON MACHINE (ALT)	
*81	*Component	*9244180	------INCREMENT	122.90 GR
*82	*Part	*9244179	--------HALF INCREMENT (PROP M8)	122.90 GR
*83	*Compound	*	----------NITROGLYCERIN (43.00%)	
*84	*Compound	*	----------DIETHYLPHTHALATE (3.00%)	
*85	*Compound	*	----------K NITRATE (1.25%)	
*86	*Compound	*	----------ETHYL CENTRALITE (0.60%)	
*87	*Compound	*	----------NC (52.15%)	
*88	*Bulk item	*	----------THREAD SILK	
*89	*Bulk item	*	----------THREAD COTTON MACHINE (ALT)	
*90	*Component	*9252205	--CTG IGN M2A2	*0.00
*91	*Part	*9242579	----TUBE INSERT (PAPER SHELL)	*0.00
*92	*Bulk item	*	------ADHESIVE	
*93	*Part	*9282887	----CAP (POLYETHYLENE PLASTIC)	*0.00
*94	*Part	*9278190	----CAP CRIMP (BRASS)	*0.00
*95	*Part	*	----PEP (BLACK PWDR CL 3)	170.00 GR
*96	*Compound	*	------K NITRATE (74.00%)	
*97	*Compound	*	------S (10.40%)	
*98	*Compound	*	------CHARCOAL (15.60%)	
*99	*Component	*9252692	----PRIMER & BODY ASSY	*0.00
*100	*Part	*8835177	------PRIMER (PRIMER MIX)	*1.00 GR
*101	*Compound	*	--------BA NITRATE (42.00%)	
*102	*Compound	*	--------PB STYPHNATE (40.00%)	
*103	*Compound	*	--------SB SULFIDE (11.00%)	
*104	*Compound	*	--------NC (6.00%)	
*105	*Compound	*	--------TETRACENE (1.00%)	
*106	*Bulk item	*	--------LACQUER CELL NITRATE	
*107	*Bulk item	*	--------LOCTITE (9344972)	
*108	*Component	*9254841	------BODY ASSY	*0.00
*109	*Part	*9254841*1	--------BODY PACKING (PAPER WAD)	*0.00

*110	*Part	*9254841*2	--------BODY (POLYETHYLENE)	*0.00
*111	*Bulk item	*	----------STENCIL INK BLK (ALT)	
*112	*Bulk item	*	----------INK MARKING BLK (ALT)	
*113	*Part	*9254841*3	--------HEAD (STEEL)	368.00 GR
*114	*Bulk item	*	----------CD COATING	
*115	*Bulk item	*	----------LACQUER CELL NITRATE	
*116	*Bulk item	*	----------LOCTITE (9344972)	
*117	*Bulk item	*	----------STENCIL INK BLK	
*118	*Bulk item	*	----------INK MARKING BLK (ALT)	
*119	*Part	*9254841*3	--------HEAD (BRASS) (ALT)	340.00 GR
*120	*Bulk item	*	----------LACQUER CELL NITRATE	
*121	*Bulk item	*	----------LOCTITE (9344972)	
*122	*Bulk item	*	----------STENCIL INK BLK	
*123	*Bulk item	*	----------INK MARKING BLK (ALT)	
*124	*Component	*9254841	------BODY ASSY FEDERAL CTG (ALT)	*0.00
*125	*Component	*9391030	--OBTURATOR ASSY	*0.00
*126	*Part	*9391031	----BRISTLE STRIP (SN PLATED WIRE)	*0.00
*127	*Bulk item	*	------STEEL STAPLE	
*128	*Part	*9391032	----OBTURATOR (POLYBUTADIENE NEOPRENE)	*0.00
*129	*Bulk item	*	------PAINT PENTAL MARKER	
*130	*Component	*9241269	--PROJ 4.2IN M329A2 LD ASSY	*19.25 LB
*131	*Part	*	----PEP (COMP B (RDX CL A))	*5.75 LB
*132	*Compound	*	------RDX (60.00%)	
*133	*Compound	*	------TNT (39.00%)	
*134	*Compound	*	------WAX (1.00%)	
*135	*Part	*8797092	----LINER (AL ALLOY)	*0.04 LB
*136	*Bulk item	*	------SILICONE COMPOUND	
*137	*Bulk item	*	------LOCTITE	
*138	*Component	*11738359	----PROJ METAL PARTS ASSY	*0.00
*139	*Component	*11738360	------BODY ASSY	*0.00
*140	*Part	11738360-1	--------BODY (STEEL)	*13.49 LB
*141	*Bulk item	*	----------ZN PHOSPHATE	
*142	*Bulk item	*	----------ENAMEL	
*143	*Bulk item	*	----------LACQUER (ALT)	
*144	*Bulk item	*	----------BRAZING AG	
*145	*Bulk item	*	----------STENCIL INK YLW	
*146	*Bulk item	*	----------INK MARKING YLW	
*147	*Bulk item	*	----------CORROSION PREVENTIVE CMPD	
*148	*Part	11738360-1	--------BODY (STEEL) (ALT)	*13.49 LB
*149	*Bulk item	*	----------ZN PHOSPHATE	

*150	*Bulk item	*	----------ENAMEL	
*151	*Bulk item	*	----------LACQUER (ALT)	
*152	*Bulk item	*	----------BRAZING AG	
*153	*Bulk item	*	----------STENCIL INK YLW	
*154	*Bulk item	*	----------INK MARKING YLW (ALT)	
*155	*Bulk item	*	----------CORROSION PREVENTIVE CMPD	
*156	*Part	*11738361	--------COVER BASE (STEEL)	*0.00 LB
*157	*Bulk item	*	----------BRAZING AG	
*158	*Part	11738360*2	--------ROTATING BAND (CU ELECTRODE)	*0.00
*159	*Component	*8797090	--SUPPL CHG ASSY	*0.00
*160	*Part	*	----PEP (SUPP CHARGE COMP)	*0.30 LB
*161	*Compound	*	------TNT (98.50%)	
*162	*Compound	*	------BA STEARATE (1.50%)	
*163	*Part	*8838201	----BODY (AL ALLOY)	*0.03 LB
*164	*Bulk item	*	------STENCIL INK	
*165	*Part	*8838201	----BODY (AL ALLOY) (ALT)	*0.03 LB
*166	*Bulk item	*	------STENCIL INK	
*167	*Part	*8838203	----PAD (WOOL FELT)	*0.00
*168	*Bulk item	*	------ADHESIVE SYNTHETIC RUBBER	
*169	*Part	*8858820	----DISC (WOOL FELT)	*0.00
*170	*Bulk item	*	------ADHESIVE CELL NITRATE	
*171	*Part	*9226343	----DISC (WOOL FELT) (ALT)	*0.00
*172	*Bulk item	*	------ADHESIVE CELL NITRATE	
*173	*Part	*8838202	----DISC CLOSING (AL ALLOY)	*0.00
*174	*Part	*8848866*1	----TAB TYPE 1 (GLASS FILAMENT TAPE)	*0.00
*175	*Part	*8848866*1	----TAB TYPE 1 (PAPER) (ALT)	*0.00
*176	*Part	*8848866*2	----TAB TYPE 2 (GLASS FILAMENT TAPE) (ALT)	*0.00

MIDAS: Detailed Structure D445

Nomenclature: CANISTER 155MM SMK HC M1
NSN: 1320003833890
DODIC: D445
Drawing #: 15-11-33
Family: CS
Reported weight: 7.3500 LB
Specification: MIL-C-3120
Remarks:

#	Type	Drawing#	Nomenclature	Weight
1	Munition	15-11-33	CANISTER 155MM SMK HC M1	7.35 LB
2	Component	15-11-33	--CANISTER 155MM SMK HC M1	7.35 LB
3	Part	15-11-37	----DISC CLOSING (STEEL)	0.05 LB
4	Bulk item		------VARNISH PHENOLIC	
5	Part	15-11-35	----SLEEVE ZINC (ZN)	0.03 LB
6	Part	15-11-124	----DISC PACKING (AL ALLOY)	0.05 LB
7	Part	15-11-124	DISC PACKING (BOOK COVER BOARD) (ALT)	0.00
8	Part	15-11-126	----STARTER SLUG (STARTER MIX)	0.50 LB
9	Compound		------SI (26.00%)	
10	Compound		------K NITRATE (35.00%)	
11	Compound		------CHARCOAL (4.00%)	
12	Compound		------FE OXIDE BLK (22.00%)	
13	Compound		------AL PWDR (13.00%)	
14	Part		----WHT SMK MIX 1 (WHT SMK (HC) MIX 1)	3.00 LB
15	Compound		------HEXACHLOROETHANE (44.53%)	
16	Compound		------ZN OXIDE (46.47%)	
17	Compound		------AL PWDR (9.00%)	
18	Component	15-11-38	----BODY ASSY	1.75 LB
19	Part	15-11-39	------BODY (STEEL)	1.30 LB
20	Bulk item		--------ENAMEL	
21	Bulk item		--------VARNISH PHENOLIC	
22	Bulk item		--------STENCIL INK	
23	Part	15-11-40	------TUBE (STEEL)	0.10 LB
24	Bulk item		--------VARNISH PHENOLIC	
25	Component	15-11-125	----IMPREGNATED SLEAVE ASSY	0.00
26	Part	15-11-125*1	SLEEVE IMPREGNATED (COTTON CLOTH)	0.00
27	Part		IMPREGNATING MIX 1 (IMPREGNATING MIX 1)	0.00 LB
28	Compound		--------K NITRATE (70.50%)	
29	Compound		--------CHARCOAL (29.50%)	

MIDAS: Detailed Structure D449

Nomenclature: CANISTER 155MM SMK YLW M3
NSN: 1320002896878
DODIC: D449
Drawing #: 15-11-67
Family: CS
Reported weight: 4.8066 LB
Specification: MIL-C-003297
Remarks:

#	Type	Drawing#	Nomenclature	Weight
1	Munition	15-11-67	CANISTER 155MM SMK YLW M3	4.81 LB
2	Component	15-11-67 YLW	--CANISTER 155MM SMK M3	4.81 LB
3	Part		----STARTER MIX 3 (STARTER MIX 3)	30.00 GM
4	Compound		------K NITRATE (70.50%)	
5	Compound		------CHARCOAL (29.50%)	
6	Part		----STARTER MIX 2 (STARTER MIX 2)	30.00 GM
7	Compound		------SI (26.00%)	
8	Compound		------K NITRATE (35.00%)	
9	Compound		------CHARCOAL (4.00%)	
10	Compound		------FE OXIDE BLK (22.00%)	
11	Compound		------AL PWDR (13.00%)	
12	Part		----YLW SMK MIX (YLW SMK MIX)	1430.46 GM
13	Compound		------K CHLORATE (26.50%)	
14	Compound		------LACTOSE TECHNICAL (16.00%)	
15	Compound		------MG CARBONATE (8.00%)	
16	Compound		------DYE YLW (17.50%)	
17	Compound		------DYE BENZANTHRONE (32.00%)	
18	Part	15-11-37	----DISC CLOSING (STEEL)	0.10 LB
19	Bulk item		------VARNISH PHENOLIC	
20	Bulk item		------PRIMER	
21	Bulk item		------PETTMAN CEMENT	
22	Bulk item		------ZN PHOSPHATE	
23	Part	15-11-37	----DISC CLOSING (STEEL) (ALT)	0.10 LB
24	Bulk item		------VARNISH PHENOLIC	
25	Bulk item		------PRIMER	
26	Bulk item		------PETTMAN CEMENT	
27	Bulk item		------ZN PHOSPHATE	
28	Component	15-11-38	----BODY ASSY	0.00
29	Part	15-11-39	------BODY (STEEL)	1.32 LB
30	Bulk item		--------VARNISH PHENOLIC	
31	Bulk item		--------ENAMEL	
32	Bulk item		--------TAPE PRESSURE SENSITIVE	
33	Bulk item		--------STENCIL INK	

34	Bulk item		--------PETTMAN CEMENT	
35	Bulk item		--------ZN PHOSPHATE	
36	Part	15-11-39	------BODY (STEEL) (ALT)	1.32 LB
37	Bulk item		--------VARNISH PHENOLIC	
38	Bulk item		--------ENAMEL	
39	Bulk item		--------ENAMEL (ALT)	
40	Bulk item		--------TAPE PRESSURE SENSITIVE	
41	Bulk item		--------STENCIL INK	
42	Bulk item		--------PETTMAN CEMENT	
43	Bulk item		--------ZN PHOSPHATE	
44	Part	15-11-40	------TUBE (STEEL)	0.10 LB
45	Bulk item		--------VARNISH PHENOLIC	
46	Part	15-11-40	------TUBE (STEEL) (ALT)	0.10 LB
47	Bulk item		--------VARNISH PHENOLIC	
48	Component	15-11-34	----IMPREGNATED SLEEVE ASSY	0.00
49	Part	15-11-34*1	SLEEVE IMPREGNATED (WOOL BUNTING)	0.00
50	Part	15-11-34*1	SLEEVE IMPREGNATED (COTTON CLOTH) (ALT)	0.00
51	Part		IMPREGNATING MIX 1 (IMPREGNATING MIX 1)	0.00 LB
52	Compound		--------K NITRATE (70.50%)	
53	Compound		--------CHARCOAL (29.50%)	

MIDAS: Detailed Structure D451

Nomenclature: CANISTER 155MM SMK GRN M4
NSN: 1320002896882
DODIC: D451
Drawing #: 15-11-70
Family: CS
Reported weight: 2.7700 LB
Specification: MIL-C-003297C
Remarks:

#	Type	Drawing#	Nomenclature	Weight
*1	*Munition	*15-11-70	CANISTER 155MM SMK GRN M4	*2.77 LB
*2	*Component	*15-11-70 YLW	--CANISTER 155MM SMK M4	*2.77 LB
*3	*Part	*	----STARTER MIX 3 (STARTER MIX 3)	*30.00 GM
*4	*Compound	*	------K NITRATE (70.50%)	
*5	*Compound	*	------CHARCOAL (29.50%)	
*6	*Part	*	----STARTER MIX 2 (STARTER MIX 2)	*30.00 GM
*7	*Compound	*	------SI (26.00%)	
*8	*Compound	*	------K NITRATE (35.00%)	
*9	*Compound	*	------CHARCOAL (4.00%)	
*10	*Compound	*	------FE OXIDE BLK (22.00%)	
*11	*Compound	*	------AL PWDR (13.00%)	
*12	*Part	*	----YLW SMK MIX (YLW SMK MIX)	728.65 GM
*13	*Compound	*	------K CHLORATE (26.50%)	
*14	*Compound	*	------LACTOSE TECHNICAL (16.00%)	
*15	*Compound	*	------MG CARBONATE (8.00%)	
*16	*Compound	*	------DYE YLW (17.50%)	
*17	*Compound	*	------DYE BENZANTHRONE (32.00%)	
*18	*Part	*15-11-45	----DISC CLOSING (STEEL)	*0.10 LB
*19	*Bulk item	*	------VARNISH PHENOLIC	
*20	*Bulk item	*	------PRIMER	
*21	*Bulk item	*	------PETTMAN CEMENT	
*22	*Bulk item	*	------ZN PHOSPHATE	
*23	*Component	*15-11-46	----BODY ASSY	*0.00
*24	*Part	*15-11-47	------BODY (STEEL)	*0.96 LB
*25	*Bulk item	*	--------VARNISH PHENOLIC	
*26	*Bulk item	*	--------ENAMEL	
*27	*Bulk item	*	--------ENAMEL (ALT)	
*28	*Bulk item	*	--------TAPE PRESSURE SENSITIVE	
*29	*Bulk item	*	--------STENCIL INK	
*30	*Bulk item	*	--------PETTMAN CEMENT	

*31	*Bulk item	*	--------ZN PHOSPHATE	
*32	*Part	*15-11-47	------BODY (STEEL) (ALT)	*0.96 LB
*33	*Bulk item	*	--------VARNISH PHENOLIC	
*34	*Bulk item	*	--------ENAMEL	
*35	*Bulk item	*	--------ENAMEL (ALT)	
*36	*Bulk item	*	--------TAPE PRESSURE SENSITIVE	
*37	*Bulk item	*	--------STENCIL INK	
*38	*Bulk item	*	--------PETTMAN CEMENT	
*39	*Bulk item	*	--------ZN PHOSPHATE	
*40	*Part	*15-11-48	------TUBE (STEEL)	*0.10 LB
*41	*Bulk item	*	--------VARNISH PHENOLIC	
*42	*Part	*15-11-48	------TUBE (STEEL) (ALT)	*0.10 LB
*43	*Bulk item	*	--------VARNISH PHENOLIC	
*44	*Component	*15-11-42	----IMPREGNATED SLEEVE ASSY	*0.00
*45	*Part	*15-11-42*1	SLEEVE IMPREGNATED (WOOL BUNTING)	*0.00
*46	*Part	*15-11-42*1	SLEEVE IMPREGNATED (COTTON CLOTH) (ALT)	*0.00
*47	*Part	*	IMPREGNATING MIX 1 (IMPREGNATING MIX 1)	*0.00 LB
*48	*Compound	*	--------K NITRATE (70.50%)	
*49	*Compound	*	--------CHARCOAL (29.50%)	

MIDAS: Detailed Structure D513

Nomenclature: PROJ 155MM PRAC M804
NSN: 1320010974872
DODIC: D513
Drawing #: 9331794
Family: CS
Reported weight: 94.6000 LB
Specification: MIL-P-70447
Remarks:

#	Type	Drawing#	Nomenclature	Weight
1	Munition	9331794	PROJ 155MM PRAC M804	94.60 LB
2	Part	9340773	--LINER SUPPL CHG SMK (AL ALLOY)	2.20 OZ
3	Part	8860552	--GASKET (RUBBER)	0.00
4	Bulk item		----SILICONE COMPOUND	
5	Part	8797088	--SPACER (CNTR BOARD)	0.01 LB
6	Bulk item		----ANIMAL GLUE	
7	Component	9333792	--CANISTER SMK ASSY	0.00
8	Part		----SMK MIX (SMK MIX SW-522)	195.00 GM
9	Compound		------ZN DUST (40.00%)	
10	Compound		------K PERCHLORATE (20.00%)	
11	Compound		------K NITRATE (20.00%)	
12	Compound		------AL PWDR (20.00%)	
13	Part	8838201	----BODY (AL ALLOY)	0.69 OZ
14	Bulk item		------STENCIL INK BLK	
15	Bulk item		------TAPE PRESSURE SENSITIVE	
16	Part	8838202	----DISC CLOSING (AL ALLOY)	2.30 GM
17	Bulk item		------ADHESIVE (9342912)	
18	Part	9341640	----CUP CLOSING (PLASTIC)	3.23 GM
19	Bulk item		------TAPE PRESSURE SENSITIVE	
20	Bulk item		------STENCIL INK BLK	
21	Part	9342877	----PAD (WOOL FELT)	0.00
22	Component	12934724	--CANISTER SMK ASSY (ALT)	0.00
23	Part		----SMK MIX (SMK MIX SW-522)	195.00 GM
24	Compound		------ZN DUST (40.00%)	
25	Compound		------K PERCHLORATE (20.00%)	
26	Compound		------K NITRATE (20.00%)	
27	Compound		------AL PWDR (20.00%)	
28	Part	12934726	----BODY (AL ALLOY)	0.69 OZ
29	Bulk item		------STENCIL INK BLK	
30	Bulk item		------TAPE PRESSURE SENSITIVE	
31	Part	12934725	----LID (AL ALLOY)	34.80 GR
32	Bulk item		------SEALING COMPOUND	
33	Part	12934727	----PAD (WOOL FELT)	0.00

34	Component	9331795	--PROJ 155MM M804 MPTS ASSY	0.00
35	Part	10520074	----PLUG LIFTING TYPE G (STEEL)	1.90 LB
36	Bulk item		------ZN PHOSPHATE	
37	Bulk item		------PRIMER	
38	Bulk item		------ENAMEL	
39	Bulk item		------ENAMEL (ALT)	
40	Bulk item		------LACQUER (ALT)	
41	Bulk item		------SILICONE COMPOUND	
42	Bulk item		------ANTI-SEIZE COMPOUND (9340744)	
43	Part	10520074	----PLUG LIFTING TYPE G (FE) (ALT)	1.90 LB
44	Bulk item		------ZN PHOSPHATE	
45	Bulk item		------PRIMER	
46	Bulk item		------ENAMEL	
47	Bulk item		------ENAMEL (ALT)	
48	Bulk item		------LACQUER (ALT)	
49	Bulk item		------SILICONE COMPOUND	
50	Bulk item		------ANTI-SEIZE COMPOUND (9340744)	
51	Component	9331229	----BODY ASSY	90.40 LB
52	Part	9331797	------BODY (STEEL)	88.70 LB
53	Bulk item		--------ZN PHOSPHATE	
54	Bulk item		--------PRIMER	
55	Bulk item		--------ENAMEL BLUE	
56	Bulk item		--------ENAMEL BRN	
57	Bulk item		--------ENAMEL BRN (ALT)	
58	Bulk item		--------LACQUER BRN (ALT)	
59	Bulk item		--------STENCIL INK BRN (ALT)	
60	Bulk item		--------STENCIL INK WHT	
61	Bulk item		--------ANTI-SEIZE COMPOUND (9340744)	
62	Part	7548993	------BLANK,ROTATING BAND (BRASS)	1.70 LB
63	Component	9251987	----GROMMET ASSY	0.00
64	Part	9251987*1	------GROMMET (PLASTIC)	0.00
65	Part	9255510-1	FASTENER GROMMET (STAINLESS STEEL)	0.00

USADACS - MIDAS DETAILED STRUCTURE FOR A MUNITION (LESS BULK ITEMS)

06/02/97

Nomenclature: CHG PROP 155MM GB M3A1

NSN: 1320009351922 DODIC: D540 Reported Weight: 5.8170 LB

DRAWING #	NOMENCLATURE	TYPE	SPECIFICATION	TGCS	-- REPORTED --- WEIGHT	UNIT	FACTOR	FACTORED WEIGHT(LB)
8887277	CHG PROP 155MM GB M3A1	Munition	MIL-C-60418		5.8170	LB	1.0000	
8887278	BASE CHG #1 LOADING ASSY	Component					1.0000	
	PROP M1 (PROP M1*)	Part	MIL-P-60416	/2////	2.0000	LB	1.0000	2.00000000
	NC (83.34%)	Compound	MIL-N-244	/1/C///				
	K SULFATE* (0.98%)	Compound	MIL-P-193	/1////				
	DIPHENYLAMINE (0.98%)	Compound	MIL-D-98					
	DINITROTOLUENE (9.80%)	Compound	MIL-D-204					
	DIBUTYLPHTHALATE (4.90%)	Compound	MIL-D-218					
9204943	BASE CHG #1 BODY & IGN INCREM ASSY	Component					1.0000	
8887281	IGN INCREN #1 ASSY	Component					1.0000	
	PEP (CBI IGN PWDR)	Part	MIL-P-60356	/1////	3.5000	OZ	1.0000	0.21875000
	NC (98.20%)	Compound	MIL-N-244	/1/C///				
	DIPHENYLAMINE (1.50%)	Compound	MIL-D-98					
	K NITRATE (0.10%)	Compound	MIL-P-156	///2//				
	GRAPHITE (0.20%)	Compound	MIL-G-155	//3 OR 4///				
	PEP (CBI IGN PWDR) (ALT)	Part	MIL-P-60356	/2////	3.5000	OZ	1.0000	
	NC (98.20%)	Compound	MIL-N-244	/1/C///				
	DIPHENYLAMINE (1.50%)	Compound	MIL-D-98					
	GRAPHITE (0.30%)	Compound	MIL-G-155	//3 OR 4///				
8887282	IGN ASSY	Component					1.0000	
8887283-1	IGN END (CLOTH IGN)	Part	MIL-C-13814	/2//A//			1.0000	
8887283-2	IGN END (CLOTH IGN)	Part	MIL-C-13814	/2//A//			1.0000	
8887286	REDUCER FLASH INCREM #1 ASSY	Component					1.0000	
8887287	REDUCER FLASH ASSY	Component					1.0000	
8887288-1	REDUCER FLASH (COTTON CLOTH)	Part	MIL-C-43033	///2//			1.0000	
8887288-2	REDUCER FLASH (COTTON CLOTH)	Part	MIL-C-43033	///2//			1.0000	
	PEP (K NITRATE)	Part	MIL-P-156	///2//	2.0000	OZ	1.0000	0.12500000
	K NITRATE (100.00%)	Compound	MIL-P-156	///2//				
	PEP (K SULFATE) (ALT)	Part	MIL-P-193	///2//	2.0000	OZ	1.0000	
	K SULFATE (100.00%)	Compound	MIL-P-193	///2//				
8887864	BASE CHG #1 BODY ASSY	Component					1.0000	
9204942	BODY BASE CHG #1 ASSY	Component					1.0000	
9204942*1	BODY (ACRYLIC RAYON CLOTH)	Part	MIL-C-40070	///1//			1.0000	
8887285	STRAP TYING (ACRYLIC RAYON CLOTH)	Part	MIL-C-40070	///1//			4.0000	
9295111	BASE CHG #1 LOADING ASSY (ALT)	Component					1.0000	
9295112	BASE CHG #1 BODY & IGN INCREM ASSY	Component					1.0000	
9295113	IGN INCREM #1 ASSY	Component					1.0000	
	PEP (SPI IGN PWDR)	Part	MIL-B-48387		3.0000	OZ	1.0000	
	NC (N 13.00%) (94.95%)	Compound	MIL-N-244					
	DINITROTOLUENE (2.00%)	Compound	MIL-D-204					
	GRAPHITE (0.40%)	Compound	MIL-G-155	//3,4///				
	CA CARBONATE (1.00%)	Compound	MIL-C-293					
	NA SULFATE (0.50%)	Compound	MIL-S-50004					
	DIPHENYLAMINE (1.15%)	Compound	MIL-D-98					
9295115	IGN ASSY	Component					1.0000	
9295115-1	IGN END (CLOTH IGN)	Part	MIL-C-13814	/2//A//			1.0000	
9295115-2	IGN END (CLOTH IGN)	Part	MIL-C-13814	/2//A//			1.0000	
8887286	REDUCER FLASH INCREM #1 ASSY	Component					1.0000	
8887287	REDUCER FLASH ASSY	Component					1.0000	
8887288-1	REDUCER FLASH (COTTON CLOTH)	Part	MIL-C-43033	///2//			1.0000	
8887288-2	REDUCER FLASH (COTTON CLOTH)	Part	MIL-C-43033	///2//			1.0000	
	PEP (K NITRATE)	Part	MIL-P-156	///2//	2.0000	OZ	1.0000	

USADACS - MIDAS DETAILED STRUCTURE FOR A MUNITION (LESS BULK ITEMS)

Nomenclature: CHG PROP 155MM GB M3A1
NSN: 1320009351922 DODIC: D540 Reported Weight: 5.8170 LB

DRAWING #	NOMENCLATURE	TYPE	SPECIFICATION	TGCS	-- REPORTED --- WEIGHT	UNIT	FACTOR	FACTORED WEIGHT(LB)
	K NITRATE (100.00%)	Compound	MIL-P-156	///2//				
	PEP (K SULFATE) (ALT)	Part	MIL-P-193	///2//	2.0000	OZ	1.0000	
	K SULFATE (100.00%)	Compound	MIL-P-193	///2//				
8887864	BASE CHG #1 BODY ASSY	Component					1.0000	
9204942	BODY BASE CHG #1 ASSY	Component					1.0000	
9204942*1	BODY (ACRYLIC RAYON CLOTH)	Part	MIL-C-40070	///1//			1.0000	
8887285	STRAP TYING (ACRYLIC RAYON CLOTH)	Part	MIL-C-40070	///1//			4.0000	
9221257-1	INCREM #2 LOADING ASSY	Component					1.0000	
9221256-1	BODY INCREMENT (RAYON CLOTH)	Part	MIL-C-43157	///2//			1.0000	
9221255	END (RAYON CLOTH)	Part	MIL-C-43157	///2//			2.0000	
	PROP M1 (PROP M1*)	Part	MIL-P-60416	/2////	8.0000	OZ	1.0000	0.50000000
	NC (83.34%)	Compound	MIL-N-244	/1/C///				
	K SULFATE* (0.98%)	Compound	MIL-P-193	/1////				
	DIPHENYLAMINE (0.98%)	Compound	MIL-D-98					
	DINITROTOLUENE (9.80%)	Compound	MIL-D-204					
	DIBUTYLPHTHALATE (4.90%)	Compound	MIL-D-218					
9221257-2	INCREM #3 LOADING ASSY	Component					1.0000	
9221256-2	BODY INCREMENT (RAYON CLOTH)	Part	MIL-C-43157	///2//			1.0000	
9221255	END (RAYON CLOTH)	Part	MIL-C-43157	///2//			2.0000	
	PROP M1 (PROP M1*)	Part	MIL-P-60416	/2////	10.5000	OZ	1.0000	0.65625000
	NC (83.34%)	Compound	MIL-N-244	/1/C///				
	K SULFATE* (0.98%)	Compound	MIL-P-193	/1////				
	DIPHENYLAMINE (0.98%)	Compound	MIL-D-98					
	DINITROTOLUENE (9.80%)	Compound	MIL-D-204					
	DIBUTYLPHTHALATE (4.90%)	Compound	MIL-D-218					
8887279	INCREM #4 MOD LOADING ASSY	Component					1.0000	
9221257-3	INCREM #4 LOADING ASSY	Component					1.0000	
9221256-3	BODY INCREMENT (RAYON CLOTH)	Part	MIL-C-43157	///2//			1.0000	
9221255	END (RAYON CLOTH)	Part	MIL-C-43157	///2//			2.0000	
	PROP M1 (PROP M1*)	Part	MIL-P-60416	/2////	14.5000	OZ	1.0000	0.90625000
	NC (83.34%)	Compound	MIL-N-244	/1/C///				
	K SULFATE* (0.98%)	Compound	MIL-P-193	/1////				
	DIPHENYLAMINE (0.98%)	Compound	MIL-D-98					
	DINITROTOLUENE (9.80%)	Compound	MIL-D-204					
	DIBUTYLPHTHALATE (4.90%)	Compound	MIL-D-218					
8887290	REDUCER FLASH	Component					1.0000	
	PEP (K NITRATE)	Part	MIL-P-156	///2//	1.0000	OZ	1.0000	0.06250000
	K NITRATE (100.00%)	Compound	MIL-P-156	///2//				
	PEP (K SULFATE) (ALT)	Part	MIL-P-193	///2//	1.0000	OZ	1.0000	
	K SULFATE (100.00%)	Compound	MIL-P-193	///2//				
8887291	REDUCER FLASH ASSY	Component					1.0000	
8887292-1	REDUCER FLASH (COTTON CLOTH)	Part	MIL-C-43033	///2//			1.0000	
8887292-2	REDUCER FLASH (COTTON CLOTH)	Part	MIL-C-43033	///2//			1.0000	
8887280	INCREM #5 MOD LOADING ASSY	Component					1.0000	
9221257-4	INCREM #5 LOADING ASSY	Component					1.0000	
9221256-4	BODY INCREMENT (RAYON CLOTH)	Part	MIL-C-43157	///2//			1.0000	
9221255	END (RAYON CLOTH)	Part	MIL-C-43157	///2//			2.0000	
	PROP M1 (PROP M1*)	Part	MIL-P-60416	/2////	25.0000	OZ	1.0000	1.56250000
	NC (83.34%)	Compound	MIL-N-244	/1/C///				
	K SULFATE* (0.98%)	Compound	MIL-P-193	/1////				
	DIPHENYLAMINE (0.98%)	Compound	MIL-D-98					
	DINITROTOLUENE (9.80%)	Compound	MIL-D-204					
	DIBUTYLPHTHALATE (4.90%)	Compound	MIL-D-218					

USADACS - MIDAS DETAILED STRUCTURE FOR A MUNITION (LESS BULK ITEMS)

06/02/97

Nomenclature: CHG PROP 155MM GB M3A1

NSN: 1320009351922 DODIC: D540 Reported Weight: 5.8170 LB

DRAWING #	NOMENCLATURE	TYPE	SPECIFICATION	TGCS	-- REPORTED --- WEIGHT	UNIT	FACTOR	FACTORED WEIGHT(LB)
8887290	REDUCER FLASH	Component					1.0000	
	PEP (K NITRATE)	Part	MIL-P-156	///2//	1.0000	OZ	1.0000	0.06250000
	K NITRATE (100.00%)	Compound	MIL-P-156	///2//				
	PEP (K SULFATE) (ALT)	Part	MIL-P-193	///2//	1.0000	OZ	1.0000	
	K SULFATE (100.00%)	Compound	MIL-P-193	///2//				
8887291	REDUCER FLASH ASSY	Component					1.0000	
8887292-1	REDUCER FLASH (COTTON CLOTH)	Part	MIL-C-43033	///2//			1.0000	
8887292-2	REDUCER FLASH (COTTON CLOTH)	Part	MIL-C-43033	///2//			1.0000	
4042A-3	PKG FOR NSN 1320009351922	Component					1.0000	
4042A/3	PALLET 40" X 48" (WOOD)	Part	MIL-P-15011	/I//1/I/	80.0000	LB	0.0119	0.95200000
8794342	SEAL METALLIC (PB ALLOY)	Part	QQ-L-201		0.0039	LB	0.5000	0.00195000
8880528	METAL CNTR M14A2	Component	MIL-C-2440		18.0000	LB	0.5000	
8880537-2	BODY WELDMENT (STEEL)	Part	ASTM-A366				1.0000	
8880537-2	BODY WELDMENT (STEEL) (ALT)	Part	ASTM-A569				1.0000	
8880537-2	BODY WELDMENT (STEEL) (ALT)	Part	ASTM-A512				1.0000	
8880537-2	BODY WELDMENT (STEEL) (ALT)	Part	ASTM-A513				1.0000	
8880537-2	BODY WELDMENT (STEEL) (ALT)	Part	ASTM-A519				1.0000	
8880543-2	COVER ASSY	Component	MIL-C-2440				1.0000	
8880558-2	GASKET (RUBBER)	Part	MIL-R-3065	//RS510A1///			1.0000	
8880558-2	GASKET (RUBBER) (ALT)	Part	MIL-R-3065	//RS510B///			1.0000	
8880558-2	GASKET (RUBBER) (ALT)	Part	MIL-R-3065	//RS510C1///			1.0000	
8880558-2	GASKET (RUBBER) (ALT)	Part	MIL-R-3065	//RS510F1///			1.0000	
8880549	STUD (STEEL)	Part	ASTM-A108	//1112///			1.0000	
8880549	STUD (STEEL) (ALT)	Part	ASTM-A108	//1212///			1.0000	
8880549	STUD (STEEL) (ALT)	Part	ASTM-A108	//1117///			1.0000	
9331690	WASHER (PLASTIC)	Part	L-P-512	/1/1/L//			1.0000	
9331690	WASHER (PLASTIC) (ALT)	Part	L-P-512	/1/2/M//			1.0000	
9331690	WASHER (POLYETHYLENE PLASTIC) (ALT)	Part	L-P-390	/1/1/L//			1.0000	
9331690	WASHER (POLYETHYLENE PLASTIC) (ALT)	Part	L-P-390	/1/2/M//			1.0000	
8880552	PLUG (STEEL)	Part	ASTM-A108				1.0000	
8881028-2	COVER & BASE ASSY	Component					1.0000	
8880550-2	COVER (STEEL)	Part	ASTM-A109				1.0000	
8880550-2	COVER (STEEL) (ALT)	Part	ASTM-A569				1.0000	
8880550-2	COVER (STEEL) (ALT)	Part	ASTM-A366				1.0000	
8880550-2	COVER (STEEL) (ALT)	Part	QQ-S-698				1.0000	
8880556-2	BASE (STEEL)	Part	ASTM-A109				1.0000	
8880556-2	BASE (STEEL) (ALT)	Part	ASTM-A569				1.0000	
8880554-2	SPIDER & NUT ASSY	Component					1.0000	
8880555-2	SPIDER (STEEL)	Part	ASTM-A109				1.0000	
8880555-2	SPIDER (STEEL) (ALT)	Part	ASTM-A569				1.0000	
8880553	NUT (FE MALLEABLE)	Part	ASTM-A47	//32510///			1.0000	
9232378	NUT (FE) (ALT)	Part	ASTM-A47	//32510///			1.0000	
9321553	NUT (STEEL) (ALT)	Part	ASTM-A109				1.0000	
8880545	SCREW ASSY	Component					1.0000	
8880548	SLEEVE (BRS) (ALT)	Part	ASTM-B121				1.0000	
8880546	HANDLE (STEEL)	Part	ASTM-A109				1.0000	
8880546	HANDLE (STEEL) (ALT)	Part	ASTM-A569				1.0000	
8880547	SCREW (ZN ALLOY) (ALT)	Part	QQ-Z-363				1.0000	
8880554	SCREW (BRONZE ALLOY) (ALT)	Part	QQ-C-390				1.0000	
8880548	SLEEVE (BRONZE ALLOY)	Part	QQ-C-390	/B6////			1.0000	
8880548	SLEEVE (BRS) (ALT)	Part	ASTM-B36				1.0000	
7548187	PKG MATERIAL FOR CNTR	Component					1.0000	
7548187-1	PAD (FIBERBOARD)	Part	PPP-F-320	/SF/125///			1.0000	

USADACS - MIDAS DETAILED STRUCTURE FOR A MUNITION (LESS BULK ITEMS)

06/02/97

Nomenclature: CHG PROP 155MM GB M3A1

NSN: 1320009351922 DODIC: D540 Reported Weight: 5.8170 LB

DRAWING #	NOMENCLATURE	TYPE	SPECIFICATION	TGCS	-- REPORTED --- WEIGHT	UNIT	FACTOR	FACTORED WEIGHT(LB)
7548187-2	FILLER (WOOD)	Part	COMMERCIAL				1.0000	
7548187-2	FILLER (FIBERBOARD SOLID) (ALT)	Part	MIL-F-26862				1.0000	
7548187-2	FILLER (PAPER BOARD) (ALT)	Part	PPP-P-291				1.0000	
7548187-3	SPACER (WOOD)	Part	COMMERCIAL				1.0000	
7548187-3	SPACER (FIBERBOARD SOLID) (ALT)	Part	MIL-F-26862				1.0000	
7548187-3	SPACER (PAPER BOARD) (ALT)	Part	PPP-P-291				1.0000	
8849912	CAP IGN PROTECTOR ASSY	Component					1.0000	
9256509	PAD OUTER (PAPER BOARD)	Part	PPP-P-291	/3//1//			1.0000	
8849909	BODY (BARRIER MATERIAL)	Part	PPP-B-1055	///B2//			1.0000	
8849913	PAD (PAPER FELT)	Part	PA-PD-390	/1////			1.0000	
8849913	PAD (PAPER FELT) (ALT)	Part	PA-PD-390	/2////			1.0000	
8849913	PAD (KRAFT PAPER) (ALT)	Part	UU-P-288	//A///			1.0000	
8849913	PAD (PAPER BOARD) (ALT)	Part	PPP-P-291	/3////			1.0000	
								7.04770000

MIDAS: Detailed Structure C276

Nomenclature:	CTG 81MM SMK WP M375 W/FUZE
NSN:	1315007825838
DODIC:	C276
Drawing #:	8885264
Family:	CP
Reported weight:	9.3400 LB
Specification:	MIL-C-60028
Remarks:	

#	Type	Drawing#	Nomenclature	Weight
*1	*Munition	*8885264	CTG 81MM SMK WP M375 W/FUZE	*9.34 LB
*2	*Part	*7549026	--HOLDER INCREMENT (STEEL)	*0.01 LB
*3	*Bulk item	*	----CD CHROMATE	
*4	*Bulk item	*	----ZN CHROMATE (ALT)	
*5	*Part	*9218640	--PLATE PRESSURE (AL ALLOY)	*0.11 OZ
*6	*Bulk item	*	----ADHESIVE RTV (9233455)	
*7	*Part	*7549014	--LABEL WARNING (TAPE PRESSURE SENSITIVE)	*0.00
*8	*Bulk item	*	----INK PRINTERS (9210876)	
*9	*Part	*7549014	--LABEL WARNING (CELLOPHANE TAPE) (ALT)	*0.00
*10	*Bulk item	*	----INK PRINTERS (9210876)	
*11	*Part	*8846607	--PAD (WOOL FELT)	*0.00
*12	*Component	*8885263	--BODY FILLING ASSY	*9.34 LB
*13	*Part	*	----WHT PHOSPHORUS (WHT PHOSPHOUS)	*1.70 LB
*14	*Compound	*	------WHT PHOSPHOUS (100.00%)	
*15	*Part	10521905	----CASING BURSTER M158 (AL ALLOY)	*0.37 LB
*16	*Bulk item	*	------WHITE PB (ALT)	
*17	*Bulk item	*	------LINSEED OIL (ALT)	
*18	*Bulk item	*	------WHITE PB (ALT)	
*19	*Bulk item	*	------PETTMAN CEMENT	
*20	*Part	10521905	----CASING BURSTER M158 (AL ALLOY) (ALT)	*0.00
*21	*Bulk item	*	------WHITE PB (ALT)	
*22	*Bulk item	*	------LINSEED OIL (ALT)	
*23	*Bulk item	*	------WHITE PB (ALT)	
*24	*Bulk item	*	------PETTMAN CEMENT	
*25	*Part	10534925	----OBTURATING RING (ACETAL MOLDING)	*2.20 GM
*26	*Component	10522511	----PROJ 81MM WP M375A1 ASSY	*0.00
*27	*Part	10535864	------BODY (STEEL)	*5.60 LB
*28	*Bulk item		--------ZN PHOSPHATE	
*29	*Bulk item	*	--------ENAMEL	
*30	*Bulk item	*	--------ENAMEL (ALT)	

*31	*Bulk item	*	--------LACQUER (ALT)	
*32	*Bulk item	*	--------STENCIL INK	
*33	*Bulk item	*	--------INK MARKING (ALT)	
*34	*Bulk item	*	--------PETTMAN CEMENT	
*35	*Part	10535864	------BODY (STEEL) (ALT)	*0.00
*36	*Bulk item	*	--------ZN PHOSPHATE	
*37	*Bulk item	*	--------ENAMEL	
*38	*Bulk item	*	--------ENAMEL (ALT)	
*39	*Bulk item	*	--------LACQUER (ALT)	
*40	*Bulk item	*	--------STENCIL INK	
*41	*Bulk item	*	--------INK MARKING (ALT)	
*42	*Bulk item	*	--------PETTMAN CEMENT	
*43	*Part	10535864	------BODY (STEEL) (ALT)	*0.00
*44	*Bulk item	*	--------ZN PHOSPHATE	
*45	*Bulk item	*	--------ENAMEL	
*46	*Bulk item	*	--------ENAMEL (ALT)	
*47	*Bulk item	*	--------LACQUER (ALT)	
*48	*Bulk item	*	--------STENCIL INK	
*49	*Bulk item	*	--------INK MARKING (ALT)	
*50	*Bulk item	*	--------PETTMAN CEMENT	
*51	*Component	10535862	------BODY ASSY ALTERNATE 1 (ALT)	*0.00
*52	*Part	10535866	--------BODY ALTERNATE 1 (STEEL)	*0.00
*53	*Bulk item	*	----------ZN PHOSPHATE	
*54	*Bulk item	*	----------ENAMEL	
*55	*Bulk item	*	----------ENAMEL (ALT)	
*56	*Bulk item	*	----------LACQUER	
*57	*Bulk item	*	----------STENCIL INK	
*58	*Bulk item	*	----------INK MARKING (ALT)	
*59	*Bulk item	*	----------PETTMAN CEMENT	
*60	*Part	10535866	--------BODY ALTERNATE 1 (STEEL)	*0.00
*61	*Bulk item	*	----------ZN PHOSPHATE	
*62	*Bulk item	*	----------ENAMEL	
*63	*Bulk item	*	----------ENAMEL (ALT)	
*64	*Bulk item	*	----------LACQUER (ALT)	
*65	*Bulk item	*	----------STENCIL INK	
*66	*Bulk item	*	----------INK MARKING (ALT)	
*67	*Bulk item	*	----------PETTMAN CEMENT	
*68	*Part	10535866	--------BODY ALTERNATE 1 (STEEL)	*0.00
*69	*Bulk item	*	----------ZN PHOSPHATE	
*70	*Bulk item	*	----------ENAMEL	

*71	*Bulk item	*	----------ENAMEL (ALT)	
*72	*Bulk item	*	----------LACQUER (ALT)	
*73	*Bulk item	*	----------STENCIL INK	
*74	*Bulk item	*	----------INK MARKING (ALT)	
*75	*Bulk item	*	----------PETTMAN CEMENT	
*76	*Part	10535863	--------ADAPTER BASE (STEEL) (ALT)	*0.35 LB
*77	*Bulk item	*	----------ZN PHOSPHATE	
*78	*Bulk item	*	----------ZN CHROMATE (ALT)	
*79	*Bulk item	*	----------ENAMEL	
*80	*Bulk item	*	----------PRIMER	
*81	*Bulk item	*	----------CORROSION PREVENTIVE CMPD	
*82	*Bulk item	*	----------SILICONE COMPOUND	
*83	*Bulk item	*	----------BRAZING	
*84	*Bulk item	*	----------PETTMAN CEMENT	
*85	*Bulk item	*	----------SHELLAC (9233504) (ALT)	
*86	*Part	10535863	--------ADAPTER BASE (STEEL) (ALT)	*0.35 LB
*87	*Bulk item	*	----------ZN PHOSPHATE	
*88	*Bulk item	*	----------ZN CHROMATE (ALT)	
*89	*Bulk item	*	----------ENAMEL	
*90	*Bulk item	*	----------PRIMER	
*91	*Bulk item	*	----------CORROSION PREVENTIVE CMPD	
*92	*Bulk item	*	----------SILICONE COMPOUND	
*93	*Bulk item	*	----------BRAZING	
*94	*Bulk item	*	----------PETTMAN CEMENT	
*95	*Bulk item	*	----------SHELLAC (9233504) (ALT)	
*96	*Component	*8846600	--BURSTER PROJ M47 ASSY	*0.00
*97	*Part	*8846603	----TUBE BURSTER (AL ALLOY)	*0.05 LB
*98	*Bulk item	*	------ADHESIVE	
*99	*Bulk item	*	------LACQUER CELL NITRATE (ALT)	
*100	*Part	*8846604	----TUBE BURSTER (STEEL) (ALT)	*0.07 LB
*101	*Bulk item	*	------ADHESIVE	
*102	*Bulk item	*	------LACQUER CELL NITRATE (ALT)	
*103	*Part	*8846601	----PELLET (PELLET EXPL COMP)	11.70 GM
*104	*Compound	*	------RDX (98.50%)	
*105	*Compound	*	------STEARIC ACID (1.50%)	
*106	*Part	*	----PEP (RDX) (ALT)	11.70 GM
*107	*Compound	*	------RDX (100.00%)	
*108	*Part	*	----PEP (COMP A5 (RDX 98.5%)) (ALT)	11.70 GM
*109	*Compound	*	------RDX (98.50%)	
*110	*Compound	*	------STEARIC ACID (1.50%)	

*111	*Component	*9233373	--CTG IGN M66A1	*0.00
*112	*Part	*8837348	----LINER (BRASS)	*0.01 LB
*113	*Part	*8837349	----DISC CLOSING (CHIPBOARD)	*0.00
*114	*Bulk item	*	------LACQUER CELL NITRATE	
*115	*Bulk item	*	------STENCIL INK	
*116	*Bulk item	*	------TAPE PRESSURE SENS (9233459)	
*117	*Part	*	----PROP M9 FLAKE (PROP M9 FLAKE)	115.00 GR
*118	*Compound	*	------ETHYL CENTRALITE (0.75%)	
*119	*Compound	*	------K NITRATE (1.50%)	
*120	*Compound	*	------NC (57.75%)	
*121	*Compound	*	------NITROGLYCERIN (40.00%)	
*122	*Component	*9235614	----BODY ASSY	*0.00
*123	*Part	9235614*1	------TUBE OUTER (PAPER)	*0.00
*124	*Bulk item	*	--------ADHESIVE RTV (9233455)	
*125	*Bulk item	*	--------ADHESIVE	
*126	*Bulk item	*	--------LACQUER CELL NITRATE	
*127	*Bulk item	*	--------TAPE PRESSURE SENS (9233459)	
*128	*Part	9235614*2	------TUBE INSERT (PAPER)	*0.00
*129	*Bulk item	*	--------ADHESIVE	
*130	*Component	*9235613	------TUBE ASSY	*0.00
*131	*Part	*9235612	--------DISC (PAPER FLUORECENT)	*0.00
*132	*Bulk item	*	----------ADHESIVE	
*133	*Bulk item	*	----------ADHESIVE (ALT)	
*134	*Part	*8837355	--------TUBE PAPER (PAPER)	*0.00
*135	*Bulk item	*	----------ADHESIVE	
*136	*Bulk item	*	----------ADHESIVE (ALT)	
*137	*Bulk item	*	----------ADHESIVE	
*138	*Part	*8837352	--------COVER (PAPER ONIONSKIN)	*0.00
*139	*Bulk item	*	----------ADHESIVE	
*140	*Bulk item	*	----------ADHESIVE (ALT)	
*141	*Part	*8837354	--------WASHER (CHIPBOARD)	*0.00
*142	*Bulk item	*	----------ADHESIVE	
*143	*Bulk item	*	----------ADHESIVE (ALT)	
*144	*Bulk item	*	----------SHELLAC	
*145	*Component	*7549173	--PRIMER PERC M71A2	*0.00
*146	*Part	*7549176	----BODY (AL ALLOY)	*8.04 GM
*147	*Bulk item	*	------LACQUER CELL NITRATE	
*148	*Bulk item	*	------SEALING COMPOUND	
*149	*Bulk item	*	------SEALING COMPOUND (ALT)	
*150	*Bulk item	*	------SEALING COMPOUND	

*151	*Bulk item	*	------GRAPHITE	
*152	*Part	*7549178	----DISC CLOSING (AL FOIL)	*0.00
*153	*Bulk item	*	------LACQUER CELL NITRATE	
*154	*Part	*7549174	----HEAD (AL ALLOY)	*6.85 GM
*155	*Bulk item	*	------PETTMAN CEMENT	
*156	*Bulk item	*	------SHELLAC (9233504) (ALT)	
*157	*Bulk item	*	------SEALING COMPOUND	
*158	*Bulk item	*	------SEALING COMPOUND (ALT)	
*159	*Bulk item	*	------SEALING COMPOUND	
*160	*Part	*7549175	----PLUG FIRING (AL ALLOY)	*0.79 GM
*161	*Part	*7549177	----PELLET (BLACK PWDR CL 7)	*3.12 GR
*162	*Compound	*	------K NITRATE (74.00%)	
*163	*Compound	*	------S (10.40%)	
*164	*Compound	*	------CHARCOAL (15.60%)	
*165	*Component	*8840536	----PRIMER PERC M35 ASSY	*0.00
*166	*Part	*8840537	------CUP (CU ALLOY)	*0.00
*167	*Bulk item	*	--------LACQUER CELL NITRATE	
*168	*Part	*8840534	------COVER (PAPER SEALING)	*0.00
*169	*Bulk item	*	--------ETHYL ALCOHOL	
*170	*Bulk item	*	--------ACETONE (ALT)	
*171	*Part	*8840535	------ANVIL (CU ALLOY)	*0.00
*172	*Part	*	------PEP (PRIMER MIX #70)	*0.37 GR
*173	*Compound	*	--------PB THIOCYANATE (25.00%)	
*174	*Compound	*	--------K CHLORATE (53.00%)	
*175	*Compound	*	--------SB SULFIDE (17.00%)	
*176	*Compound	*	--------TNT (5.00%)	
*177	*Part	*	------PEP (PRIMER MIX #70 (G/G)) (ALT)	*0.48 GR
*178	*Compound	*	--------PB THIOCYANATE (22.50%)	
*179	*Compound	*	--------K CHLORATE (50.50%)	
*180	*Compound	*	--------SB SULFIDE (14.50%)	
*181	*Compound	*	--------TNT (2.50%)	
*182	*Compound	*	--------GROUND GLASS (10.00%)	
*183	*Component	* 10520200	--FIN ASSY M149	*0.00
*184	*Part	*7549028	----HOUSING CTG (AL ALLOY)	*0.45 LB
*185	*Bulk item	*	------SEALING COMPOUND (10551921)	
*186	*Bulk item	*	------ADHESIVE RTV (9233455)	
*187	*Bulk item	*	------PETTMAN CEMENT	
*188	*Bulk item	*	------SHELLAC (9233504) (ALT)	
*189	*Part	*7549028	----HOUSING CTG (AL ALLOY) (ALT)	*0.45 LB
*190	*Bulk item	*	------SEALING COMPOUND (10551921)	

*191	*Bulk item	*	------ADHESIVE RTV (9233455)	
*192	*Bulk item	*	------PETTMAN CEMENT	
*193	*Bulk item	*	------SHELLAC (9233504) (ALT)	
*194	*Part	*7549028	----HOUSING CTG (AL ALLOY) (ALT)	*0.45 LB
*195	*Bulk item	*	------SEALING COMPOUND (10551921)	
*196	*Bulk item	*	------ADHESIVE RTV (9233455)	
*197	*Bulk item	*	------PETTMAN CEMENT	
*198	*Bulk item	*	------SHELLAC (9233504) (ALT)	
*199	*Part	*7549027	----HOLDER INCREMENT (STEEL)	*0.01 LB
*200	*Bulk item	*	------CD CHROMATE	
*201	*Bulk item	*	------ZN CHROMATE (ALT)	
*202	*Part	10520199	----FIN (AL ALLOY)	*0.24 LB
*203	*Bulk item	*	------PETTMAN CEMENT	
*204	*Bulk item	*	------SHELLAC (9233504) (ALT)	
*205	*Bulk item	*	------SEALING COMPOUND (10523979)	
*206	*Bulk item	*	------SEALING COMPOUND (10551921) (ALT)	
*207	*Component	*8881021	--CHG A PROP INCR M90	*0.00
*208	*Part	*8881022	----BAG PROP (COTTON CLOTH)	*0.00
*209	*Bulk item	*	------INK MARKING LNDRY BLK	
*210	*Bulk item	*	------THREAD SILK	
*211	*Bulk item	*	------THREAD SILK (ALT)	
*212	*Bulk item	*	------THREAD SILK (ALT)	
*213	*Bulk item	*	------THREAD TREATED (ALT)	
*214	*Bulk item	*	------THREAD POLYESTER (ALT)	
*215	*Bulk item	*	------INK PRINTERS (9210876) (ALT)	
*216	*Bulk item	*	------DYE FUGITIVE YLW	
*217	*Part	*	----PROP M9 FLAKE (PROP M9 FLAKE)	184.00 GR
*218	*Compound	*	------ETHYL CENTRALITE (0.75%)	
*219	*Compound	*	------K NITRATE (1.50%)	
*220	*Compound	*	------NC (57.75%)	
*221	*Compound	*	------NITROGLYCERIN (40.00%)	
*222	*Component	*8881023	--CHG B PROP INCR M90	*0.00
*223	*Part	*8881024	----BAG PROP (COTTON CLOTH)	*0.00
*224	*Bulk item	*	------INK MARKING LNDRY BLK	
*225	*Bulk item	*	------THREAD SILK	
*226	*Bulk item	*	------THREAD SILK (ALT)	
*227	*Bulk item	*	------THREAD SILK (ALT)	
*228	*Bulk item	*	------THREAD TREATED (ALT)	
*229	*Bulk item	*	------THREAD POLYESTER (ALT)	
*230	*Bulk item	*	------INK PRINTERS (9210876) (ALT)	

*231	*Part	*	----PROP M9 FLAKE (PROP M9 FLAKE)	*168.00 GR
*232	*Compound	*	------ETHYL CENTRALITE (0.75%)	
*233	*Compound	*	------K NITRATE (1.50%)	
*234	*Compound	*	------NC (57.75%)	
*235	*Compound	*	------NITROGLYCERIN (40.00%)	
*236	*Component	*9205729	--FUZE PD M524A5	*1.27 LB
*237	*Part	*8797516	----CUP BOOSTER (AL ALLOY)	*0.00
*238	*Bulk item	*	------ANODIC COATING	
*239	*Bulk item	*	------SEALER (9220862)	
*240	*Part	*8797516	----CUP BOOSTER (AL ALLOY) (ALT)	*0.00
*241	*Bulk item	*	------ANODIC COATING	
*242	*Bulk item	*	------SEALER (9220862)	
*243	*Part	*8797515	----PAD (WOOL FELT)	*13.80 GR
*244	*Part	*9255199	----LABEL WARNING (TAPE PRESSURE SENSITIVE)	*0.00
*245	*Bulk item	*	------STENCIL INK	
*246	*Part	*9255199	----LABEL WARNING (CELLOPHANE TAPE) (ALT)	*0.00
*247	*Bulk item	*	------STENCIL INK	
*248	*Component	*9205730	----BODY & STRIKER ASSY	*0.00
*249	*Part	*9205731	------BODY FUZE (AL ALLOY)	*0.00
*250	*Bulk item	*	--------ANODIC COATING	
*251	*Bulk item	*	--------SEALER (9215624) (ALT)	
*252	*Bulk item	*	--------STENCIL INK	
*253	*Bulk item	*	--------LUBRICANT VYDAX #525	
*254	*Bulk item	*	--------SEALER (9220862)	
*255	*Bulk item	*	--------ADHESIVE RUBBER	
*256	*Part	*9205731	------BODY FUZE (AL ALLOY) (ALT)	*0.00
*257	*Bulk item	*	--------ANODIC COATING	
*258	*Bulk item	*	--------STENCIL INK	
*259	*Bulk item	*	--------LUBRICANT VYDAX #525	
*260	*Bulk item	*	--------SEALER (9215624) (ALT)	
*261	*Bulk item	*	--------SEALER (9220862)	
*262	*Bulk item	*	--------ADHESIVE RUBBER	
*263	*Part	*9205731	------BODY FUZE (AL ALLOY) (ALT)	*0.00
*264	*Bulk item	*	--------ANODIC COATING	
*265	*Bulk item	*	--------STENCIL INK	
*266	*Bulk item	*	--------LUBRICANT VYDAX #525	
*267	*Bulk item	*	--------SEALER (9220862)	
*268	*Bulk item	*	--------SEALER (9215624) (ALT)	
*269	*Bulk item	*	--------ADHESIVE RUBBER	
*270	*Part	*9205731	------BODY FUZE (AL ALLOY) (ALT)	*0.00

*271	*Bulk item	*	--------ANODIC COATING	
*272	*Bulk item	*	--------STENCIL INK	
*273	*Bulk item	*	--------LUBRICANT VYDAX #525	
*274	*Bulk item	*	--------SEALER (9220862)	
*275	*Bulk item	*	--------SEALER (9215624) (ALT)	
*276	*Bulk item	*	--------ADHESIVE RUBBER	
*277	*Part	*9205731	------BODY FUZE (AL ALLOY) (ALT)	*0.00
*278	*Bulk item	*	--------ANODIC COATING	
*279	*Bulk item	*	--------STENCIL INK	
*280	*Bulk item	*	--------LUBRICANT VYDAX #525	
*281	*Bulk item	*	--------SEALER (9220862)	
*282	*Bulk item	*	--------SEALER (9215624) (ALT)	
*283	*Bulk item	*	--------ADHESIVE RUBBER	
*284	*Component	*8797603	------STRIKER ASSY	*0.00
*285	*Part	*8797604	--------STRIKER (AL ALLOY)	*0.00
*286	*Bulk item	*	----------ANODIC COATING	
*287	*Bulk item	*	----------LUBRICANT VYDAX #525	
*288	*Bulk item	*	----------SEALER (9215624) (ALT)	
*289	*Bulk item	*	----------ADHESIVE RUBBER	
*290	*Part	*8797604	--------STRIKER (AL ALLOY) (ALT)	*0.00
*291	*Bulk item	*	----------ANODIC COATING	
*292	*Bulk item	*	----------LUBRICANT VYDAX #525	
*293	*Bulk item	*	----------SEALER (9215624) (ALT)	
*294	*Bulk item	*	----------ADHESIVE RUBBER	
*295	*Part	*8797604	--------STRIKER (AL ALLOY) (ALT)	*0.00
*296	*Bulk item	*	----------ANODIC COATING	
*297	*Bulk item	*	----------LUBRICANT VYDAX #525	
*298	*Bulk item	*	----------SEALER (9215624) (ALT)	
*299	*Bulk item	*	----------ADHESIVE RUBBER	
*300	*Part	*8797604	--------STRIKER (AL ALLOY) (ALT)	*0.00
*301	*Bulk item	*	----------ANODIC COATING	
*302	*Bulk item	*	----------LUBRICANT VYDAX #525	
*303	*Bulk item	*	----------SEALER (9215624) (ALT)	
*304	*Bulk item	*	----------ADHESIVE RUBBER	
*305	*Part	*8797605	--------PIN FIRING (STEEL)	*0.00
*306	*Bulk item	*	----------CD CHROMATE	
*307	*Bulk item	*	----------ADHESIVE RUBBER	
*308	*Bulk item	*	----------SEALER (9215624) (ALT)	
*309	*Part	*8797605	--------PIN FIRING (STEEL) (ALT)	*0.00
*310	*Bulk item	*	----------CD CHROMATE	

*311	*Bulk item	*	----------ADHESIVE RUBBER	
*312	*Bulk item	*	----------SEALER (9215624) (ALT)	
*313	*Part	*8797605	--------PIN FIRING (STEEL) (ALT)	*0.00
*314	*Bulk item	*	----------CD CHROMATE	
*315	*Bulk item	*	----------ADHESIVE RUBBER	
*316	*Bulk item	*	----------SEALER (9215624) (ALT)	
*317	*Part	*8797595	--------PLUG STRIKER (AL ALLOY)	*0.00
*318	*Bulk item	*	----------ANODIC COATING	
*319	*Part	*8797595	--------PLUG STRIKER (AL ALLOY) (ALT)	*0.00
*320	*Bulk item	*	----------ANODIC COATING	
*321	*Part	*8797595	--------PLUG STRIKER (AL ALLOY) (ALT)	*0.00
*322	*Bulk item	*	----------ANODIC COATING	
*323	*Part	*8797595	--------PLUG STRIKER (AL ALLOY) (ALT)	*0.00
*324	*Bulk item	*	----------ANODIC COATING	
*325	*Part	*8797592	--------SPRING STRIKER (SPRING STEEL)	*0.00
*326	*Bulk item	*	----------CD CHROMATE	
*327	*Part	*8886950	--------PLATE INDEX (STEEL)	*0.00
*328	*Bulk item	*	----------CD CHROMATE	
*329	*Part	*8797597	--------SEAL STRIKER (SYNTHETIC RUBBER)	*0.00
*330	*Part	*8797597	--------SEAL STRIKER (SILICONE RUBBER) (ALT)	*0.00
*331	*Part	*8797594	--------PIN STRIKER GUIDE (STEEL)	*0.00
*332	*Bulk item	*	----------CD CHROMATE	
*333	*Part	*8797594	--------PIN STRIKER GUIDE (STEEL) (ALT)	*0.00
*334	*Bulk item	*	----------CD CHROMATE	
*335	*Part	*8797594	--------PIN STRIKER GUIDE (STEEL) (ALT)	*0.00
*336	*Bulk item	*	----------CD CHROMATE	
*337	*Part	*8797594	--------PIN STRIKER GUIDE (STEEL) (ALT)	*0.00
*338	*Bulk item	*	----------CD CHROMATE	
*339	*Part	*8797594	--------PIN STRIKER GUIDE (STEEL) (ALT)	*0.00
*340	*Bulk item	*	----------CD CHROMATE	
*341	*Part	*8797594	--------PIN STRIKER GUIDE (STEEL) (ALT)	*0.00
*342	*Bulk item	*	----------CD CHROMATE	
*343	*Part	*9205739	--------SEAL RETAINER (AL ALLOY)	*0.00
*344	*Bulk item	*	----------ANODIC COATING	
*345	*Bulk item	*	----------ANODIC COATING (ALT)	
*346	*Bulk item	*	----------ANODIC COATING (ALT)	
*347	*Part	*9205739	--------SEAL RETAINING (AL ALLOY) (ALT)	*0.00
*348	*Bulk item	*	----------ANODIC COATING	
*349	*Bulk item	*	----------ANODIC COATING (ALT)	
*350	*Bulk item	*	----------ANODIC COATING (ALT)	

*351	*Part	*9205772	--------SEAL SAFETY PIN PLUNGER (RUBBER)	*0.00
*352	*Part	*8797601	--------DISC PULL WIRE (STEEL)	*7.41 GR
*353	*Bulk item	*	----------CD CHROMATE	
*354	*Part	*8797602	--------SEAL PULL WIRE (RUBBER)	*1.65 GR
*355	*Part	*8797591	--------PIN MECHANISM LOCATING (STEEL)	*11.70 GR
*356	*Bulk item	*	----------CD CHROMATE	
*357	*Bulk item	*	----------ADHESIVE RUBBER	
*358	*Bulk item	*	----------SEALER (9215624) (ALT)	
*359	*Part	*8797591	--------PIN MECHANISM LOCATING (STEEL) (ALT)	*11.70 GR
*360	*Bulk item	*	----------CD CHROMATE	
*361	*Bulk item	*	----------ADHESIVE RUBBER	
*362	*Bulk item	*	----------SEALER (9215624) (ALT)	
*363	*Part	*8797591	--------PIN MECHANISM LOCATING (STEEL) (ALT)	*11.70 GR
*364	*Bulk item	*	----------CD CHROMATE	
*365	*Bulk item	*	----------ADHESIVE RUBBER	
*366	*Bulk item	*	----------SEALER (9215624) (ALT)	
*367	*Part	*8797591	--------PIN MECHANISM LOCATING (STEEL) (ALT)	*11.70 GR
*368	*Bulk item	*	----------CD CHROMATE	
*369	*Bulk item	*	----------ADHESIVE RUBBER	
*370	*Bulk item	*	----------SEALER (9215624) (ALT)	
*371	*Part	*8797591	--------PIN MECHANISM LOCATING (STEEL) (ALT)	*11.70 GR
*372	*Bulk item	*	----------CD CHROMATE	
*373	*Bulk item	*	----------ADHESIVE RUBBER	
*374	*Bulk item	*	----------SEALER (9215624) (ALT)	
*375	*Part	*8797591	--------PIN MECHANISM LOCATING (STEEL) (ALT)	*11.70 GR
*376	*Bulk item	*	----------CD CHROMATE	
*377	*Bulk item	*	----------ADHESIVE RUBBER	
*378	*Bulk item	*	----------SEALER (9215624) (ALT)	
*379	*Part	*8797593	--------PIN SAFETY (STEEL)	*0.00
*380	*Bulk item	*	----------CD CHROMATE	
*381	*Part	*8797593	--------PIN SAFETY (STEEL) (ALT)	*0.00
*382	*Bulk item	*	----------CD CHROMATE	
*383	*Part	*8797593	--------PIN SAFETY (STEEL) (ALT)	*0.00
*384	*Bulk item	*	----------CD CHROMATE	
*385	*Part	*8797593	--------PIN SAFETY (STEEL) (ALT)	*0.00
*386	*Bulk item	*	----------CD CHROMATE	
*387	*Part	*8797593	--------PIN SAFETY (STEEL) (ALT)	*0.00
*388	*Bulk item	*	----------CD CHROMATE	
*389	*Part	*8797593	--------PIN SAFETY (STEEL) (ALT)	*0.00
*390	*Bulk item	*	----------CD CHROMATE	

*391	*Component	*9205732	----ARMING MECHANISM & PLUNGER ASSY	*0.00
*392	*Component	*8797530	------ARMING MECHANISM LOADING ASSY	*0.00
*393	*Part	*8797532	--------CUSHION DETONATOR ROTOR (CORK)	*0.05 GR
*394	*Part	*9234584	--------O-RING (POLYETHYLENE PLASTIC) (ALT)	*0.00
*395	*Part	*9234584	--------O-RING (POLYETHYLENE PLASTIC) (ALT)	*0.00
*396	*Part	*8797533	--------CAP DETONATOR (BRASS)	*0.00
*397	*Component	*8797534	--------ARMING MECHANISM ASSY	*0.00
*398	*Part	*9255358	----------BODY ARMING MECHANISM (AL ALLOY)	*0.00
*399	*Part	*9287560	BODY ARMING MECHANISM (AL ALLOY) (ALT)	*0.00
*400	*Part	*9287560	BODY ARMING MECHANISM (AL ALLOY) (ALT)	*0.00
*401	*Part	*9287560	BODY ARMING MECHANISM (AL ALLOY) (ALT)	*0.00
*402	*Part	*9255359	----------ROTOR (ZN ALLOY)	*0.00
*403	*Bulk item	*	----------CHROMATE COATING	
*404	*Part	*8797536	----------PIN CREEP (BRASS)	*0.00
*405	*Part	*8797536	----------PIN CREEP (STAINLESS STEEL) (ALT)	*0.00
*406	*Part	*8797541	----------SPRING CREEP (STAINLESS STEEL)	*0.00
*407	*Part	*8797538	PLATE SPRING SUPPORT (STAINLESS STEEL)	*0.00
*408	*Part	*8797540	----------SPRING DRIVE (STEEL)	*0.00
*409	*Bulk item	*	----------LUBRICATING OIL	
*410	*Part	*8797537	----------PLATE RETAINING (AL ALLOY)	*20.00 GR
*411	*Bulk item	*	----------ANODIC COATING	
*412	*Part	*8797537	----------PLATE RETAINING (AL ALLOY) (ALT)	*20.00 GR
*413	*Bulk item	*	----------ANODIC COATING	
*414	*Part	*8797537	----------PLATE RETAINING (AL ALLOY) (ALT)	*20.00 GR
*415	*Bulk item	*	----------ANODIC COATING	
*416	*Part	*8797537	----------PLATE RETAINING (AL ALLOY) (ALT)	*20.00 GR
*417	*Bulk item	*	----------ANODIC COATING	
*418	*Part	*8797537	----------PLATE RETAINING (AL ALLOY) (ALT)	*20.00 GR
*419	*Bulk item	*	----------ANODIC COATING	
*420	*Part	*8797537	----------PLATE RETAINING (AL ALLOY) (ALT)	*20.00 GR
*421	*Bulk item	*	----------ANODIC COATING	
*422	*Part	*9232794	----------SCREW THREAD ROLLING (STEEL)	*0.00
*423	*Part	MS24628-1	----------SCREW SELF TAPPING (STEEL) (ALT)	*0.00
*424	*Bulk item	*	----------PASSIVATE TREATMENT	
*425	*Component	*8797547	----------SETBACK DEVICE ASSY	*0.00
*426	*Part	*8797549	----------SPRING SEGMENT (STAINLESS STEEL)	*0.00
*427	*Part	*8797550	----------SPRING TRIGGER (STAINLESS STEEL)	*0.00
*428	*Part	*8797550	SPRING TRIGGER (STAINLESS WIRE) (ALT)	*0.00
*429	*Part	*9272045	----------FRAME REAR (BRASS)	*0.00
*430	*Part	*9272045	----------FRAME REAR (BRASS) (ALT)	*0.00

DODAC	Type	Quantity	Search	Printout	Page(s)
G839	CTG. 7.62MM NATO GREN RIFLE M64	525	Internet	Yes	3
G878	FUZE	340	Not Found	No	
G922	GREN HAND RIOT CS M47 W/FUZE M227	16	Internet	Yes	3
G924	GRENADE RIOT CS	33	Not Found	No	
G930	GREN HAND SMK HC AN-M8	541	CD ROM	Yes	2
G932	GREN HAND SMK RED M48 W/M227 FUZE	9	Internet	Yes	3
G940	GREN HAND SMK GRN M18	306	CD ROM	Yes	2
G945	GREN HAND SMK YLW M18	394	CD ROM	Yes	2
G950	GREN HAND SMK RED M18	183	CD ROM	Yes	2
G955	GREN HAND SMK VIO M18	331	CD ROM	Yes	2
G963	GREN HAND RIOT CS	82	Internet	Yes	5
H708	35 MM PRACTICE	2339	Not Found	No	
K051	FUZE COMB	42	Not Found	No	
K058	FUZE MINE M605	15	CD ROM	Yes	2
K145	MINE APERS M18A1 W/ACCESSORIES	76	Internet	Yes	4
K765	CAPSULE CS	114	Not Found	No	
L116	DISTRESS KIT (GRN-RED-WHT)	7	Not Found	No	
L117	DISTRESS KIT (RED)	2	Not Found	No	
L279	SIGNAL ILLUM (WHT STAR CLU)	1	Not Found	No	
L280	SIGNAL ILLUM (GRN STAR CLU)	6	Not Found	No	
L305	SIGNAL ILLUM (GRN STAR CLU)	74	Not Found	No	
L306	SIGNAL ILLUM GRND M158	88	CD ROM	Yes	3
L307	SIGNAL ILLUM GRND M159	93	CD ROM	Yes	3
L311	SIGNAL ILLUM GRND RED STAT PARA M126	35	Internet	Yes	4
L312	SIGNAL ILLUM GRND M127	230	CD ROM	Yes	3
L314	SIGNAL ILLUM GRND M125A1	256	CD ROM	Yes	3
L367	SIMULATOR A-T ROCKET	180	Not Found	No	
L378	SIMULATOR EXPLOS M-80	1450	Not Found	No	
L495	FLARE TRIP	194	Not Found	No	
L592	SIMULATOR TOW BLASTING	1570	Not Found	No	
L594	SIMULATOR PROJ GRND BURST M115A2	1374	CD ROM	Yes	2
L598	SIMULATOR BOOBY TRAP FL	290	Not Found	No	
L599	SIMULATOR BOOBY TRAP M118 ILLUM	21	Internet	Yes	3
L600	SIMULATOR BOOBY TRAP M119 WHISTLE	467	Internet	Yes	3
L601	SIMULATOR HAND GREN M116A1	541	CD ROM	Yes	1
L602	SIMULATOR ARTY GRENADE	131	Not Found	No	
Notes:					
DODAC	Department of Defense Activity Code				
Quantity	Quantity of ammunition expended by type in 1989				
Search	Search through the MIDAS database in CD ROM & Internet				

LIST OF ACRONYMS AND ABBREVIATIONS					
BLK	BLANK				
CHG	CHARGE				
CTG	CARTRIDGE				
GRN	GREEN				
GREN	GRENADE				
HE	HIGH EXPLOSIVE				
ILLUM	ILLUMINATION				
PROJ	PROJECTILE				
PROP	PROPELLANT				
SMK	SMOKE				
VIO	VIOLET				
WHT	WHITE				
WP	WHITE PHOSPH				
YLW	YELLOW				

MIDAS: Detailed Structure G839

Nomenclature: CTG 7.62MM NATO GREN RIFLE M64
NSN: 1330003011989
DODIC: G839
Drawing #: 7553707
Family: SA
Reported weight: 241.0000 grains
Specification: MIL-C-46666
Remarks:

#	Type	Drawing#	Nomenclature	Weight
1	Munition	7553707	CTG 7.62MM NATO GREN RIFLE M64	241.00 GR
2	Component	7553707	--CTG 7.62MM NATO GREN RIFLE M64	241.00 GR
3	Part	7553772	----CASE (CU ALLOY)	190.00 GR
4	Compound		------CU (70.00%)	
5	Compound		------PB (0.07%)	
6	Compound		------FE (0.05%)	
7	Compound		------ZN (29.88%)	
8	Bulk item		------ASPHALT COMPOUND	
9	Bulk item		------LACQUER CELL NITRATE	
10	Bulk item		------THINNER DOPE/LACQUER	
11	Part		----PROP WC830 (PROP WC830)	45.00 GR
12	Compound		------NC (N 13.15%) (73.17%)	
13	Compound		------GRAPHITE (0.40%)	
14	Compound		------NA SULFATE (0.50%)	
15	Compound		------CA CARBONATE (1.00%)	
16	Compound		------NITROGLYCERIN (19.00%)	
17	Compound		------DIPHENYLAMINE (1.13%)	
18	Compound		------K SULFATE (0.80%)	
19	Compound		------DIBUTYLPHTHALATE (4.00%)	
20	Part		----PROP IMR 8097 (PROP IMR 8097) (ALT)	40.00 GR
21	Compound		------NC (N 13.15%) (95.68%)	
22	Compound		------DIPHENYLAMINE (0.87%)	
23	Compound		------GRAPHITE (0.40%)	
24	Compound		------DINITROTOLUENE (2.50%)	
25	Compound		------K SULFATE (0.55%)	
26	Part		----PROP HPC 4 (PROP HPC 4) (ALT)	37.00 GR
27	Compound		------NC (N 13.25%) (74.85%)	
28	Compound		------GRAPHITE (0.40%)	
29	Compound		------NITROGLYCERIN (20.00%)	
30	Compound		------DIPHENYLAMINE (1.00%)	
31	Compound		------K SULFATE (1.00%)	
32	Compound		------ETHYL CENTRALITE (1.00%)	
33	Compound		------CORN STARCH (1.75%)	

34	Part	5196636	----WAD (PRESSED PAPER)	0.00
35	Component	10522621	----PRIMER PERC #34	5.43 GR
36	Part	8594095	------CUP PRIMER (CU ALLOY)	3.50 GR
37	Bulk item		--------LACQUER (ALT)	
38	Bulk item		--------LACQUER CELL NITRATE (ALT)	
39	Bulk item		--------SHELLAC	
40	Part	10522622	------PELLET BOOSTER (PRIMER COMP FA-956)	0.60 GR
41	Compound		--------SB SULFIDE (15.00%)	
42	Compound		--------BA NITRATE (32.00%)	
43	Compound		--------PB STYPHNATE (37.00%)	
44	Compound		--------TETRACENE (4.00%)	
45	Compound		--------PETN (5.00%)	
46	Compound		--------AL PWDR (7.00%)	
47	Part	8594098	------DISC (PAPER SEALING)	0.00
48	Bulk item		--------ETHYL ACETATE	
49	Bulk item		--------LACQUER CELL NITRATE	
50	Bulk item		--------LACQUER	
51	Bulk item		--------SHELLAC	
52	Bulk item		--------SHELLAC (ALT)	
53	Part	8594096	------ANVIL (CU ALLOY)	1.07 GR
54	Bulk item		--------SHELLAC	
55	Bulk item		--------LACQUER CELL NITRATE (ALT)	
56	Bulk item		--------THINNER DOPE/LACQUER	
57	Component	10535489	----PRIMER PERC #43 (ALT)	5.15 GR
58	Part	8594095	------CUP PRIMER (CU ALLOY)	3.50
59	Bulk item		--------LACQUER CELL NITRATE	
60	Bulk item		--------THINNER DOPE/LACQUER	
61	Bulk item		--------SHELLAC	
62	Bulk item		--------SHELLAC (ALT)	
63	Bulk item		--------SHELLAC (ALT)	
64	Bulk item		--------LACQUER (ALT)	
65	Part	10535490	------PELLET (PRIMER MIX FA-1023)	0.58 GR
66	Compound		--------PB STYPHNATE (38.00%)	
67	Compound		--------TETRACENE (4.00%)	
68	Compound		--------BA NITRATE (39.00%)	
69	Compound		--------SB SULFIDE (12.00%)	
70	Compound		--------AL PWDR (7.00%)	
71	Part	8594098	------DISC (PAPER SEALING)	0.04 GR
72	Bulk item		--------SHELLAC	
73	Bulk item		--------SHELLAC (ALT)	
74	Part	8594096	------ANVIL (CU ALLOY)	1.07 GR
75	Bulk item		--------SHELLAC	
76	Bulk item		--------SHELLAC (ALT)	
77	Bulk item		--------SHELLAC (ALT)	

78	Bulk item		--------LACQUER CELL NITRATE (ALT)	
79	Bulk item		--------LACQUER (ALT)	
80	Part	8596120	------ANVIL (CU ALLOY) (ALT)	1.68 GR
81	Bulk item		--------SHELLAC	
82	Bulk item		--------SHELLAC (ALT)	
83	Bulk item		--------SHELLAC (ALT)	
84	Bulk item		--------LACQUER CELL NITRATE (ALT)	
85	Bulk item		--------LACQUER (ALT)	

MIDAS: Detailed Structure G922

Nomenclature: GREN HAND RIOT CS M47 W/FUZE M227
NSN: 1330004776704
DODIC: G922
Drawing #: 13-25-70
Family: CR
Reported weight: 410.0000 GM
Specification: MIL-G-51375
Remarks:

#	Type	Drawing#	Nomenclature	Weight
1	Munition	13-25-70	GREN HAND RIOT CS M47 W/FUZE M227	410.00 GM
2	Part		--RIOT MIX CS (RIOT MIX CS)	185.00 GM
3	Compound		----K CHLORATE (27.00%)	
4	Compound		----CS (40.00%)	
5	Compound		----NC (3.00%)	
6	Compound		----SUGAR (18.00%)	
7	Compound		----MG CARBONATE (12.00%)	
8	Part	13-25-73	--FUZE WELL (POLYETHYLENE PLASTIC)	0.00 LB
9	Bulk item		----ADHESIVE 3M	
10	Bulk item		----ADHESIVE 3M (ALT)	
11	Part	13-25-76	--PLUG (PLASTIC)	0.00
12	Bulk item		----ADHESIVE 3M	
13	Bulk item		----ADHESIVE 3M (ALT)	
14	Component	13-25-72	--GREN BODY ASSY	0.00
15	Component	13-25-77	----UPPER BODY ASSY	0.00
16	Part	13-25-79	------FUZE INSERT (AL ALLOY)	0.00 LB
17	Part	13-25-79	------FUZE INSERT (AL ALLOY) (ALT)	0.00
18	Part	13-25-77-1	------UPPER BODY (BUTYL RUBBER)	0.00
19	Component	13-25-78	----LOWER BODY ASSY	0.00
20	Part	13-25-80	------FILLING INSERT (AL ALLOY)	0.00 LB
21	Part	13-25-80	------FILLING INSERT (AL ALLOY) (ALT)	0.00
22	Part	13-25-78-1	------LOWER BODY (BUTYL RUBBER)	0.00
23	Component	13-10-40	--FUZE HAND GREN M227	0.00
24	Part	13-10-41	----FUZE BODY (AL ALLOY)	24.50 GM
25	Bulk item		------GREASE	
26	Bulk item		------PETTMAN CEMENT	
27	Bulk item		------ANODIC COATING	
28	Part	13-10-41	----FUZE BODY (AL ALLOY) (ALT)	24.50 GM
29	Bulk item		------GREASE	
30	Bulk item		------ANODIC COATING	
31	Bulk item		------ANODIC COATING (ALT)	
32	Bulk item		------PETTMAN CEMENT	
33	Part	13-10-41	----FUZE BODY (AL ALLOY) (ALT)	24.50 GM

34	Bulk item		------GREASE	
35	Bulk item		------PETTMAN CEMENT	
36	Bulk item		------ANODIC COATING	
37	Bulk item		------ANODIC COATING (ALT)	
38	Part	13-10-42	----HANDLE (STEEL)	0.00
39	Bulk item		------ZN CHROMATE	
40	Bulk item		------STENCIL INK	
41	Part	13-10-43	----FIRING PIN (STAINLESS STEEL)	0.00
42	Part	13-10-45	----ARMING PIN (AL ALLOY)	0.00
43	Bulk item		------ANODIC COATING	
44	Bulk item		------ANODIC COATING (ALT)	
45	Bulk item		------CHROMATE COATING (ALT)	
46	Part	13-10-46	----SAFETY LATCH (STEEL)	0.00
47	Bulk item		------ZN CHROMATE	
48	Part	13-10-48	----ARMING PIN SPRING (STEEL WIRE)	0.00
49	Bulk item		------NI PLATING	
50	Part	13-10-49	----FIRING PIN SPRING (STEEL WIRE)	0.00
51	Bulk item		------NI PLATING	
52	Part	13-10-52	----SAFETY LATCH SPRING (STEEL)	0.00
53	Bulk item		------ZN PLATED	
54	Part	13-10-9	----RING PULL (STEEL WIRE)	0.00
55	Bulk item		------ZN CHROMATE	
56	Part	13-10-9	----RING PULL (STEEL WIRE) (ALT)	0.00
57	Bulk item		------ZN CHROMATE	
58	Part	MS24665-138	----PIN COTTER (STEEL)	0.00
59	Bulk item		------CD CHROMATE	
60	Bulk item		------PHOSPHATE COATING (ALT)	
61	Part	MS29513-008	----O-RING (TEFLON)	0.00
62	Bulk item		------GREASE	
63	Part	13-10-43	----FIRING PIN (STAINLESS STEEL) (ALT)	0.00
64	Part	13-10-43	----FIRING PIN (STAINLESS STEEL) (ALT)	0.00
65	Part	MS16562-103	----PIN SPRING (STEEL)	0.00 LB
66	Bulk item		------CD CHROMATE	
67	Bulk item		------PHOSPHATE COATING (ALT)	
68	Part	MS20427-2C3	----RIVET (STEEL)	0.00
69	Bulk item		------CD CHROMATE	
70	Bulk item		------BLACK OXIDE COATING (ALT)	
71	Part	151-1-22	----WASHER FLAT (STEEL)	0.00
72	Bulk item		------CD CHROMATE	
73	Component	13-10-35	----CHG ASSY	0.00
74	Part	13-10-44	------CHG BODY (AL ALLOY)	0.00
75	Bulk item		--------ANODIC COATING	
76	Bulk item		--------ANODIC COATING (ALT)	
77	Bulk item		--------CHROMATE COATING (ALT)	

78	Part		------FIRST FIRE MIX 10 (FIRST FIRE MIX 10)	0.35 GM
79	Compound		--------SI (25.00%)	
80	Compound		--------PB RED (50.00%)	
81	Compound		--------TI PWDR (25.00%)	
82	Part		------IGN MIX 3 (IGN MIX 3)	0.30 GM
83	Compound		--------FE OXIDE (49.10%)	
84	Compound		--------TI PWDR (31.91%)	
85	Compound		--------ZR (17.19%)	
86	Compound		--------NC (1.80%)	
87	Part		------DELAY MIX 5 (DELAY MIX 5)	1.60 GM
88	Compound		--------SI (20.00%)	
89	Compound		--------PB RED (80.00%)	
90	Part	13-10-35-1	------DISC (AL FOIL)	0.00
91	Bulk item		--------SHELLAC	
92	Bulk item		--------ANODIC COATING (ALT)	
93	Bulk item		--------CHROMATE COATING (ALT)	
94	Component	13-10-39	------PRIMER STAB M118 ASSY	0.00
95	Part	8798332	--------CUP DETONATOR (AL ALLOY)	0.04 GM
96	Part	8798333	--------DISC CLOSING (AL FOIL)	0.00
97	Bulk item		----------LACQUER CELL NITRATE	
98	Part	8798333	--------DISC CLOSING (AL ALLOY) (ALT)	0.00 GM
99	Bulk item		----------LACQUER CELL NITRATE	
100	Part		PRIMER MIX NOL#60 (PRIMER MIX NOL #60)	0.11 GM
101	Compound		----------PB STYPHNATE (60.00%)	
102	Compound		----------TETRACENE (5.00%)	
103	Compound		----------SB SULFIDE (10.00%)	
104	Compound		----------BA NITRATE (25.00%)	

USADACS - MIDAS DETAILED STRUCTURE FOR A MUNITION (LESS BULK ITEMS)

Nomenclature: GREN HAND SMK HC AN-M8
NSN: 1330002198511 DODIC: G930 Reported Weight: 1.0000 LB

DRAWING #	NOMENCLATURE	TYPE	SPECIFICATION	TGCS	-- REPORTED --- WEIGHT	UNIT	FACTOR	FACTORED WEIGHT(LB)
13-19-32	GREN HAND SMK HC AN-M8	Munition	MIL-G-12327		1.0000	LB	1.0000	
	WHT SMK MIX 1 (WHT SMK MIX 1)	Part	143-1-1		480.0000	GM	1.0000	1.05840000
	HEXACHLORETHANE (44.53%)	Compound	MIL-H-235					
	ZN OXIDE (46.47%)	Compound	MIL-Z-291	//A/1//				
	AL PWDR (9.00%)	Compound	MIL-A-512	/2/C/4//				
13-20-11	BODY ASSY	Component					1.0000	
13-20-2	BOTTOM (SN PLATE)	Part	MIL-S-10104	/6 OR 7////			1.0000	
13-20-2	BOTTOM (SN PLATE) (ALT)	Part	QQ-T-425	/1/4/75//			1.0000	
13-20-2	BOTTOM (STEEL) (ALT)	Part	ASTM-A308	/1/A///			1.0000	
13-20-2	BOTTOM (STEEL) (ALT)	Part	ASTM-A621	/HRDQ////			1.0000	
13-20-2	BOTTOM (STEEL) (ALT)	Part	ASTM-A619	/CRDQ////			1.0000	
13-20-2	BOTTOM (STEEL) (ALT)	Part	ASTM-A622	/HRDQ////			1.0000	
13-20-2	BOTTOM (STEEL) (ALT)	Part	ASTM-A620				1.0000	
13-20-11	BODY (SN PLATE)	Part	MIL-S-10104	/6 OR 7////			1.0000	
13-20-11	BODY (SN PLATE) (ALT)	Part	QQ-T-425	/1/T3 OR T4/75//			1.0000	
13-20-11	BODY (STEEL) (ALT)	Part	ASTM-A308	/1/A///			1.0000	
13-20-11	BODY (STEEL) (ALT)	Part	ASTM-A619				1.0000	
13-20-11	BODY (STEEL) (ALT)	Part	ASTM-A620	/CR////			1.0000	
13-20-11	BODY (STEEL) (ALT)	Part	ASTM-A621				1.0000	
13-20-11	BODY (STEEL) (ALT)	Part	ASTM-A622				1.0000	
13-19-139	BODY (STEEL) (ALT)	Part	ASTM-A308				1.0000	
13-20-3	TOP ASSY	Component					1.0000	
13-20-5	ADAPTER (BRS)	Part	QQ-B-626	////COMP 11/			1.0000	
13-20-4	TOP (SN PLATE)	Part	MIL-S-10104	/6 OR 7////			1.0000	
13-20-4	TOP (SN PLATE) (ALT)	Part	QQ-T-425	/1/4/75//			1.0000	
13-20-4	TOP (STEEL) (ALT)	Part	ASTM-A308	/1/A///			1.0000	
13-20-4	TOP (STEEL) (ALT)	Part	ASTM-A621	/HRDQ////			1.0000	
13-20-4	TOP (STEEL) (ALT)	Part	ASTM-A619	/CRDQ////			1.0000	
13-20-4	TOP (STEEL) (ALT)	Part	ASTM-A622	/HRDQ////			1.0000	
13-20-4	TOP (STEEL) (ALT)	Part	ASTM-A620	/CR////			1.0000	
13-19-56	TOP ASSY (ALT)	Component					1.0000	
13-22-15	ADAPTER (STEEL)	Part	ASTM-A519	/CD113////			1.0000	
13-22-15	ADAPTER (STEEL) (ALT)	Part	ASTM-A519	/CD1137////			1.0000	
13-22-15	ADAPTER (STEEL) (ALT)	Part	ASTM-A108	/CF1117////			1.0000	
13-22-15	ADAPTER (STEEL) (ALT)	Part	ASTM-A108	/CF1141////			1.0000	
13-19-57	TOP (STEEL) (ALT)	Part	ASTM-A621	/HRDQ////			1.0000	
13-19-57	TOP (STEEL) (ALT)	Part	ASTM-A619	/CRDQ////			1.0000	
13-19-57	TOP (STEEL) (ALT)	Part	ASTM-A622	/HRDQ////			1.0000	
13-19-136	TOP (STEEL) (ALT)	Part	ASTM-A308				1.0000	
13-19-94	STARTER CUP ASSY	Component					1.0000	
13-19-97	CUP (ZN)	Part	QQ-Z-301	/1////			1.0000	
13-19-95	SLUG (STARTER MIX)	Part			19.0000	GM	1.0000	0.04189500
	SI (26.00%)	Compound	MIL-S-230	//2/C//				
	K NITRATE (35.00%)	Compound	MIL-P-156	///1//				
	CHARCOAL (4.00%)	Compound	JAN-C-178	///D//				
	FE OXIDE (22.00%)	Compound	MIL-I-275	///C//				
	AL PWDR (13.00%)	Compound	MIL-A-512	/2/C/A//				
13-10-22	FUZE HAND GREN M201A1	Component	MIL-F-10080		0.1600	LB	1.0000	
13-10-57	BODY FUZE (ZN ALLOY)	Part	QQ-Z-363		24.5000	GM	1.0000	0.05402300
13-10-12	PIN SAFETY (STEEL)	Part	MS24665-212		8.0000	GM	1.0000	0.01764000
13-10-12	PIN SAFETY (STEEL WIRE) (ALT)	Part	QQ-W-461	////FIN. 1/	8.0000	GM	1.0000	
13-10-12	PIN SAFETY (STEEL WIRE) (ALT)	Part	QQ-W-461	////FIN. 5/	8.0000	GM	1.0000	

USADACS - MIDAS DETAILED STRUCTURE FOR A MUNITION (LESS BULK ITEMS)

06/09/97

Nomenclature: GREN HAND SMK HC AN-M8

NSN: 1330002198511 DODIC: G930 Reported Weight: 1.0000 LB

DRAWING #	NOMENCLATURE	TYPE	SPECIFICATION	TGCS	-- REPORTED --- WEIGHT	UNIT	FACTOR	FACTORED WEIGHT(LB)
13-10-19	GASKET (ASBESTOS)	Part	HH-P-46	///1//			1.0000	
13-10-10	PIN HINGE (STEEL)	Part	ASTM-A108	//1020///			1.0000	
13-10-9	RING PULL (STEEL WIRE)	Part	QQ-W-461	//1020///			1.0000	
13-10-8	SPRING (STEEL WIRE)	Part	QQ-W-470				1.0000	
13-10-5	LEVER (STEEL)	Part	ASTM-A621		10.0000	GM	1.0000	0.02205000
13-10-56	CTG DELAY ASSY	Component					1.0000	
13-10-54	CASE (AL ALLOY)	Part	QQ-A-225/7				1.0000	
13-10-54	CASE (AL ALLOY) (ALT)	Part	QQ-A-250/8				1.0000	
13-10-55	IGN COMPOSITION (MIX KCLO4 30.0%)	Part			15.0000	MG	1.0000	0.00003300
	TI TECHNICAL (69.50%)	Compound	MIL-T-13405	/1////				
	K PERCHLORATE (29.50%)	Compound	MIL-P-217	//A/4//				
	VINYL ALCOHOL (0.50%)	Compound	MIL-V-50433					
	ACETONE (0.50%)	Compound	O-A-51					
	PEP (MIXTURE ZR PWDR 65.0%)	Part	MIL-P-22264		30.0000	MG	1.0000	0.00006600
	ZR PWDR (65.00%)	Compound	MIL-Z-399	/2//1//				
	FE OXIDE (25.00%)	Compound	MIL-I-706	/1//2//				
	DIATOMACEOUS EARTH (10.00%)	Compound	MIL-D-20550					
	PEP (DELAY COMP MIX)	Part	MIL-M-21383		600.0000	MG	1.0000	0.00132300
	MN PWDR (42.00%)	Compound	JAN-M-476	//1///				
	BA CHROMATE (5.00%)	Compound	MIL-B-550	//A///				
	PB CHROMATE (53.00%)	Compound	JAN-L-488					
8798919	PRIMER PERC M39A1 ASSY	Component	MIL-P-12951				1.0000	
8798921	BODY (CU ALLOY)	Part	MIL-C-50				1.0000	
8798923	DISC (PAPER SEALING)	Part	MIL-P-60169	/2////			1.0000	
8798920	ANVIL (CU ALLOY)	Part	MIL-C-50				1.0000	
8798922	CUP (CU ALLOY)	Part	MIL-C-21768				1.0000	
	PEP (PRIMER MIX)	Part	9278188		0.4000	GR	1.0000	0.00005700
	K CHLORATE (37.05%)	Compound	MIL-P-150	//A/2//				
	PB THIOCYANATE (38.13%)	Compound	JAN-L-65					
	TNT (5.69%)	Compound	MIL-T-248	/1////				
	BA NITRATE (8.68%)	Compound	MIL-B-162					
	GROUND GLASS (10.45%)	Compound	JAN-G-479					
13-10-13	STRIKER ASSY	Component					1.0000	
13-10-15	STRIKER POINT (STEEL)	Part	ASTM-A576	//1020///			1.0000	
13-10-15	STRIKER POINT (STEEL) (ALT)	Part	ASTM-A108	//1117///			1.0000	
13-10-14	STRIKER (STEEL)	Part	ASTM-A621				1.0000	
13-10-14	STRIKER (STEEL) (ALT)	Part	ASTM-A619				1.0000	
								1.19548700

MIDAS: Detailed Structure G932

Nomenclature: GREN HAND SMK RED M48 W/M227 FUZE
NSN: 1330004776719
DODIC: G932
Drawing #: 13-25-71
Family: CS
Reported weight: 1.1875 LB
Specification: MIL-G-51374
Remarks:

#	Type	Drawing#	Nomenclature	Weight
*1	*Munition	*13-25-71	GREN HAND SMK RED M48 W/M227 FUZE	*1.19 LB
*2	*Part	*	--RED SMK MIX (RED SMK MIX)	165.00 GM
*3	*Compound	*	----DYE RED (63.60%)	
*4	*Compound	*	----K CHLORATE (24.70%)	
*5	*Compound	*	----LACTOSE (9.70%)	
*6	*Compound	*	----NC (2.00%)	
*7	*Part	*13-25-73	--FUZE WELL (POLYETHYLENE PLASTIC)	*0.00 LB
*8	*Bulk item	*	----ADHESIVE 3M	
*9	*Bulk item	*	----ADHESIVE 3M (ALT)	
*10	*Part	*13-25-76	--PLUG (PLASTIC)	*0.00
*11	*Bulk item	*	----ADHESIVE 3M	
*12	*Bulk item	*	----ADHESIVE 3M (ALT)	
*13	*Part	*13-25-72-3	--TAPE (VINYL PLASTIC)	*0.00
*14	*Component	*13-25-72	--GREN BODY ASSY	*0.00
*15	*Component	*13-25-77	----UPPER BODY ASSY	*0.00
*16	*Part	*13-25-79	------FUZE INSERT (AL ALLOY)	*0.00 LB
*17	*Part	*13-25-79	------FUZE INSERT (AL ALLOY) (ALT)	*0.00
*18	*Part	*13-25-77-1	------UPPER BODY (BUTYL RUBBER)	*0.00
*19	*Component	*13-25-78	----LOWER BODY ASSY	*0.00
*20	*Part	*13-25-80	------FILLING INSERT (AL ALLOY)	*0.00 LB
*21	*Part	*13-25-80	------FILLING INSERT (AL ALLOY) (ALT)	*0.00
*22	*Part	*13-25-78-1	------LOWER BODY (BUTYL RUBBER)	*0.00
*23	*Component	*13-10-40	--FUZE HAND GREN M227	*0.00
*24	*Part	*13-10-41	----FUZE BODY (AL ALLOY)	*24.50 GM
*25	*Bulk item	*	------GREASE	
*26	*Bulk item	*	------PETTMAN CEMENT	
*27	*Bulk item	*	------ANODIC COATING	
*28	*Part	*13-10-41	----FUZE BODY (AL ALLOY) (ALT)	*24.50 GM
*29	*Bulk item	*	------GREASE	
*30	*Bulk item	*	------ANODIC COATING	

*31	*Bulk item	*	------ANODIC COATING (ALT)	
*32	*Bulk item	*	------PETTMAN CEMENT	
*33	*Part	*13-10-41	----FUZE BODY (AL ALLOY) (ALT)	*24.50 GM
*34	*Bulk item	*	------GREASE	
*35	*Bulk item	*	------PETTMAN CEMENT	
*36	*Bulk item	*	------ANODIC COATING	
*37	*Bulk item	*	------ANODIC COATING (ALT)	
*38	*Part	*13-10-42	----HANDLE (STEEL)	*0.00
*39	*Bulk item	*	------ZN CHROMATE	
*40	*Bulk item	*	------STENCIL INK	
*41	*Part	*13-10-43	----FIRING PIN (STAINLESS STEEL)	*0.00
*42	*Part	*13-10-45	----ARMING PIN (AL ALLOY)	*0.00
*43	*Bulk item	*	------ANODIC COATING	
*44	*Bulk item	*	------ANODIC COATING (ALT)	
*45	*Bulk item	*	------CHROMATE COATING (ALT)	
*46	*Part	*13-10-46	----SAFETY LATCH (STEEL)	*0.00
*47	*Bulk item	*	------ZN CHROMATE	
*48	*Part	*13-10-48	----ARMING PIN SPRING (STEEL WIRE)	*0.00
*49	*Bulk item	*	------NI PLATING	
*50	*Part	*13-10-49	----FIRING PIN SPRING (STEEL WIRE)	*0.00
*51	*Bulk item	*	------NI PLATING	
*52	*Part	*13-10-52	----SAFETY LATCH SPRING (STEEL)	*0.00
*53	*Bulk item	*	------ZN PLATED	
*54	*Part	*13-10-9	----RING PULL (STEEL WIRE)	*0.00
*55	*Bulk item	*	------ZN CHROMATE	
*56	*Part	*13-10-9	----RING PULL (STEEL WIRE) (ALT)	*0.00
*57	*Bulk item	*	------ZN CHROMATE	
*58	*Part	MS24665-138	----PIN COTTER (STEEL)	*0.00
*59	*Bulk item	*	------CD CHROMATE	
*60	*Bulk item	*	------PHOSPHATE COATING (ALT)	
*61	*Part	MS29513-008	----O-RING (TEFLON)	*0.00
*62	*Bulk item	*	------GREASE	
*63	*Part	*13-10-43	----FIRING PIN (STAINLESS STEEL) (ALT)	*0.00
*64	*Part	*13-10-43	----FIRING PIN (STAINLESS STEEL) (ALT)	*0.00
*65	*Part	MS16562-103	----PIN SPRING (STEEL)	*0.00 LB
*66	*Bulk item	*	------CD CHROMATE	
*67	*Bulk item	*	------PHOSPHATE COATING (ALT)	
*68	*Part	MS20427-2C3	----RIVET (STEEL)	*0.00
*69	*Bulk item	*	------CD CHROMATE	
*70	*Bulk item	*	------BLACK OXIDE COATING (ALT)	

*71	*Part	*151-1-22	----WASHER FLAT (STEEL)	*0.00
*72	*Bulk item	*	------CD CHROMATE	
*73	*Component	*13-10-35	----CHG ASSY	*0.00
*74	*Part	*13-10-44	------CHG BODY (AL ALLOY)	*0.00
*75	*Bulk item	*	--------ANODIC COATING	
*76	*Bulk item	*	--------ANODIC COATING (ALT)	
*77	*Bulk item	*	--------CHROMATE COATING (ALT)	
*78	*Part	*	------FIRST FIRE MIX 10 (FIRST FIRE MIX 10)	*0.35 GM
*79	*Compound	*	--------SI (25.00%)	
*80	*Compound	*	--------PB RED (50.00%)	
*81	*Compound	*	--------TI PWDR (25.00%)	
*82	*Part	*	------IGN MIX 3 (IGN MIX 3)	*0.30 GM
*83	*Compound	*	--------FE OXIDE (49.10%)	
*84	*Compound	*	--------TI PWDR (31.91%)	
*85	*Compound	*	--------ZR (17.19%)	
*86	*Compound	*	--------NC (1.80%)	
*87	*Part	*	------DELAY MIX 5 (DELAY MIX 5)	*1.60 GM
*88	*Compound	*	--------SI (20.00%)	
*89	*Compound	*	--------PB RED (80.00%)	
90	*Part	*13-10-35-1	------DISC (AL FOIL)	*0.00
*91	*Bulk item	*	--------SHELLAC	
*92	*Bulk item	*	--------ANODIC COATING (ALT)	
93	*Bulk item	*	--------CHROMATE COATING (ALT)	
*94	*Component	*13-10-39	------PRIMER STAB M118 ASSY	*0.00
*95	*Part	*8798332	--------CUP DETONATOR (AL ALLOY)	*0.04 GM
*96	*Part	*8798333	--------DISC CLOSING (AL FOIL)	*0.00
*97	*Bulk item	*	----------LACQUER CELL NITRATE	
*98	*Part	*8798333	--------DISC CLOSING (AL ALLOY) (ALT)	*0.00 GM
*99	*Bulk item	*	----------LACQUER CELL NITRATE	
*100	*Part	*	PRIMER MIX NOL#60 (PRIMER MIX NOL #60)	*0.11 GM
*101	*Compound	*	----------PB STYPHNATE (60.00%)	
*102	*Compound	*	----------TETRACENE (5.00%)	
*103	*Compound	*	----------SB SULFIDE (10.00%)	
*104	*Compound	*	----------BA NITRATE (25.00%)	

USADACS - MIDAS DETAILED STRUCTURE FOR A MUNITION (LESS BULK ITEMS)

06/09/97

Nomenclature: GREN HAND SMK GRN M18

NSN: 1330002896851 DODIC: G940 Reported Weight: 19.0000 OZ (1.1875 LB)

DRAWING #	NOMENCLATURE	TYPE	SPECIFICATION	TGCS	-- REPORTED --- WEIGHT	UNIT	FACTOR	FACTORED WEIGHT(LB)
13-19-37	GREN HAND SMK GRN M18	Munition	MIL-G-12326		19.0000	OZ	1.0000	
143-2-9	GRN SMOKE VII (SMK MIX GRN)	Part			11.5000	OZ	1.0000	0.71875000
	DYE GREEN (42.00%)	Compound	MIL-D-3277					
	NA BICARBONATE (24.00%)	Compound	O-S-576					
	K CHLORATE (25.00%)	Compound	MIL-P-150	//B/7//				
	S (9.00%)	Compound	MIL-S-487	//E///				
13-19-82	BODY ASSY	Component					1.0000	
13-19-81	BOTTOM GREN BODY (SN PLATE)	Part	MIL-S-10104	/6////			1.0000	
13-19-81	BOTTOM GREN BODY (SN PLATE) (ALT)	Part	QQ-T-425	/1/4/75//			1.0000	
13-19-81	BOTTOM GREN BODY (STEEL) (ALT)	Part	ASTM-A308	/1/A///			1.0000	
13-19-82-1	BODY (SN PLATE) (ALT)	Part	MIL-S-10104	/7////			1.0000	
13-19-82-1	BODY (SN PLATE)	Part	MIL-S-10104	/6////			1.0000	
13-19-82-1	BODY (SN PLATE) (ALT)	Part	QQ-T-425	/1/4/75//			1.0000	
13-19-82-1	BODY (STEEL) (ALT)	Part	ASTM-A308	/1/A///			1.0000	
13-19-81	BOTTOM GREN BODY (SN PLATE) (ALT)	Part	MIL-S-10104	/7////			1.0000	
13-19-70	TOP ASSY	Component					1.0000	
13-19-78	ADAPTER (BRS)	Part	QQ-B-626	////COMP 11/			1.0000	
13-19-71	TOP GREN (SN PLATE)	Part	MIL-S-10104	/6////			1.0000	
13-19-71	TOP GREN BODY (SN PLATE) (ALT)	Part	QQ-T-425	/1/4/75//			1.0000	
13-19-71	TOP GREN BODY (STEEL) (ALT)	Part	ASTM-A308	/1/A///			1.0000	
13-19-71	TOP GREN (SN PLATE) (ALT)	Part	MIL-S-10104	/7////			1.0000	
13-19-72	TOP ASSY (ALT)	Component					1.0000	
13-19-74	ADAPTER (STEEL)	Part	ASTM-A519				1.0000	
13-19-74	ADAPTER (STEEL) (ALT)	Part	ASTM-A108				1.0000	
13-19-69	TOP GREN (STEEL)	Part	ASTM-A621				1.0000	
13-19-69	TOP GREN (STEEL) (ALT)	Part	ASTM-A619				1.0000	
13-19-69	TOP GREN (STEEL) (ALT)	Part	ASTM-A622				1.0000	
13-19-285	EXPULSION-IGN STARTER ASSY	Component					1.0000	
13-19-281	EXPULSION-IGN CUP (POLYETHYLENE PLASTIC)	Part	L-P-390				1.0000	
13-19-282	STARTER CUP DISC (CHIPBOARD)	Part	UU-C-282	/1/3/H//			1.0000	
13-19-284	STARTER MIXTURE (MIX KNO3 49.1%)	Part			7.0000	GM	1.0000	0.01543500
	SI (36.40%)	Compound	MIL-S-230	//2/C//				
	K NITRATE (49.10%)	Compound	MIL-P-156	///1//				
	CHARCOAL (5.50%)	Compound	JAN-C-178	///D//				
	STEARIC ACID (5.00%)	Compound	MIL-S-271	//TECH.///				
	NC (4.00%)	Compound	MIL-N-244	//D///				
143-7-3	STARTER MIXTURE (MIX KCLO3 25.9%) (ALT)	Part			190.0000	GR	1.0000	
	K CHLORATE (25.90%)	Compound	MIL-P-150	//B/7//				
	S (10.10%)	Compound	MIL-S-478	//E///				
	NA BICARBONATE (18.00%)	Compound	O-S-576					
	CORN STARCH (6.00%)	Compound	N-C-541	//D///				
	NC (1.60%)	Compound	MIL-N-244					
	ACETONE (38.40%)	Compound	O-A-51					
13-10-22	FUZE HAND GREN M201A1	Component	MIL-F-10080		0.1600	LB	1.0000	
13-10-57	BODY FUZE (ZN ALLOY)	Part	QQ-Z-363		24.5000	GM	1.0000	0.05402300
13-10-12	PIN SAFETY (STEEL)	Part	MS24665-212		8.0000	GM	1.0000	0.01764000
13-10-12	PIN SAFETY (STEEL WIRE) (ALT)	Part	QQ-W-461	////FIN. 1/	8.0000	GM	1.0000	
13-10-12	PIN SAFETY (STEEL WIRE) (ALT)	Part	QQ-W-461	////FIN. 5/	8.0000	GM	1.0000	
13-10-19	GASKET (ASBESTOS)	Part	HH-P-46	///1//			1.0000	
13-10-10	PIN HINGE (STEEL)	Part	ASTM-A108	//1020///			1.0000	
13-10-9	RING PULL (STEEL WIRE)	Part	QQ-W-461	//1020///			1.0000	
13-10-8	SPRING (STEEL WIRE)	Part	QQ-W-470				1.0000	

USADACS - MIDAS DETAILED STRUCTURE FOR A MUNITION (LESS BULK ITEMS)

Nomenclature: GREN HAND SMK GRN M18
NSN: 1330002896851 DODIC: G940 Reported Weight: 19.0000 OZ (1.1875 LB)

DRAWING #	NOMENCLATURE	TYPE	SPECIFICATION	TGCS	-- REPORTED --- WEIGHT	UNIT	FACTOR	FACTORED WEIGHT(LB)
13-10-5	LEVER (STEEL)	Part	ASTM-A621		10.0000	GM	1.0000	0.02205000
13-10-56	CTG DELAY ASSY	Component					1.0000	
13-10-54	CASE (AL ALLOY)	Part	QQ-A-225/7				1.0000	
13-10-54	CASE (AL ALLOY) (ALT)	Part	QQ-A-250/8				1.0000	
13-10-55	IGN COMPOSITION (MIX KCLO4 30.0%)	Part			15.0000	MG	1.0000	0.00003300
	TI TECHNICAL (69.50%)	Compound	MIL-T-13405	/1////				
	K PERCHLORATE (29.50%)	Compound	MIL-P-217	//A/4//				
	VINYL ALCOHOL (0.50%)	Compound	MIL-V-50433					
	ACETONE (0.50%)	Compound	O-A-51					
	PEP (MIXTURE ZR PWDR 65.0%)	Part	MIL-P-22264		30.0000	MG	1.0000	0.00006600
	ZR PWDR (65.00%)	Compound	MIL-Z-399	/2//1//				
	FE OXIDE (25.00%)	Compound	MIL-I-706	/1//2//				
	DIATOMACEOUS EARTH (10.00%)	Compound	MIL-D-20550					
	PEP (DELAY COMP MIX)	Part	MIL-M-21383		600.0000	MG	1.0000	0.00132300
	MN PWDR (42.00%)	Compound	JAN-M-476	//1///				
	BA CHROMATE (5.00%)	Compound	MIL-B-550	//A///				
	PB CHROMATE (53.00%)	Compound	JAN-L-488					
8798919	PRIMER PERC M39A1 ASSY	Component	MIL-P-12951				1.0000	
8798921	BODY (CU ALLOY)	Part	MIL-C-50				1.0000	
8798923	DISC (PAPER SEALING)	Part	MIL-P-60169	/2////			1.0000	
8798920	ANVIL (CU ALLOY)	Part	MIL-C-50				1.0000	
8798922	CUP (CU ALLOY)	Part	MIL-C-21768				1.0000	
	PEP (PRIMER MIX)	Part	9278188		0.4000	GR	1.0000	0.00005700
	K CHLORATE (37.05%)	Compound	MIL-P-150	//A/2//				
	PB THIOCYANATE (38.13%)	Compound	JAN-L-65					
	TNT (5.69%)	Compound	MIL-T-248	/1////				
	BA NITRATE (8.68%)	Compound	MIL-B-162					
	GROUND GLASS (10.45%)	Compound	JAN-G-479					
13-10-13	STRIKER ASSY	Component					1.0000	
13-10-15	STRIKER POINT (STEEL)	Part	ASTM-A576	//1020///			1.0000	
13-10-15	STRIKER POINT (STEEL) (ALT)	Part	ASTM-A108	//1117///			1.0000	
13-10-14	STRIKER (STEEL)	Part	ASTM-A621				1.0000	
13-10-14	STRIKER (STEEL) (ALT)	Part	ASTM-A619				1.0000	
4116-65	PKG FOR NSN 1330002896851	Component					1.0000	
4116/65	PALLET 40" X 48" (WOOD)	Part	MIL-P-15011	/I//1/I/	80.0000	LB		
13-9-120	PACKING ASSY GREN	Component					1.0000	
13-9-119	CNTR (CHIPBOARD)	Part	UU-C-282	/3//1//	5.7500	OZ	1.0000	0.35937500
13-19-143	SPACER (FIBERBOARD)	Part	PPP-F-320	/SF/W6S///			1.0000	
13-9-118	COLLAR FUZE PROTECTOR (FIBER CNTR)	Part	MIL-C-2439	/COMM.///	9.0000	GM	1.0000	0.01984500
13-9-105	CONTINUOUS LABEL (TAPE VINYL PLASTIC)	Part	PPP-T-66	/2////			1.0000	
13-9-120*1	TAPE (PLASTIC FILM TAPE)	Part	MIL-T-43036	/1////			1.0000	
13-9-102	BOX PACKING ASSY	Component						
13-9-102*2	FILLER (FIBERBOARD)	Part	PPP-B-636	/1//2//			1.0000	
13-9-102*1	BOX PACKING (WOOD)	Part	PPP-B-621	/2//4/4/	5.0000	LB	1.0000	
								1.20859700

USADACS - MIDAS DETAILED STRUCTURE FOR A MUNITION (LESS BULK ITEMS)

06/09/97

Nomenclature: GREN HAND SMK YLW M18

NSN: 1330002896854 DODIC: G945 Reported Weight: 19.0000 OZ (1.1875 LB)

DRAWING #	NOMENCLATURE	TYPE	SPECIFICATION	TGCS	-- REPORTED --- WEIGHT	UNIT	FACTOR	FACTORED WEIGHT(LB)
13-19-37	GREN HAND SMK YLW M18	Munition	MIL-G-12326		19.0000	OZ	1.0000	
143-4-10	YLW SMK XII (SMK MIX YLW)	Part			11.5000	OZ	1.0000	0.71875000
	DYE YLW (42.00%)	Compound	DOD-D-51485					
	NA BICARBONATE (24.00%)	Compound	O-S-576					
	K CHLORATE (25.00%)	Compound	MIL-P-150	//B/7//				
	S (9.00%)	Compound	MIL-S-487	//E///				
13-19-82	BODY ASSY	Component					1.0000	
13-19-81	BOTTOM GREN BODY (SN PLATE)	Part	MIL-S-10104	/6////			1.0000	
13-19-81	BOTTOM GREN BODY (SN PLATE) (ALT)	Part	QQ-T-425	/1/4/75//			1.0000	
13-19-81	BOTTOM GREN BODY (STEEL) (ALT)	Part	ASTM-A308	/1/A///			1.0000	
13-19-82-1	BODY (SN PLATE) (ALT)	Part	MIL-S-10104	/7////			1.0000	
13-19-82-1	BODY (SN PLATE)	Part	MIL-S-10104	/6////			1.0000	
13-19-82-1	BODY (SN PLATE) (ALT)	Part	QQ-T-425	/1/4/75//			1.0000	
13-19-82-1	BODY (STEEL) (ALT)	Part	ASTM-A308	/1/A///			1.0000	
13-19-81	BOTTOM GREN BODY (SN PLATE) (ALT)	Part	MIL-S-10104	/7////			1.0000	
13-19-70	TOP ASSY	Component					1.0000	
13-19-78	ADAPTER (BRS)	Part	QQ-B-626	////COMP 11/			1.0000	
13-19-71	TOP GREN (SN PLATE)	Part	MIL-S-10104	/6////			1.0000	
13-19-71	TOP GREN BODY (SN PLATE) (ALT)	Part	QQ-T-425	/1/4/75//			1.0000	
13-19-71	TOP GREN BODY (STEEL) (ALT)	Part	ASTM-A308	/1/A///			1.0000	
13-19-71	TOP GREN (SN PLATE) (ALT)	Part	MIL-S-10104	/7////			1.0000	
13-19-72	TOP ASSY (ALT)	Component					1.0000	
13-19-74	ADAPTER (STEEL)	Part	ASTM-A519				1.0000	
13-19-74	ADAPTER (STEEL) (ALT)	Part	ASTM-A108				1.0000	
13-19-69	TOP GREN (STEEL)	Part	ASTM-A621				1.0000	
13-19-69	TOP GREN (STEEL) (ALT)	Part	ASTM-A619				1.0000	
13-19-69	TOP GREN (STEEL) (ALT)	Part	ASTM-A622				1.0000	
13-19-285	EXPULSION-IGN STARTER ASSY	Component					1.0000	
13-19-281	EXPULSION-IGN CUP (POLYETHYLENE PLASTIC)	Part	L-P-390				1.0000	
13-19-282	STARTER CUP DISC (CHIPBOARD)	Part	UU-C-282	/1/3/H//			1.0000	
13-19-284	STARTER MIXTURE (MIX KNO3 49.1%)	Part			7.0000	GM	1.0000	0.01543500
	SI (36.40%)	Compound	MIL-S-230	//2/C//				
	K NITRATE (49.10%)	Compound	MIL-P-156	///1//				
	CHARCOAL (5.50%)	Compound	JAN-C-178	///D//				
	STEARIC ACID (5.00%)	Compound	MIL-S-271	//TECH.///				
	NC (4.00%)	Compound	MIL-N-244	//D///				
143-7-3	STARTER MIXTURE (MIX KCLO3 25.9%) (ALT)	Part			190.0000	GR	1.0000	
	K CHLORATE (25.90%)	Compound	MIL-P-150	//B/7//				
	S (10.10%)	Compound	MIL-S-478	//E///				
	NA BICARBONATE (18.00%)	Compound	O-S-576					
	CORN STARCH (6.00%)	Compound	N-C-541	//D///				
	NC (1.60%)	Compound	MIL-N-244					
	ACETONE (38.40%)	Compound	O-A-51					
13-10-22	FUZE HAND GREN M201A1	Component	MIL-F-10080		0.1600	LB	1.0000	
13-10-57	BODY FUZE (ZN ALLOY)	Part	QQ-Z-363		24.5000	GM	1.0000	0.05402300
13-10-12	PIN SAFETY (STEEL)	Part	MS24665-212		8.0000	GM	1.0000	0.01764000
13-10-12	PIN SAFETY (STEEL WIRE) (ALT)	Part	QQ-W-461	////FIN. 1/	8.0000	GM	1.0000	
13-10-12	PIN SAFETY (STEEL WIRE) (ALT)	Part	QQ-W-461	////FIN. 5/	8.0000	GM	1.0000	
13-10-19	GASKET (ASBESTOS)	Part	HH-P-46	///1//			1.0000	
13-10-10	PIN HINGE (STEEL)	Part	ASTM-A108	//1020///			1.0000	
13-10-9	RING PULL (STEEL WIRE)	Part	QQ-W-461	//1020///			1.0000	
13-10-8	SPRING (STEEL WIRE)	Part	QQ-W-470				1.0000	

USADACS - MIDAS DETAILED STRUCTURE FOR A MUNITION (LESS BULK ITEMS)

Nomenclature: GREN HAND SMK YLW M18
NSN: 1330002896854 DODIC: G945 Reported Weight: 19.0000 OZ (1.1875 LB)

DRAWING #	NOMENCLATURE	TYPE	SPECIFICATION	TGCS	-- REPORTED --- WEIGHT	UNIT	FACTOR	FACTORED WEIGHT(LB)
13-10-5	LEVER (STEEL)	Part	ASTM-A621		10.0000	GM	1.0000	0.02205000
13-10-56	CTG DELAY ASSY	Component					1.0000	
13-10-54	CASE (AL ALLOY)	Part	QQ-A-225/7				1.0000	
13-10-54	CASE (AL ALLOY) (ALT)	Part	QQ-A-250/8				1.0000	
13-10-55	IGN COMPOSITION (MIX KCLO4 30.0%)	Part			15.0000	MG	1.0000	0.00003300
	TI TECHNICAL (69.50%)	Compound	MIL-T-13405	/1////				
	K PERCHLORATE (29.50%)	Compound	MIL-P-217	//A/4//				
	VINYL ALCOHOL (0.50%)	Compound	MIL-V-50433					
	ACETONE (0.50%)	Compound	O-A-51					
	PEP (MIXTURE ZR PWDR 65.0%)	Part	MIL-P-22264		30.0000	MG	1.0000	0.00006600
	ZR PWDR (65.00%)	Compound	MIL-Z-399	/2//1//				
	FE OXIDE (25.00%)	Compound	MIL-I-706	/1//2//				
	DIATOMACEOUS EARTH (10.00%)	Compound	MIL-D-20550					
	PEP (DELAY COMP MIX)	Part	MIL-M-21383		600.0000	MG	1.0000	0.00132300
	MN PWDR (42.00%)	Compound	JAN-M-476	//1///				
	BA CHROMATE (5.00%)	Compound	MIL-B-550	//A///				
	PB CHROMATE (53.00%)	Compound	JAN-L-488					
8798919	PRIMER PERC M39A1 ASSY	Component	MIL-P-12951				1.0000	
8798921	BODY (CU ALLOY)	Part	MIL-C-50				1.0000	
8798923	DISC (PAPER SEALING)	Part	MIL-P-60169	/2////			1.0000	
8798920	ANVIL (CU ALLOY)	Part	MIL-C-50				1.0000	
8798922	CUP (CU ALLOY)	Part	MIL-C-21768				1.0000	
	PEP (PRIMER MIX)	Part	9278188		0.4000	GR	1.0000	0.00005700
	K CHLORATE (37.05%)	Compound	MIL-P-150	//A/2//				
	PB THIOCYANATE (38.13%)	Compound	JAN-L-65					
	TNT (5.69%)	Compound	MIL-T-248	/1////				
	BA NITRATE (8.68%)	Compound	MIL-B-162					
	GROUND GLASS (10.45%)	Compound	JAN-G-479					
13-10-13	STRIKER ASSY	Component					1.0000	
13-10-15	STRIKER POINT (STEEL)	Part	ASTM-A576	//1020///			1.0000	
13-10-15	STRIKER POINT (STEEL) (ALT)	Part	ASTM-A108	//1117///			1.0000	
13-10-14	STRIKER (STEEL)	Part	ASTM-A621				1.0000	
13-10-14	STRIKER (STEEL) (ALT)	Part	ASTM-A619				1.0000	
4116-65	PKG FOR NSN 1330002896854	Component					1.0000	
4116/65	PALLET 40" X 48" (WOOD)	Part	MIL-P-15011	/I//1/I/	80.0000	LB	0.0010	0.08000000
13-9-102	BOX PACKING ASSY	Component					0.0620	
13-9-102*2	FILLER (FIBERBOARD)	Part	PPP-B-636	/1//2//			1.0000	
13-9-102*1	BOX PACKING (WOOD)	Part	PPP-B-621	/2//4/4/	5.0000	LB	1.0000	0.31000000
13-9-120	PACKING ASSY GREN	Component					1.0000	
13-9-119	CNTR (CHIPBOARD)	Part	UU-C-282	/3//1//	5.7500	OZ	1.0000	0.35937500
13-19-143	SPACER (FIBERBOARD)	Part	PPP-F-320	/SF/W6S///			1.0000	
13-9-118	COLLAR FUZE PROTECTOR (FIBER CNTR)	Part	MIL-C-2439	/COMM.////	9.0000	GM	1.0000	0.01984500
13-9-105	CONTINUOUS LABEL (TAPE VINYL PLASTIC)	Part	PPP-T-66	/2////			1.0000	
13-9-120*1	TAPE (PLASTIC FILM TAPE)	Part	MIL-T-43036	/1////			1.0000	
								1.59859700

USADACS - MIDAS DETAILED STRUCTURE FOR A MUNITION (LESS BULK ITEMS)

06/09/97

Nomenclature: GREN HAND SMK RED M18

NSN: 1330002896852 DODIC: G950 Reported Weight: 19.0000 OZ (1.1875 LB)

DRAWING #	NOMENCLATURE	TYPE	SPECIFICATION	TGCS	-- REPORTED --- WEIGHT	UNIT	FACTOR	FACTORED WEIGHT(LB)
13-19-37	GREN HAND SMK RED M18	Munition	MIL-G-12326		19.0000	OZ	1.0000	
143-3-1	RED SMK III (SMK MIX RED)	Part			11.5000	OZ	1.0000	0.71875000
	DYE RED (42.00%)	Compound	MIL-D-3718					
	NA BICARBONATE (24.00%)	Compound	O-S-576					
	K CHLORATE (25.00%)	Compound	MIL-P-150	//B/7//				
	S (9.00%)	Compound	MIL-S-14929	//E///				
13-19-82	BODY ASSY	Component					1.0000	
13-19-81	BOTTOM GREN BODY (SN PLATE)	Part	MIL-S-10104	/6////			1.0000	
13-19-81	BOTTOM GREN BODY (SN PLATE) (ALT)	Part	QQ-T-425	/1/4/75//			1.0000	
13-19-81	BOTTOM GREN BODY (STEEL) (ALT)	Part	ASTM-A308	/1/A///			1.0000	
13-19-82-1	BODY (SN PLATE) (ALT)	Part	MIL-S-10104	/7////			1.0000	
13-19-82-1	BODY (SN PLATE)	Part	MIL-S-10104	/6////			1.0000	
13-19-82-1	BODY (SN PLATE) (ALT)	Part	QQ-T-425	/1/4/75//			1.0000	
13-19-82-1	BODY (STEEL) (ALT)	Part	ASTM-A308	/1/A///			1.0000	
13-19-81	BOTTOM GREN BODY (SN PLATE) (ALT)	Part	MIL-S-10104	/7////			1.0000	
13-19-70	TOP ASSY	Component					1.0000	
13-19-78	ADAPTER (BRS)	Part	QQ-B-626	////COMP 11/			1.0000	
13-19-71	TOP GREN (SN PLATE)	Part	MIL-S-10104	/6////			1.0000	
13-19-71	TOP GREN BODY (SN PLATE) (ALT)	Part	QQ-T-425	/1/4/75//			1.0000	
13-19-71	TOP GREN BODY (STEEL) (ALT)	Part	ASTM-A308	/1/A///			1.0000	
13-19-71	TOP GREN (SN PLATE) (ALT)	Part	MIL-S-10104	/7////			1.0000	
13-19-72	TOP ASSY (ALT)	Component					1.0000	
13-19-74	ADAPTER (STEEL)	Part	ASTM-A519				1.0000	
13-19-74	ADAPTER (STEEL) (ALT)	Part	ASTM-A108				1.0000	
13-19-69	TOP GREN (STEEL)	Part	ASTM-A621				1.0000	
13-19-69	TOP GREN (STEEL) (ALT)	Part	ASTM-A619				1.0000	
13-19-69	TOP GREN (STEEL) (ALT)	Part	ASTM-A622				1.0000	
13-19-285	EXPULSION-IGN STARTER ASSY	Component					1.0000	
13-19-281	EXPULSION-IGN CUP (POLYETHYLENE PLASTIC)	Part	L-P-390				1.0000	
13-19-282	STARTER CUP DISC (CHIPBOARD)	Part	UU-C-282	/1/3/H//			1.0000	
13-19-284	STARTER MIXTURE (MIX KNO3 49.1%)	Part			7.0000	GM	1.0000	0.01543500
	SI (36.40%)	Compound	MIL-S-230	//2/C//				
	K NITRATE (49.10%)	Compound	MIL-P-156	///1//				
	CHARCOAL (5.50%)	Compound	JAN-C-178	///D//				
	STEARIC ACID (5.00%)	Compound	MIL-S-271	//TECH.///				
	NC (4.00%)	Compound	MIL-N-244	//D///				
143-7-3	STARTER MIXTURE (MIX KCLO3 25.9%) (ALT)	Part			190.0000	GR	1.0000	
	K CHLORATE (25.90%)	Compound	MIL-P-150	//B/7//				
	S (10.10%)	Compound	MIL-S-478	//E///				
	NA BICARBONATE (18.00%)	Compound	O-S-576					
	CORN STARCH (6.00%)	Compound	N-C-541	//D///				
	NC (1.60%)	Compound	MIL-N-244					
	ACETONE (38.40%)	Compound	O-A-51					
13-10-22	FUZE HAND GREN M201A1	Component	MIL-F-10080		0.1600	LB	1.0000	
13-10-57	BODY FUZE (ZN ALLOY)	Part	QQ-Z-363		24.5000	GM	1.0000	0.05402300
13-10-12	PIN SAFETY (STEEL)	Part	MS24665-212		8.0000	GM	1.0000	0.01764000
13-10-12	PIN SAFETY (STEEL WIRE) (ALT)	Part	QQ-W-461	////FIN. 1/	8.0000	GM	1.0000	
13-10-12	PIN SAFETY (STEEL WIRE) (ALT)	Part	QQ-W-461	////FIN. 5/	8.0000	GM	1.0000	
13-10-19	GASKET (ASBESTOS)	Part	HH-P-46	///1//			1.0000	
13-10-10	PIN HINGE (STEEL)	Part	ASTM-A108	//1020///			1.0000	
13-10-9	RING PULL (STEEL WIRE)	Part	QQ-W-461	//1020///			1.0000	
13-10-8	SPRING (STEEL WIRE)	Part	QQ-W-470				1.0000	

USADACS - MIDAS DETAILED STRUCTURE FOR A MUNITION (LESS BULK ITEMS)

Nomenclature: GREN HAND SMK RED M18
NSN: 1330002896852 DODIC: G950 Reported Weight: 19.0000 OZ (1.1875 LB)

DRAWING #	NOMENCLATURE	TYPE	SPECIFICATION	TGCS	-- REPORTED --- WEIGHT	UNIT	FACTOR	FACTORED WEIGHT(LB)
13-10-5	LEVER (STEEL)	Part	ASTM-A621		10.0000	GM	1.0000	0.02205000
13-10-56	CTG DELAY ASSY	Component					1.0000	
13-10-54	CASE (AL ALLOY)	Part	QQ-A-225/7				1.0000	
13-10-54	CASE (AL ALLOY) (ALT)	Part	QQ-A-250/8				1.0000	
13-10-55	IGN COMPOSITION (MIX KCLO4 30.0%)	Part			15.0000	MG	1.0000	0.00003300
	TI TECHNICAL (69.50%)	Compound	MIL-T-13405	/1////				
	K PERCHLORATE (29.50%)	Compound	MIL-P-217	//A/4//				
	VINYL ALCOHOL (0.50%)	Compound	MIL-V-50433					
	ACETONE (0.50%)	Compound	O-A-51					
	PEP (MIXTURE ZR PWDR 65.0%)	Part	MIL-P-22264		30.0000	MG	1.0000	0.00006600
	ZR PWDR (65.00%)	Compound	MIL-Z-399	/2//1//				
	FE OXIDE (25.00%)	Compound	MIL-I-706	/1//2//				
	DIATOMACEOUS EARTH (10.00%)	Compound	MIL-D-20550					
	PEP (DELAY COMP MIX)	Part	MIL-M-21383		600.0000	MG	1.0000	0.00132300
	MN PWDR (42.00%)	Compound	JAN-M-476	//1///				
	BA CHROMATE (5.00%)	Compound	MIL-B-550	//A///				
	PB CHROMATE (53.00%)	Compound	JAN-L-488					
8798919	PRIMER PERC M39A1 ASSY	Component	MIL-P-12951				1.0000	
8798921	BODY (CU ALLOY)	Part	MIL-C-50				1.0000	
8798923	DISC (PAPER SEALING)	Part	MIL-P-60169	/2////			1.0000	
8798920	ANVIL (CU ALLOY)	Part	MIL-C-50				1.0000	
8798922	CUP (CU ALLOY)	Part	MIL-C-21768				1.0000	
	PEP (PRIMER MIX)	Part	9278188		0.4000	GR	1.0000	0.00005700
	K CHLORATE (37.05%)	Compound	MIL-P-150	//A/2//				
	PB THIOCYANATE (38.13%)	Compound	JAN-L-65					
	TNT (5.69%)	Compound	MIL-T-248	/1////				
	BA NITRATE (8.68%)	Compound	MIL-B-162					
	GROUND GLASS (10.45%)	Compound	JAN-G-479					
13-10-13	STRIKER ASSY	Component					1.0000	
13-10-15	STRIKER POINT (STEEL)	Part	ASTM-A576	//1020///			1.0000	
13-10-15	STRIKER POINT (STEEL) (ALT)	Part	ASTM-A108	//1117///			1.0000	
13-10-14	STRIKER (STEEL)	Part	ASTM-A621				1.0000	
13-10-14	STRIKER (STEEL) (ALT)	Part	ASTM-A619				1.0000	
4116-65	PKG FOR NSN 1330002896852	Component					1.0000	
4116/65	PALLET 40" X 48" (WOOD)	Part	MIL-P-15011	/I//1/I/	80.0000	LB	0.0010	0.08000000
13-9-120	PACKING ASSY GREN	Component					1.0000	
13-9-119	CNTR (CHIPBOARD)	Part	UU-C-282	/3//1//	5.7500	OZ	1.0000	0.35937500
13-19-143	SPACER (FIBERBOARD)	Part	PPP-F-320	/SF/W6S///			1.0000	
13-9-118	COLLAR FUZE PROTECTOR (FIBER CNTR)	Part	MIL-C-2439	/COMM.////	9.0000	GM	1.0000	0.01984500
13-9-105	CONTINUOUS LABEL (TAPE VINYL PLASTIC)	Part	PPP-T-66	/2////			1.0000	
13-9-120*1	TAPE (PLASTIC FILM TAPE)	Part	MIL-T-43036	/1////			1.0000	
13-9-102	BOX PACKING ASSY	Component					0.0625	
13-9-102*2	FILLER (FIBERBOARD)	Part	PPP-B-636	/1//2//			1.0000	
13-9-102*1	BOX PACKING (WOOD)	Part	PPP-B-621	/2//4/4/	5.0000	LB	1.0000	0.31250000
								1.60109700

USADACS - MIDAS DETAILED STRUCTURE FOR A MUNITION (LESS BULK ITEMS)

06/09/97

Nomenclature: GREN HAND SMK VIO M18

NSN: 1330002896853 DODIC: G955 Reported Weight: 19.0000 OZ (1.1875 LB)

DRAWING #	NOMENCLATURE	TYPE	SPECIFICATION	TGCS	-- REPORTED --- WEIGHT	UNIT	FACTOR	FACTORED WEIGHT(LB)
13-19-37	GREN HAND SMK VIO M18	Munition	MIL-G-12326		19.0000	OZ	1.0000	
143-5-1	VIOLET SMK IV (SMK MIX VIOLET)	Part			11.5000	OZ	1.0000	0.71875000
	DYE VIOLET (42.00%)	Compound	MIL-D-3691					
	NA BICARBONATE (24.00%)	Compound	O-S-576					
	K CHLORATE (25.00%)	Compound	MIL-P-150	//B/7//				
	S (9.00%)	Compound	MIL-S-487	//E///				
13-19-82	BODY ASSY	Component					1.0000	
13-19-81	BOTTOM GREN BODY (SN PLATE)	Part	MIL-S-10104	/6////			1.0000	
13-19-81	BOTTOM GREN BODY (SN PLATE) (ALT)	Part	QQ-T-425	/1/4/75//			1.0000	
13-19-81	BOTTOM GREN BODY (STEEL) (ALT)	Part	ASTM-A308	/1/A///			1.0000	
13-19-82-1	BODY (SN PLATE) (ALT)	Part	MIL-S-10104	/7////			1.0000	
13-19-82-1	BODY (SN PLATE)	Part	MIL-S-10104	/6////			1.0000	
13-19-82-1	BODY (SN PLATE) (ALT)	Part	QQ-T-425	/1/4/75//			1.0000	
13-19-82-1	BODY (STEEL) (ALT)	Part	ASTM-A308	/1/A///			1.0000	
13-19-81	BOTTOM GREN BODY (SN PLATE) (ALT)	Part	MIL-S-10104	/7////			1.0000	
13-19-70	TOP ASSY	Component					1.0000	
13-19-78	ADAPTER (BRS)	Part	QQ-B-626	////COMP 11/			1.0000	
13-19-71	TOP GREN (SN PLATE)	Part	MIL-S-10104	/6////			1.0000	
13-19-71	TOP GREN BODY (SN PLATE) (ALT)	Part	QQ-T-425	/1/4/75//			1.0000	
13-19-71	TOP GREN BODY (STEEL) (ALT)	Part	ASTM-A308	/1/A///			1.0000	
13-19-71	TOP GREN (SN PLATE) (ALT)	Part	MIL-S-10104	/7////			1.0000	
13-19-72	TOP ASSY (ALT)	Component					1.0000	
13-19-74	ADAPTER (STEEL)	Part	ASTM-A519				1.0000	
13-19-74	ADAPTER (STEEL) (ALT)	Part	ASTM-A108				1.0000	
13-19-69	TOP GREN (STEEL)	Part	ASTM-A621				1.0000	
13-19-69	TOP GREN (STEEL) (ALT)	Part	ASTM-A619				1.0000	
13-19-69	TOP GREN (STEEL) (ALT)	Part	ASTM-A622				1.0000	
13-19-285	EXPULSION-IGN STARTER ASSY	Component					1.0000	
13-19-281	EXPULSION-IGN CUP (POLYETHYLENE PLASTIC)	Part	L-P-390				1.0000	
13-19-282	STARTER CUP DISC (CHIPBOARD)	Part	UU-C-282	/1/3/H//			1.0000	
13-19-284	STARTER MIXTURE (MIX KNO3 49.1%)	Part			7.0000	GM	1.0000	0.01543500
	SI (36.40%)	Compound	MIL-S-230	//2/C//				
	K NITRATE (49.10%)	Compound	MIL-P-156	///1//				
	CHARCOAL (5.50%)	Compound	JAN-C-178	///D//				
	STEARIC ACID (5.00%)	Compound	MIL-S-271	//TECH.///				
	NC (4.00%)	Compound	MIL-N-244	//D///				
143-7-3	STARTER MIXTURE (MIX KCLO3 25.9%) (ALT)	Part			190.0000	GR	1.0000	
	K CHLORATE (25.90%)	Compound	MIL-P-150	//B/7//				
	S (10.10%)	Compound	MIL-S-478	//E///				
	NA BICARBONATE (18.00%)	Compound	O-S-576					
	CORN STARCH (6.00%)	Compound	N-C-541	//D///				
	NC (1.60%)	Compound	MIL-N-244					
	ACETONE (38.40%)	Compound	O-A-51					
13-10-22	FUZE HAND GREN M201A1	Component	MIL-F-10080		0.1600	LB	1.0000	
13-10-57	BODY FUZE (ZN ALLOY)	Part	QQ-Z-363		24.5000	GM	1.0000	0.05402300
13-10-12	PIN SAFETY (STEEL)	Part	MS24665-212		8.0000	GM	1.0000	0.01764000
13-10-12	PIN SAFETY (STEEL WIRE) (ALT)	Part	QQ-W-461	////FIN. 1/	8.0000	GM	1.0000	
13-10-12	PIN SAFETY (STEEL WIRE) (ALT)	Part	QQ-W-461	////FIN. 5/	8.0000	GM	1.0000	
13-10-19	GASKET (ASBESTOS)	Part	HH-P-46	///1//			1.0000	
13-10-10	PIN HINGE (STEEL)	Part	ASTM-A108	//1020///			1.0000	
13-10-9	RING PULL (STEEL WIRE)	Part	QQ-W-461	//1020///			1.0000	
13-10-8	SPRING (STEEL WIRE)	Part	QQ-W-470				1.0000	

USADACS - MIDAS DETAILED STRUCTURE FOR A MUNITION (LESS BULK ITEMS)

Nomenclature: GREN HAND SMK VIO M18
NSN: 1330002896853 DODIC: G955 Reported Weight: 19.0000 OZ (1.1875 LB)

DRAWING #	NOMENCLATURE	TYPE	SPECIFICATION	TGCS	-- REPORTED --- WEIGHT	UNIT	FACTOR	FACTORED WEIGHT(LB)
13-10-5	LEVER (STEEL)	Part	ASTM-A621		10.0000	GM	1.0000	0.02205000
13-10-56	CTG DELAY ASSY	Component					1.0000	
13-10-54	CASE (AL ALLOY)	Part	QQ-A-225/7				1.0000	
13-10-54	CASE (AL ALLOY) (ALT)	Part	QQ-A-250/8				1.0000	
13-10-55	IGN COMPOSITION (MIX KCLO4 30.0%)	Part			15.0000	MG	1.0000	0.00003300
	TI TECHNICAL (69.50%)	Compound	MIL-T-13405	/1////				
	K PERCHLORATE (29.50%)	Compound	MIL-P-217	//A/4//				
	VINYL ALCOHOL (0.50%)	Compound	MIL-V-50433					
	ACETONE (0.50%)	Compound	O-A-51					
	PEP (MIXTURE ZR PWDR 65.0%)	Part	MIL-P-22264		30.0000	MG	1.0000	0.00006600
	ZR PWDR (65.00%)	Compound	MIL-Z-399	/2//1//				
	FE OXIDE (25.00%)	Compound	MIL-I-706	/1//2//				
	DIATOMACEOUS EARTH (10.00%)	Compound	MIL-D-20550					
	PEP (DELAY COMP MIX)	Part	MIL-M-21383		600.0000	MG	1.0000	0.00132300
	MN PWDR (42.00%)	Compound	JAN-M-476	//1///				
	BA CHROMATE (5.00%)	Compound	MIL-B-550	//A///				
	PB CHROMATE (53.00%)	Compound	JAN-L-488					
8798919	PRIMER PERC M39A1 ASSY	Component	MIL-P-12951				1.0000	
8798921	BODY (CU ALLOY)	Part	MIL-C-50				1.0000	
8798923	DISC (PAPER SEALING)	Part	MIL-P-60169	/2////			1.0000	
8798920	ANVIL (CU ALLOY)	Part	MIL-C-50				1.0000	
8798922	CUP (CU ALLOY)	Part	MIL-C-21768				1.0000	
	PEP (PRIMER MIX)	Part	9278188		0.4000	GR	1.0000	0.00005700
	K CHLORATE (37.05%)	Compound	MIL-P-150	//A/2//				
	PB THIOCYANATE (38.13%)	Compound	JAN-L-65					
	TNT (5.69%)	Compound	MIL-T-248	/1////				
	BA NITRATE (8.68%)	Compound	MIL-B-162					
	GROUND GLASS (10.45%)	Compound	JAN-G-479					
13-10-13	STRIKER ASSY	Component					1.0000	
13-10-15	STRIKER POINT (STEEL)	Part	ASTM-A576	//1020///			1.0000	
13-10-15	STRIKER POINT (STEEL) (ALT)	Part	ASTM-A108	//1117///			1.0000	
13-10-14	STRIKER (STEEL)	Part	ASTM-A621				1.0000	
13-10-14	STRIKER (STEEL) (ALT)	Part	ASTM-A619				1.0000	
4116-65	PKG FOR NSN 1330002896853	Component					1.0000	
4116/65	PALLET 40" X 48" (WOOD)	Part	MIL-P-15011	/I//1/I/	80.0000	LB	0.0010	0.08000000
13-9-102	BOX PACKING ASSY	Component					0.0620	
13-9-102*2	FILLER (FIBERBOARD)	Part	PPP-B-636	/1//2//			1.0000	
13-9-102*1	BOX PACKING (WOOD)	Part	PPP-B-621	/2//4/4/	5.0000	LB	1.0000	0.31000000
13-9-120	PACKING ASSY GREN	Component					1.0000	
13-9-119	CNTR (CHIPBOARD)	Part	UU-C-282	/3//1//	5.7500	OZ	1.0000	0.35937500
13-19-143	SPACER (FIBERBOARD)	Part	PPP-F-320	/SF/W6S///			1.0000	
13-9-118	COLLAR FUZE PROTECTOR (FIBER CNTR)	Part	MIL-C-2439	/COMM.////	9.0000	GM	1.0000	0.01984500
13-9-105	CONTINUOUS LABEL (TAPE VINYL PLASTIC)	Part	PPP-T-66	/2////			1.0000	
13-9-120*1	TAPE (PLASTIC FILM TAPE)	Part	MIL-T-43036	/1////			1.0000	
								1.59859700

MIDAS: Detailed Structure G963

Nomenclature:	GREN HAND RIOT CS
NSN:	1330001281027
DODIC:	G963
Drawing #:	13-22-35
Family:	CR
Reported weight:	15.5000 OZ
Specification:	MIL-G-60087
Remarks:	

#	Type	Drawing#	Nomenclature	Weight
*1	*Munition	*13-22-35	GREN HAND RIOT CS	*15.50 OZ
*2	*Part		PELLET CS SUGAR COATED (PELLET CS SUGAR COATED)	4.50 OZ
*3	*Compound		----CS (81.10%)	
*4	*Compound		----SUGAR (16.50%)	
*5	*Compound		----WAX (2.40%)	
*6	*Part		--FUEL MIX 6 (FUEL MIX 6)	*7.35 OZ
*7	*Compound		----K CHLORATE (40.96%)	
*8	*Compound		----SUGAR (27.30%)	
*9	*Compound		----MG CARBONATE (29.26%)	
*10	*Compound		----NC (2.48%)	
*11	*Part		--STARTER MIX 12 (STARTER MIX 12)	*1.50 OZ
*12	*Compound		----K NITRATE (67.68%)	
*13	*Compound		----CHARCOAL (28.32%)	
*14	*Compound		----NC (4.00%)	
*15	*Part	13-22-35*1	--TAPE (TAPE PRESSURE SENSITIVE)	*0.00
*16	*Component	*13-22-30	--TOP ASSY	*0.00
*17	*Part	*13-22-31	----TOP (STEEL)	*0.00
*18	*Bulk item		------ENAMEL	
*19	*Bulk item		------ENAMEL (ALT)	
*20	*Bulk item		------LACQUER	
*21	*Bulk item		------SEALING COMPOUND	
*22	*Bulk item		------ZN PHOSPHATE	
*23	*Part	*13-22-15	----ADAPTER (STEEL)	*0.00
*24	*Bulk item		------ENAMEL	
*25	*Bulk item		------ENAMEL (ALT)	
*26	*Bulk item		------LACQUER	
*27	*Bulk item		------SEALING COMPOUND	
*28	*Part	*13-22-15	----ADAPTER (STEEL) (ALT)	*0.00
*29	*Bulk item		------ENAMEL	
*30	*Bulk item	*	------ENAMEL ALKYD (ALT)	

*31	*Bulk item	*	------ZN PHOSPHATE	
*32	*Bulk item	*	------SEALING COMPOUND	
*33	*Component	*13-22-32	--TOP ASSY (ALT)	*0.00
*34	*Part	*13-22-33	----TOP (TINPLATE)	*0.00
*35	*Bulk item	*	------ENAMEL	
*36	*Bulk item	*	------ENAMEL (ALT)	
*37	*Bulk item	*	------LACQUER	
*38	*Bulk item	*	------SEALING COMPOUND	
*39	*Bulk item	*	------ZN PHOSPHATE	
*40	*Part	*13-22-33	----TOP (TINPLATE) (ALT)	*0.00
*41	*Bulk item	*	------ENAMEL	
*42	*Bulk item	*	------ENAMEL (ALT)	
*43	*Bulk item	*	------LACQUER	
*44	*Bulk item	*	------SEALING COMPOUND	
*45	*Bulk item	*	------ZN PHOSPHATE	
*46	*Part	*13-22-33	----TOP (TERNPLATE) (ALT)	*0.00
*47	*Bulk item	*	------ENAMEL	
*48	*Bulk item	*	------ENAMEL (ALT)	
*49	*Bulk item	*	------LACQUER	
*50	*Bulk item	*	------SEALING COMPOUND	
*51	*Bulk item	*	------ZN PHOSPHATE	
*52	*Part	*13-22-33	----TOP (TERNPLATE)	*0.00
*53	*Bulk item	*	------ENAMEL	
*54	*Bulk item	*	------ENAMEL (ALT)	
*55	*Bulk item	*	------LACQUER	
*56	*Bulk item	*	------SEALING COMPOUND	
*57	*Bulk item	*	------ZN PHOSPHATE	
*58	*Part	*13-20-5	----ADAPTER (BRASS)	*0.00
*59	*Bulk item	*	------SEALING COMPOUND	
*60	*Bulk item	*	------SN-PB SOLDER	
*61	*Component	*13-20-56	--BODY ASSY	*1.99 OZ
*62	*Part	*13-20-57	----BOTTOM (TINPLATE)	*0.00
*63	*Bulk item	*	------ENAMEL	
*64	*Bulk item	*	------ENAMEL (ALT)	
*65	*Bulk item	*	------ZN PHOSPHATE	
*66	*Bulk item	*	------SEALING COMPOUND	
*67	*Bulk item	*	------SN-PB SOLDER	
*68	*Part	*13-20-57	----BOTTOM (TERNLATE) (ALT)	*0.00
*69	*Bulk item	*	------ENAMEL	
*70	*Bulk item	*	------ENAMEL (ALT)	

*71	*Bulk item	*	------ZN PHOSPHATE	
*72	*Bulk item	*	------SEALING COMPOUND	
*73	*Bulk item	*	------SN-PB SOLDER	
*74	*Part	*13-20-56-1	----BODY (TINPLATE)	*0.00
*75	*Bulk item	*	------ENAMEL	
*76	*Bulk item	*	------ENAMEL ALKYD (ALT)	
*77	*Bulk item	*	------ZN PHOSPHATE	
*78	*Bulk item	*	------SEALING COMPOUND	
*79	*Bulk item	*	------SN-PB SOLDER	
*80	*Bulk item	*	------STENCIL INK	
*81	*Part	*13-20-56-2	----BODY (TERNLATE) (ALT)	*0.00
*82	*Bulk item	*	------ENAMEL	
*83	*Bulk item	*	------ENAMEL (ALT)	
*84	*Bulk item	*	------LACQUER	
*85	*Bulk item	*	------ZN PHOSPHATE	
*86	*Bulk item	*	------SEALING COMPOUND	
*87	*Bulk item	*	------SN-PB SOLDER	
*88	*Bulk item	*	------STENCIL INK	
*89	*Component	*13-10-22	--FUZE HAND GREN M201A1	*0.16 LB
*90	*Part	*13-10-57	----BODY FUZE (ZN ALLOY)	*24.50 GM
*91	*Bulk item	*	------CHROMATE COATING	
*92	*Part	*13-10-12	----PIN SAFETY (STEEL)	*8.00 GM
*93	*Bulk item	*	------CD COATING	
*94	*Bulk item	*	------CHROMATE COATING (ALT)	
*95	*Part	*13-10-12	----PIN SAFETY (STEEL WIRE) (ALT)	*8.00 GM
*96	*Bulk item	*	------ZN CHROMATE	
*97	*Part	*13-10-12	----PIN SAFETY (STEEL WIRE) (ALT)	*8.00 GM
*98	*Bulk item	*	------ZN CHROMATE	
*99	*Part	*13-10-19	----GASKET (ASBESTOS)	*0.00
100	*Part	*13-10-10	----PIN HINGE (STEEL)	*0.00
101	*Bulk item	*	------ZN CHROMATE	
102	*Part	*13-10-9	----RING PULL (STEEL WIRE)	*0.00
103	*Bulk item	*	------ZN CHROMATE	
104	*Part	*13-10-8	----SPRING (STEEL WIRE)	*0.00
105	*Bulk item	*	------CD COATING	
106	*Bulk item	*	------ZN CHROMATE (ALT)	
107	*Part	*13-10-5	----LEVER (STEEL)	*10.00 GM
108	*Bulk item	*	------ZN CHROMATE	
109	*Bulk item	*	------STENCIL INK	

110	*Component	*13-10-56	----CTG DELAY ASSY	*0.00
111	*Part	*13-10-54	------CASE (AL ALLOY)	*0.00
112	*Bulk item	*	--------VARNISH	
113	*Part	*13-10-54	------CASE (AL ALLOY) (ALT)	*0.00
114	*Bulk item	*	--------VARNISH	
115	*Part	*	------PEP (IGN COMP)	*15.00 MG
116	*Compound	*	--------TI PWDR (69.50%)	
117	*Compound	*	--------K PERCHLORATE (29.50%)	
118	*Compound	*	--------VINYL ALCOHOL (0.50%)	
119	*Compound	*	--------ACETONE (0.50%)	
120	*Part	*	------PEP (DELAY COMP MIX)	600.00 MG
121	*Compound	*	--------MN PWDR (42.00%)	
122	*Compound	*	--------BA CHROMATE (5.00%)	
123	*Compound	*	--------PB CHROMATE (53.00%)	
124	*Part	*	------IGN PWDR A1A (IGN PWDR A1A)	*30.00 MG
125	*Compound	*	--------ZR (65.00%)	
126	*Compound	*	--------FE OXIDE RED (25.00%)	
127	*Compound	*	--------DIATOMACEOUS EARTH (10.00%)	
128	*Component	*8798919	------PRIMER PERC M39A1 ASSY	*0.00
129	*Part	*8798921	--------BODY (CU ALLOY)	*0.00
130	*Bulk item		----------VARNISH	
131	*Part	*8798923	--------DISC (PAPER SEALING)	*0.00
132	*Bulk item		----------SHELLAC	
133	*Part	*8798920	--------ANVIL (CU ALLOY)	*0.00
134	*Part	*8798922	--------CUP (CU ALLOY)	*0.00
135	*Bulk item		----------LACQUER CELL NITRATE	
136	*Part		--------PEP (PRIMER MIX)	*0.40 GR
137	*Compound		----------K CHLORATE (37.05%)	
138	*Compound		----------PB THIOCYANATE (38.13%)	
139	*Compound		----------TNT (5.69%)	
140	*Compound		----------BA NITRATE (8.68%)	
141	*Compound		----------GROUND GLASS (10.45%)	
142	*Component	*13-10-13	----STRIKER ASSY	*0.00
143	*Part	*13-10-15	------STRIKER POINT (STEEL)	*0.00
144	*Bulk item		--------ZN CHROMATE	
145	*Part	*13-10-15	------STRIKER POINT (STEEL) (ALT)	*0.00
146	*Bulk item		--------ZN CHROMATE	
147	*Part	*13-10-14	------STRIKER (STEEL)	*0.00
148	*Bulk item		--------ZN CHROMATE	
149	*Part	*13-10-14	------STRIKER (STEEL) (ALT)	*0.00

150	*Bulk item		--------ZN CHROMATE	

USADACS - MIDAS DETAILED STRUCTURE FOR A MUNITION (LESS BULK ITEMS)

Nomenclature: FUZE MINE M605
NSN: 1345007175770 DODIC: K058 Reported Weight: 0.3800 LB

DRAWING #	NOMENCLATURE	TYPE	SPECIFICATION	TGCS	-- REPORTED --- WEIGHT	UNIT	FACTOR	FACTORED WEIGHT(LB)
7548284	FUZE MINE M605	Munition	MIL-F-12774		0.3800	LB	1.0000	
7548284	FUZE MINE M605 ASSY	Component	MIL-F-12774				1.0000	
7548285	HEAD ASSY	Component	MIL-F-45060				1.0000	
7548304	GASKET (RUBBER)	Part	MIL-R-3065	//**///			1.0000	
7548309	SPRING STRIKER (SPRING STEEL)	Part	ASTM-A228				1.0000	
7548311	WASHER (STEEL)	Part	ASTM-A109				1.0000	
7548310	STRIKER (STEEL)	Part	ASTM-A108	//**///	4.9900	GM	1.0000	0.01100300
7548302	CASE (ZN ALLOY)	Part	ASTM-B86	//AC41A///	22.3900	GM	1.0000	0.04937000
7548302	CASE (AL ALLOY) (ALT)	Part	ASTM-B85	//**///	8.6300	GM	1.0000	
7548298	SPRING PRESSURE (SPRING STEEL)	Part	ASTM-A228				1.0000	
7548296	PLUG (ZN ALLOY)	Part	ASTM-B86				1.0000	
7548296	PLUG (AL ALLOY) (ALT)	Part	ASTM-B85	//**///			1.0000	
7548292	HEAD (ZN ALLOY)	Part	ASTM-B86	//AC41A///	42.8200	GM	1.0000	0.09441800
7548292	HEAD (AL ALLOY) (ALT)	Part	ASTM-B85	//**///	16.5000	GM	1.0000	
7548297	PRONG (SPRING STEEL)	Part	ASTM-A228		12.0600	GR	3.0000	0.00516900
7548293	HEAD SAFETY (AL ALLOY)	Part	ASTM-B211	//2017-T4///			1.0000	
7548293	HEAD SAFETY (AL ALLOY) (ALT)	Part	ASTM-B85	//**///			1.0000	
7548293	HEAD SAFETY (ZN ALLOY) (ALT)	Part	ASTM-B86	//AC41A///			1.0000	
7548299	TRIGGER (ZN ALLOY)	Part	ASTM-B86	//AS41A///			1.0000	
7548299	TRIGGER (AL ALLOY) (ALT)	Part	ASTM-B85	//**///			1.0000	
7548308	SPRING RELEASE PIN (SPRING STEEL)	Part	ASTM-A228				1.0000	
7548305	PIN RELEASE (STEEL)	Part	ASTM-A108	//**///			1.0000	
7548307	RING RELEASE PIN (SPRING STEEL)	Part	ASTM-A228				1.0000	
7548294	PIN SAFETY INTERLOCKING (SPRING STEEL)	Part	ASTM-A228				1.0000	
7548290	PIN SAFETY STRIKER POSITIVE ASSY	Component					1.0000	
7548295	PIN SAFETY STRIKER (STEEL)	Part	ASTM-A108	//**///			1.0000	
7548290*1	CORD (TWINE LINEN WAXED)	Part	MIL-T-2520				1.0000	
7548300	RELEASE PIN SAFETY PIN ASSY	Component					1.0000	
7548300*1	CORD (COTTON CORD)	Part	T-C-571	/1//1//			1.0000	
MS24665-134	PIN COTTER (STEEL)	Part	COMMERCIAL				1.0000	
MS24665-134	PIN COTTER (BRS) (ALT)	Part	QQ-B-613				1.0000	
7548286	LOADING ASSY	Component	MIL-F-45060				1.0000	
7548289	FLASH IGN ASSY	Component					1.0000	
7548314	TUBE CHG FLASH IGN (AL ALLOY)	Part	ASTM-B209	//1100-0///			1.0000	
	PEP (BLACK PWDR CL 5)	Part	MIL-P-223	///5//	648.0000	MG	1.0000	0.00142900
	K NITRATE (74.00%)	Compound	MIL-P-156	///1//				
	S (10.40%)	Compound	MIL-S-14929					
	CHARCOAL (15.60%)	Compound	JAN-C-178	///1//				
7548288	FLASH IGN HEAD ASSY	Component					1.0000	
	PEP (DELAY COMP (BA CR 60.0%))	Part	MIL-C-13739	/2////	475.0000	MG	1.0000	0.00104700
	BA CHROMATE (60.00%)	Compound	MIL-B-550	///A//				
	K PERCHLORATE (14.00%)	Compound	MIL-P-217					
	ZR-NICKEL ALLOY POW. (9.00%)	Compound	MIL-Z-11410	/1////				
	ZR-NICKEL ALLOY POW. (17.00%)	Compound	MIL-Z-11410	/2////				
7548312	HEAD FLASH IGN (AL ALLOY)	Part	ASTM-B211	//**///			1.0000	
7548312	HEAD FLASH IGN (AL ALLOY) (ALT)	Part	ASTM-B85	//**///			1.0000	
7548312	HEAD FLASH IGN (ZN ALLOY) (ALT)	Part	ASTM-B86	//AC41A///			1.0000	
7548287	PRIMER HOUSING ASSY	Component					1.0000	
7548313	HOUSING PRIMER (AL ALLOY)	Part	ASTM-B211	//**///			1.0000	
7548313	HOUSING PRIMER (AL ALLOY) (ALT)	Part	ASTM-B85	//**///			1.0000	
7548313	HOUSING PRIMER (ZN ALLOY) (ALT)	Part	ASTM-B86	//AC41A///			1.0000	
8799925	PRIMER PERC ASSY M42	Component	MIL-P-20444		5.0000	GR	1.0000	

USADACS - MIDAS DETAILED STRUCTURE FOR A MUNITION (LESS BULK ITEMS)

06/09/97

Nomenclature: FUZE MINE M605

NSN: 1345007175770 DODIC: K058 Reported Weight: 0.3800 LB

DRAWING #	NOMENCLATURE	TYPE	SPECIFICATION	TGCS	-- REPORTED --- WEIGHT	UNIT	FACTOR	FACTORED WEIGHT(LB)
8837991	CUP (AL ALLOY)	Part	QQ-A-250	//1100///	3.5000	GR	1.0000	0.00050000
8837993	COVER (PAPER SEALING)	Part	MIL-P-60169	/1////			1.0000	
8837992	ANVIL (BRS)	Part	ASTM-B19	//260///	1.0700	GR	1.0000	0.00015300
	PEP (PRIMER MIX PA-101)	Part	8799925		0.3300	GR	1.0000	0.00004700
	PB STYPHNATE (53.00%)	Compound	MIL-L-16355					
	SB SULFIDE (10.00%)	Compound	MIL-A-159	///5//				
	BA NITRATE (22.00%)	Compound	MIL-B-162	///1//				
	AL PWDR (10.00%)	Compound	MIL-P-14067	/2////				
	TETRACENE (5.00%)	Compound	MIL-T-46938					
	PEP (PRIMER MIX #793) (ALT)	Part	COMMERCIAL		0.3300	GR	1.0000	
	TNT (3.00%)	Compound	MIL-T-248					
	SB SULFIDE (30.00%)	Compound	MIL-A-159					
	CA SILICIDE (15.00%)	Compound	MIL-C-324					
	K CHLORATE (35.00%)	Compound	MIL-P-150					
	PB THIOCYANATE (17.00%)	Compound	MIL-L-65					
	PEP (PRIMER MIX #5086) (ALT)	Part	COMMERCIAL		0.3300	GR	1.0000	
	SB SULFIDE (20.00%)	Compound	MIL-A-159					
	TETRACENE (2.00%)	Compound	MIL-T-46938					
	PB STYPHNATE (26.00%)	Compound	MIL-L-757					
	CA SILICIDE (10.50%)	Compound	MIL-C-324					
	BA NITRATE (41.50%)	Compound	MIL-B-162					
								0.16313600

MIDAS: Detailed Structure K145

Nomenclature:	MINE APERS M18A1 W/ACCESSORIES
NSN:	1345009263950
DODIC:	K145
Drawing #:	8835166
Family:	HZ
Reported weight:	0.0000
Specification:	MIL-M-45423
Remarks:	This NSN packed w/o Elect test set M40 or firing device M57.

#	Type	Drawing#	Nomenclature	Weight
*1	*Munition	*8835166	MINE APERS M18A1 W/ACCESSORIES	*0.00
*2	*Part	*8800912	--TAG IDENTIFICATION (TAG)	*0.00
*3	*Bulk item	*	----STENCIL INK BLK	
*4	*Component	*8837104	--MINE APERS M18A1 ASSY	*0.00
*5	*Part	*	----PEP (COMP C4)	*1.50 LB
*6	*Compound	*	------POLYISOBUTYLENE BIND (9.50%)	
*7	*Compound	*	------RDX (22.60%)	
*8	*Compound	*	------RDX (67.90%)	
*9	*Component	*8885262	----MINE APERS M18A1 PARTS ARRANGEMENT	*0.00
*10	*Part	*8837133	------CUP WELL (AL ALLOY)	*0.00
*11	Part	8857210-1	SHIPPING PLUG PRIMING ADAPTER (POLYETHYLENE PLASTIC)	0.00
*12	*Component	*8800918	------CASE ASSY	*0.00
*13	*Part	*8800915-1	--------CASE (PLASTIC)	*0.00
*14	*Bulk item	*	----------BINDER (12913894)	
*15	*Bulk item	*	----------CEMENT (8837104)	
*16	*Part	*8800922	--------BALL (STEEL)	*0.00
*17	*Bulk item	*	----------BINDER (12913894)	
*18	*Part	*8800922	--------BALL (STEEL) (ALT)	*0.00
*19	*Bulk item	*	----------BINDER (12913894)	
*20	*Part	*8837131	--------WASHER SPRING (STAINLESS STEEL)	*0.00
*21	*Part	*8837131	WASHER SPRING (STAINLESS STEEL) (ALT)	*0.00
*22	Part	MS16535-306	--------RIVET TUBULAR (STEEL)	*0.00
*23	*Bulk item	*	----------CD CHROMATE	
*24	Part	MS25440-3	--------WASHER FLAT (STEEL)	*0.00
*25	*Bulk item	*	----------CD CHROMATE	
*26	*Part	MS25440-3	--------WASHER (STEEL) (ALT)	*0.00
*27	*Bulk item	*	----------CD CHROMATE	
*28	*Component	*8837129	--------LEG & BRACKET ASSY	*0.00
*29	*Part	*8800908	----------LEG (STEEL)	*0.00

*30	*Bulk item	*	----------ZN PHOSPHATE	
*31	*Bulk item	*	----------ENAMEL	
*32	*Bulk item	*	----------ENAMEL (ALT)	
*33	*Bulk item	*	----------ZN CHROMATE (ALT)	
*34	*Part	*8837131	----------WASHER SPRING (STAINLESS STEEL)	*0.00
*35	*Part	*8837131	WASHER SPRING (STAINLESS STEEL) (ALT)	*0.00
*36	*Part	*MS16535-307	----------RIVET TUBULAR (STEEL)	*0.00
*37	*Bulk item	*	----------CD CHROMATE	
*38	*Part	*8800907	----------BRACKET ANGLE (STEEL)	*0.00
*39	*Bulk item	*	----------ZN PHOSPHATE	
*40	*Bulk item	*	----------ENAMEL	
*41	*Bulk item	*	----------ENAMEL (ALT)	
*42	*Bulk item	*	----------ZN CHROMATE (ALT)	
*43	*Component	*12912839	------COVER ASSY	*0.00
*44	*Part	*12912838	--------TAPE BARRIER (AL TAPE)	*0.00
*45	*Part	*8800916-1	--------COVER (PLASTIC)	*0.00
*46	*Bulk item	*	----------CEMENT (8837104)	
*47	*Bulk item	*	----------STENCIL INK BLK	
*48	*Component	*8836013	--CAP BLASTING ELECT M4 ASSY	*0.00
*49	*Part	*9227086-1	----SPOOL (POLYETHYLENE PLASTIC)	1809.60 GR
*50	*Part	*9227086-1	----SPOOL (POLYETHYLENE PLASTIC) (ALT)	1809.60 GR
*51	*Part	*9227086-1	----SPOOL (PLASTIC) (ALT)	1809.60 GR
*52	*Part	*12927058	----TIEWRAP PLASTIC (PLASTIC/STEEL WIRE)	*0.00
*53	*Part	*8836013*1	----LABEL (PAPER LABEL)	*0.00
*54	*Bulk item	*	------STENCIL INK	
*55	*Component	*8835150-1	----CONNECTOR & ELECT BLASTING CAP ASSY	*0.00
*56	*Part	*8830953-2	------CUP (AL ALLOY)	13.35 GR
*57	*Part	*	------PEP (RDX)	14.50 GR
*58	*Compound	*	--------RDX (100.00%)	
*59	*Part	*	------PEP (PB AZIDE)	270.00 MG
*60	*Compound	*	--------PB AZIDE (100.00%)	
*61	*Part	*	------PEP (IGN CHG)	*1.50 GR
*62	*Compound	*	--------K CHLORATE (25.00%)	
*63	*Compound	*	--------PWDR SMOKELESS (50.00%)	
*64	*Compound	*	--------PB SALT-DNOC (25.00%)	
*65	*Component	*9260223-1	------PLUG ASSY	*0.00
*66	*Part	*9260223*1	--------PLUG (RUBBER)	18.00 GR
*67	*Part	*9260223*2	--------WIRE BRIDGE (PT 79% RH 15% RU 6%)	*0.00 GR
*68	*Bulk item	*	----------SN-PB SOLDER	
*69	*Bulk item	*	----------SN-PB SOLDER (ALT)	

*70	*Part	*9260223*3	--------PINS WIRE (CU ALLOY)	*1.10 GR
*71	*Bulk item	*	----------SN-PB SOLDER	
*72	*Bulk item	*	----------SN-PB SOLDER (ALT)	
*73	*Part	*9260223*3	--------PINS WIRE (CU ALLOY) (ALT)	*1.10 GR
*74	*Bulk item	*	----------SN-PB SOLDER	
*75	*Bulk item	*	----------SN-PB SOLDER (ALT)	
*76	*Component	*9275967-1	--------WIRE & CONNECTOR ASSY	*0.00
*77	*Part	*9275967*1	----------WIRE CABLE (CU ALLOY)	3448.10 GR
*78	*Part	9275967*2	RUBBER WIRE COVERING (ETHYLENE-PROPYLENE)	*0.00
*79	*Component	*8800910	FEMALE CONNECTOR W/SHORTING PLUG	*0.00
*80	*Part	*8885031	SLEEVE CONTACT (PAPER DIELECTRIC)	*0.00
*81	*Part	*8885031	SLEEVE CONTACT (NEOPRENE RUBBER) (ALT)	*0.00
*82	*Part	*8863763	----------CONTACT FEMALE (BRASS)	*202.30 GR
*83	*Part	*8863763	----------CONTACT FEMALE (BRASS) (ALT)	*202.30 GR
*84	*Part	*8800910*1	----------BODY (RUBBER)	*381.68 GR
*85	*Part	*8800910*1	----------BODY (RUBBER) (ALT)	*381.68 GR
*86	*Part	*8800910*1	----------BODY (RUBBER) (ALT)	*381.68 GR
*87	*Part	*8861595	----------PRONG SHORTING (BRASS)	*13.90 GR
*88	*Component	*8836015	--BANDOLEER APERS MINE M7 ASSY	*0.00
*89	*Part	8836102	INSTRUCTION SHEET M18A1 (PAPER PLASTIC COATED)	*0.00
*90	*Bulk item	*	------INK DYNASET BLK	
*91	*Bulk item	*	------THREAD COTTON MACHINE	
*92	*Bulk item	*	------THREAD NYLON (ALT)	
*93	*Bulk item	*	------THREAD POLYESTER (ALT)	
*94	*Part	*8836102	----INSTRUCTION SHEET M18A1 (CLOTH) (ALT)	*0.00
*95	*Bulk item	*	------INK DYNASET BLK	
*96	*Bulk item	*	------THREAD COTTON MACHINE	
*97	*Bulk item	*	------THREAD NYLON (ALT)	
*98	*Bulk item	*	------THREAD POLYESTER (ALT)	
*99	*Component	*8835945	----BANDOLEER APERS MINE ASSY	*0.00
*100	*Part	*8835943	------STRAP BANDOLEER (COTTON TAPE)	*0.00
*101	*Bulk item	*	--------THREAD COTTON MACHINE	
*102	*Bulk item	*	--------TREATMENT	
*103	*Bulk item	*	--------THREAD NYLON (ALT)	
*104	*Bulk item	*	--------THREAD POLYESTER (ALT)	
*105	*Part	*8835943	------STRAP BANDOLEER (COTTON) (ALT)	*0.00
*106	*Bulk item	*	--------THREAD COTTON MACHINE	
*107	*Bulk item	*	--------TREATMENT	
*108	*Bulk item	*	--------THREAD NYLON (ALT)	
*109	*Bulk item	*	--------THREAD POLYESTER (ALT)	

*110	*Part	*8835942	------BODY BANDOLEER (COTTON)	*0.00
*111	*Bulk item	*	--------THREAD COTTON MACHINE	
*112	*Bulk item	*	--------TREATMENT	
*113	*Bulk item	*	--------THREAD NYLON (ALT)	
*114	*Bulk item	*	--------THREAD POLYESTER (ALT)	
*115	*Part	*MS27980-7B	------STUD SNAP FASTENER (BRASS)	*0.00
*116	*Part	*MS27980-8B	------SNAP EYELET FASTENER (BRASS)	*0.00
*117	*Component	*8835946	------BANDOLEER FLAP ASSY	*0.00
*118	*Part	*8835944	--------FLAP BANDOLEER (COTTON)	*0.00
*119	*Bulk item	*	----------THREAD COTTON MACHINE	
*120	*Bulk item	*	----------TREATMENT	
*121	*Bulk item	*	----------THREAD NYLON (ALT)	
*122	*Bulk item	*	----------THREAD POLYESTER (ALT)	
*123	*Part	*9254904	--------TIE FLAP (COTTON TAPE)	*0.00
*124	*Bulk item	*	----------THREAD COTTON MACHINE	
*125	*Bulk item	*	----------TREATMENT	
*126	*Bulk item	*	----------THREAD NYLON (ALT)	
*127	*Bulk item	*	----------THREAD POLYESTER (ALT)	
*128	*Part	*MS27980-8B	--------SNAP EYELET FASTENER (BRASS)	*0.00
*129	*Part	*MS27980-6B	--------SNAP SOCKET FASTENER (BRASS)	*0.00

USADACS - MIDAS DETAILED STRUCTU. . FOR A MUNITION (LESS BULK ITEMS)

06/09/97

Nomenclature: SIGNAL ILLUM GRND M158

NSN: 1370007562591 DODIC: L306 Reported Weight: 1.1100 LB

DRAWING #	NOMENCLATURE	TYPE	SPECIFICATION	TGCS	-- REPORTED --- WEIGHT	UNIT	FACTOR	FACTORED WEIGHT(LB)
8797920	SIGNAL ILLUM GRND M158	Munition	MIL-S-13261		1.1100	LB	1.0000	
8797929	BARREL ROCKET (AL ALLOY)	Part	QQ-A-225/1				1.0000	
	PEP (BLACK PWDR CL 5)	Part	MIL-P-223	///5//	710.0000	MG	1.0000	0.00156600
	K NITRATE (74.00%)	Compound	MIL-P-156	///1//				
	S (10.40%)	Compound	MIL-S-14929					
	CHARCOAL (15.60%)	Compound	JAN-C-178	///1//				
8797937	WASHER BARREL ROCKET (WOOL FELT)	Part	C-F-206	/1//12R3//			1.0000	
8797927	WASHER RETAINING (CHIPBOARD)	Part	UU-C-282				1.0000	
9235026	PLATE EXHAUST (STAINLESS STEEL)	Part	ASTM-A582	/416////			1.0000	
9235026	PLATE EXHAUST (STAINLESS STEEL) (ALT)	Part	QQ-S-763	/410////			1.0000	
8797936	SPACER PROP (KRAFT PAPER)	Part	UU-P-268	//A///			1.0000	
8797921	TUBE CASING (STAINLESS TUBING)	Part	MIL-T-8606	/1 AND 2////			1.0000	
8797921	TUBE CASING (STAINLESS STEEL) (ALT)	Part	ASTM-A269				1.0000	
9328587	PROP SPACER SLOTTED (KRAFT PAPER)	Part	UU-P-268	/A////			1.0000	
8797928	BOLT (STAINLESS STEEL)	Part	ASTM-A484	///416//			1.0000	
8797928	BOLT (STAINLESS STEEL) (ALT)	Part	QQ-S-763	///410//			1.0000	
8797925	WASHER BACKING (HARDBOARD)	Part	LLL-B-810	/1////			1.0000	
8797923	SEAL (CORK)	Part	HH-C-576	///2//			1.0000	
8797922	SEAL BARREL ROCKET (CORK)	Part	HH-C-576	///2//			1.0000	
8797931	LABEL (PAPER PRESSURE SENSITIVE)	Part	COMMERCIAL				1.0000	
	PEP (BLACK PWDR CL 5)	Part	MIL-P-223	///5//	750.0000	MG	1.0000	0.00165400
	K NITRATE (74.00%)	Compound	MIL-P-156	///1//				
	S (10.40%)	Compound	MIL-S-14929					
	CHARCOAL (15.60%)	Compound	JAN-C-178	///1//				
8797961	SIGNAL BODY & DELAY ASSY	Component	ANSI Y14.5-1982				1.0000	
8797963	BODY SIGNAL (AL ALLOY)	Part	QQ-A-225/1				1.0000	
9251412	DELAY ASSY	Component					1.0000	
9251411	HOUSING DELAY (AL ALLOY)	Part	QQ-A-225/5				1.0000	
9251411	HOUSING DELAY (AL ALLOY) (ALT)	Part	QQ-A-225/60				1.0000	
	PEP (FLASH COMP)	Part			90.0000	MG	1.0000	0.00019800
	ZR (58.00%)	Compound	MIL-Z-399	/2//1//				
	CR OXIDE (16.00%)	Compound	J5350					
	MO TRIOXIDE (25.00%)	Compound	MIL-M-48146					
	VINYL ALCOHOL (1.00%)	Compound	MIL-V-50433					
	PEP (IGN COMP MIX) (ALT)	Part	9206942		80.0000	MG	1.0000	
	B (25.00%)	Compound	MIL-B-51092	/1////				
	K PERCHLORATE (75.00%)	Compound	MIL-P-217	//A/4//				
	PEP (BLACK PWDR CL 7) (ALT)	Part	MIL-P-223	///7//	140.0000	MG	1.0000	
	K NITRATE (74.00%)	Compound	MIL-P-156	///A//				
	S (10.40%)	Compound	MIL-S-14929	/1/COMM.///				
	CHARCOAL (15.60%)	Compound	JAN-C-178	//A///				
	PEP (DELAY COMP)	Part	9251412		570.0000	MG	1.0000	0.00125700
	VINYL ALCOH ACETATE (0.30%)	Compound	MIL-V-50433					
	K PERCHLORATE (11.40%)	Compound	MIL-P-217	//A/4//				
	BA CHROMATE (56.30%)	Compound	MIL-B-550	//C///				
	W (32.00%)	Compound	MIL-T-48140	/1////				
8839489-1	ILLUMINANT ASSY	Component					1.0000	
8797957	TUBE STAR (KRAFT PAPER)	Part	UU-P-268	//A///			1.0000	
8797957	TUBE STAR (BOXBOARD) (ALT)	Part	MIL-B-20467				1.0000	
	PEP (RED STAR COMP)	Part			0.5000	OZ	1.0000	0.03125000
	BINDER (4.00%)	Compound	COMMERCIAL					
	POLYVINYL CHLORIDE (15.00%)	Compound	MIL-P-20307					

USADACS - MIDAS DETAILED STRUCTURE FOR A MUNITION (LESS BULK ITEMS)

Nomenclature: SIGNAL ILLUM GRND M158
NSN: 1370007562591 DODIC: L306 Reported Weight: 1.1100 LB

DRAWING #	NOMENCLATURE	TYPE	SPECIFICATION	TGCS	-- REPORTED --- WEIGHT	UNIT	FACTOR	FACTORED WEIGHT(LB)
	MG 30/50 (33.00%)	Compound	MIL-P-14067	/1////				
	SR NITRATE (48.00%)	Compound	MIL-S-20322	//B///				
	PEP (FIRST FIRE COMP)	Part		/2////			1.0000	
	SR NITRATE (50.00%)	Compound	MIL-S-20322	//A OR B///				
	TETRANITROCARBOZOLE (10.00%)	Compound	MIL-T-13723					
	SI (16.00%)	Compound	MIL-S-230					
	POLYVINYL CHLORIDE (5.00%)	Compound	MIL-P-20307					
	ZR HYDRIDE (15.00%)	Compound	COMMERCIAL					
	LAMINAC 4116/LUPERSL (4.00%)	Compound	COMMERCIAL					
	PEP (QUICKMATCH MIX)	Part	MIL-Q-378	/2//A//	2.0000	GR	1.0000	0.00028600
	COTTON WICK (0.00%)	Compound	COMMERCIAL					
	K NITRATE (74.00%)	Compound	MIL-P-156					
	CHARCOAL (15.60%)	Compound	JAN-C-178					
	S (10.40%)	Compound	JAN-S-487					
8797947	TAIL ASSY	Component	ANSI Y14.5M-82				1.0000	
8797948	RING UPPER TAIL (STAINLESS TUBING)	Part	MIL-T-8606				1.0000	
8797948	RING UPPER TAIL (STAINLESS TUBING) (ALT)	Part	MIL-T-8606	/2////			1.0000	
8797949	RING LOWER TAIL (STAINLESS TUBING)	Part	MIL-T-8606				1.0000	
8797949	RING LOWER TAIL (STAINLESS TUBING) (ALT)	Part	MIL-T-8606	/2////			1.0000	
8797950	TAILVANE & RIB ASSY	Component	AWS A2.0				4.0000	
8797951	VANE TAIL (STEEL)	Part	COMMERCIAL	/420////			1.0000	
8797951	VANE TAIL (STEEL) (ALT)	Part	COMMERCIAL	/410////			1.0000	
8797952	RIB TAIL (STAINLESS STEEL)	Part	QQ-S-766	///304//			1.0000	
8887530	PROPELLANT ASSY	Component	ANSI Y14.5-1973				1.0000	
8887529	GRAIN PROP (BLACK PWDR MIX)	Part			13.0000	GM	1.0000	0.02866500
	K NITRATE (67.40%)	Compound	MIL-P-156					
	S (9.50%)	Compound	MIL-S-14929					
	CHARCOAL (14.20%)	Compound	MIL-C-178					
	CA CARBONATE (8.90%)	Compound	MIL-C-293					
8797945	SHEATH (KRAFT PAPER)	Part	UU-P-268	//B///			1.0000	
8797941	PROTECTOR ASSY	Component					1.0000	
8797942	BLOCK PROTECTOR (WOOD)	Part	MIL-L-736				1.0000	
8797943	PROTECTOR RUBBER (RUBBER)	Part	MIL-R-3065	/R/400/RS//			1.0000	
8797938	WASHER & DISC ASSY	Component					1.0000	
8797939	WASHER (HARDBOARD)	Part	ANSI A135.4				1.0000	
8797940	DISC (TISSUE PAPER)	Part	COMMERCIAL	/16 OR 18////			1.0000	
8797940	DISC (TISSUE PAPER) (ALT)	Part	COMMERCIAL	/18 LB////			1.0000	
8797958	WASHER DISC ASSY	Component					1.0000	
8797959	DISC LOWER (PAPER ONIONSKIN)	Part	MIL-P-157				1.0000	
8797960	WASHER UPPER (WOOL FELT)	Part	C-F-206	/1//12R3//			1.0000	
8797953	FIRING CAP & SPRING CLIP ASSY	Component					1.0000	
8797955	CAP FIRING (AL ALLOY)	Part	ANSI Y14.5M-198				1.0000	
8797954	PIN FIRING (STEEL)	Part	QQ-S-637	/1117////			1.0000	
8839487	RIVET FLAT HEAD (AL ALLOY)	Part	MS20470	/1100////			1.0000	
8839486	CLIP SPRING (STAINLESS STEEL)	Part	QQ-S-766	///301//			1.0000	
8797926	PRIMER #209	Component	COMMERCIAL				1.0000	
8797926*1	CUP PRIMER (BRS)	Part	COMMERCIAL	/260////			1.0000	
8797926*2	CUP BATTERY (STEEL)	Part	COMMERCIAL				1.0000	
8797926*3	ANVIL (STEEL)	Part	COMMERCIAL				1.0000	
8797926*3	ANVIL (BRS) (ALT)	Part	COMMERCIAL				1.0000	
8797926*4	FOIL DISC (BLEACHED KRAFT PAPER)	Part	COMMERCIAL				1.0000	
	PEP (PRIMER MIX #955)	Part			0.9000	GR	1.0000	0.00012900
	PB STYPHNATE (40.00%)	Compound	MIL-L-757					

USADACS - MIDAS DETAILED STRUCT FOR A MUNITION (LESS BULK ITEMS)

Nomenclature: SIGNAL ILLUM GRND M158
NSN: 1370007562591 DODIC: L306 Reported Weight: 1.1100 LB

DRAWING #	NOMENCLATURE	TYPE	SPECIFICATION	TGCS	-- REPORTED --- WEIGHT	UNIT	FACTOR	FACTORED WEIGHT(LB)
	PETN (5.00%)	Compound	MIL-P-387					
	BA NITRATE (30.00%)	Compound	MIL-B-162					
	SB SULFIDE (15.00%)	Compound	MIL-A-159					
	AL (6.00%)	Compound	COMMERCIAL					
	TETRACENE (4.00%)	Compound	MIL-T-46936					
4116-107	PKG FOR NSN 1370007562591	Component					1.0000	
7548414	CAN METAL (METAL CAN)	Part	MIL-C-10464	/1////			1.0000	
7548414*1	KEY (STEEL)	Part	ASTM-A109				1.0000	
7548414*2	SPACER (PADDING MATERIAL)	Part	MIL-P-13607	/1 OR 2////			1.0000	
7548414*3	LABEL (PAPER) (ALT)	Part	COMMERCIAL				1.0000	
7548415	BOX PACKING (WOOD)	Part	MIL-B-2427	/2//2//	13.0000	LB	0.0278	0.36140000
7548415*1	FILLER (FIBERBOARD)	Part	MIL-F-50449				0.0278	
4116/107	PALLET 40" X 48" (WOOD)	Part	MIL-P-15011	/I//1/I/	80.0000	LB	0.0012	0.09600000
8794342	SEAL METALLIC (PB ALLOY)	Part	QQ-L-201		0.0039	LB	1.0000	0.00390000
								0.52630500

USADACS - MIDAS DETAILED STRUCTURE FOR A MUNITION (LESS BULK ITEMS)

06/09/97

Nomenclature: SIGNAL ILLUM GRND M159

NSN: 1370007562588 DODIC: L307 Reported Weight: 1.1100 LB

DRAWING #	NOMENCLATURE	TYPE	SPECIFICATION	TGCS	-- REPORTED --- WEIGHT	UNIT	FACTOR	FACTORED WEIGHT(LB)
8797920-2	SIGNAL ILLUM GRND M159	Munition	MIL-S-13261		1.1100	LB	1.0000	
8797929	BARREL ROCKET (AL ALLOY)	Part	QQ-A-225/1				1.0000	
	PEP (BLACK PWDR CL 5)	Part	MIL-P-223	///5//	750.0000	MG	1.0000	0.00165400
	K NITRATE (74.00%)	Compound	MIL-P-156	///1//				
	S (10.40%)	Compound	MIL-S-14929					
	CHARCOAL (15.60%)	Compound	JAN-C-178	///1//				
8797937	WASHER BARREL ROCKET (WOOL FELT)	Part	C-F-206	/1/12R3///			1.0000	
8797927	WASHER RETAINING (CHIPBOARD)	Part	UU-C-282				1.0000	
9235026	PLATE EXHAUST (STAINLESS STEEL)	Part	ASTM-A582	/416////			1.0000	
9235026	PLATE EXHAUST (STAINLESS STEEL) (ALT)	Part	QQ-S-763	/410////			1.0000	
8797936	SPACER PROP (KRAFT PAPER)	Part	UU-P-268	//A///			1.0000	
8797921	TUBE CASING (STAINLESS TUBING)	Part	MIL-T-8606	/1 AND 2////			1.0000	
8797921	TUBE CASING (STAINLESS STEEL) (ALT)	Part	ASTM-A269				1.0000	
9328587	PROP SPACER SLOTTED (KRAFT PAPER)	Part	UU-P-268	/A////			1.0000	
8797928	BOLT (STAINLESS STEEL)	Part	ASTM-A484	//416///			1.0000	
8797928	BOLT (STAINLESS STEEL) (ALT)	Part	QQ-S-763	///410//			1.0000	
8797925	WASHER BACKING (HARDBOARD)	Part	LLL-B-810	/1////			1.0000	
8797922	SEAL BARREL ROCKET (CORK)	Part	HH-C-576	///2//			1.0000	
8797923	SEAL (CORK)	Part	HH-C-576	///2//			1.0000	
8797931-7	LABEL (PAPER PRESSURE SENSITIVE)	Part	COMMERCIAL				1.0000	
	PEP (BLACK PWDR CL 5)	Part	MIL-P-223	///5//	750.0000	MG	1.0000	0.00165400
	K NITRATE (74.00%)	Compound	MIL-P-156	///1//				
	S (10.40%)	Compound	MIL-S-14929					
	CHARCOAL (15.60%)	Compound	JAN-C-178	///1//				
8797961	SIGNAL BODY & DELAY ASSY	Component	ANSI Y14.5-1982				1.0000	
8797963	BODY SIGNAL (AL ALLOY)	Part	QQ-A-225/1				1.0000	
9251412	DELAY ASSY	Component					1.0000	
9251411	HOUSING DELAY (AL ALLOY)	Part	QQ-A-225/5				1.0000	
9251411	HOUSING DELAY (AL ALLOY) (ALT)	Part	QQ-A-225/60				1.0000	
	PEP (FLASH COMP)	Part			90.0000	MG	1.0000	0.00019800
	ZR (58.00%)	Compound	MIL-Z-399	/2//1//				
	CR OXIDE (16.00%)	Compound	J5350					
	MO TRIOXIDE (25.00%)	Compound	MIL-M-48146					
	VINYL ALCOHOL (1.00%)	Compound	MIL-V-50433					
	PEP (IGN COMP MIX) (ALT)	Part	9206942		80.0000	MG	1.0000	
	B (25.00%)	Compound	MIL-B-51092	/1////				
	K PERCHLORATE (75.00%)	Compound	MIL-P-217	//A/4//				
	PEP (BLACK PWDR CL 7) (ALT)	Part	MIL-P-223	///7//	140.0000	MG	1.0000	
	K NITRATE (74.00%)	Compound	MIL-P-156	///A//				
	S (10.40%)	Compound	MIL-S-14929	/1/COMM.///				
	CHARCOAL (15.60%)	Compound	JAN-C-178	//A///				
	PEP (DELAY COMP)	Part	9251412		570.0000	MG	1.0000	0.00125700
	VINYL ALCOH ACETATE (0.30%)	Compound	MIL-V-50433					
	K PERCHLORATE (11.40%)	Compound	MIL-P-217	//A/4//				
	BA CHROMATE (56.30%)	Compound	MIL-B-550	//C///				
	W (32.00%)	Compound	MIL-T-48140	/1////				
8839489-2	ILLUMINANT ASSY WHT STAR CLUSTER	Component					5.0000	
8797957	TUBE STAR (KRAFT PAPER)	Part	UU-P-268	//A///			1.0000	
8797957	TUBE STAR (BOXBOARD) (ALT)	Part	MIL-B-20467				1.0000	
	PEP (ILLUM COMP WHT (MG 30/50 TP1))	Part			0.7500	OZ	1.0000	0.23437500
	MG 30/50 (29.50%)	Compound	MIL-P-14067	/1////				
	BA NITRATE (49.00%)	Compound	MIL-B-162	///6//				

USADACS - MIDAS DETAILED STRUCTURE FOR A MUNITION (LESS BULK ITEMS)

Nomenclature: SIGNAL ILLUM GRND M159
NSN: 1370007562588 DODIC: L307 Reported Weight: 1.1100 LB

DRAWING #	NOMENCLATURE	TYPE	SPECIFICATION	TGCS	-- REPORTED --- WEIGHT	UNIT	FACTOR	FACTORED WEIGHT(LB)
	SR NITRATE (16.50%)	Compound	MIL-S-20322	//B///				
	LAMINAC (4.89%)	Compound	COMMERCIAL	/4116////				
	LUPERSOL DDM (0.08%)	Compound	COMMERCIAL					
	CO NAPTHENATE (0.03%)	Compound	COMMERCIAL					
	PEP (ILLUM COMP WHT (MG 30/50 TP3)) (ALT)	Part			0.7500	OZ	1.0000	
	MG 30/50 (29.50%)	Compound	MIL-M-382	/3////				
	BA NITRATE (49.00%)	Compound	MIL-B-162	///6//				
	SR NITRATE (16.50%)	Compound	MIL-S-20322	//B///				
	LAMINAC (4.89%)	Compound	COMMERCIAL	/4116////				
	LUPERSOL DDM (0.08%)	Compound	COMMERCIAL					
	CO NAPTHENATE (0.03%)	Compound	COMMERCIAL					
	PEP (ILLUM COMP WHT (MG 30/50 TP4)) (ALT)	Part			0.7500	OZ	1.0000	
	MG 30/50 (29.50%)	Compound	MIL-P-14067	/4////				
	BA NITRATE (49.00%)	Compound	MIL-B-162	///6//				
	SR NITRATE (16.50%)	Compound	MIL-S-20322	//B///				
	LAMINAC (4.89%)	Compound	COMMERCIAL	/4116////				
	LUPERSOL DDM (0.08%)	Compound	COMMERCIAL					
	CO NAPTHENATE (0.03%)	Compound	COMMERCIAL					
	PEP (PYRO 1ST FIRE COMP YLW)	Part	MIL-P-48240	/1////	2.0000	GR	1.0000	0.00143000
	BA NITRATE (50.00%)	Compound	MIL-B-162					
	TETRANITROCARBAZOLE (10.00%)	Compound	MIL-T-13723					
	SI PWDR (20.00%)	Compound	MIL-S-230					
	ZR HYDRIDE (15.00%)	Compound	COMMERCIAL					
	LUPERSOL/LAMINAC (5.00%)	Compound	COMMERCIAL					
	PEP (QUICKMATCH MIX)	Part	MIL-Q-378	/2//A//	2.0000	GR	1.0000	0.00143000
	COTTON WICK (0.00%)	Compound	COMMERCIAL					
	K NITRATE (74.00%)	Compound	MIL-P-156					
	CHARCOAL (15.60%)	Compound	JAN-C-178					
	S (10.40%)	Compound	JAN-S-487					
8797947	TAIL ASSY	Component	ANSI Y14.5M-82				1.0000	
8797948	RING UPPER TAIL (STAINLESS TUBING)	Part	MIL-T-8606				1.0000	
8797948	RING UPPER TAIL (STAINLESS TUBING) (ALT)	Part	MIL-T-8606	/2////			1.0000	
8797949	RING LOWER TAIL (STAINLESS TUBING)	Part	MIL-T-8606				1.0000	
8797949	RING LOWER TAIL (STAINLESS TUBING) (ALT)	Part	MIL-T-8606	/2////			1.0000	
8797950	TAILVANE & RIB ASSY	Component	AWS A2.0				4.0000	
8797951	VANE TAIL (STEEL)	Part	COMMERCIAL	/420////			1.0000	
8797951	VANE TAIL (STEEL) (ALT)	Part	COMMERCIAL	/410////			1.0000	
8797952	RIB TAIL (STAINLESS STEEL)	Part	QQ-S-766	///304//			1.0000	
8887530	PROPELLANT ASSY	Component	ANSI Y14.5-1973				1.0000	
8887529	GRAIN PROP (BLACK PWDR MIX)	Part			13.0000	GM	1.0000	0.02866500
	K NITRATE (67.40%)	Compound	MIL-P-156					
	S (9.50%)	Compound	MIL-S-14929					
	CHARCOAL (14.20%)	Compound	MIL-C-178					
	CA CARBONATE (8.90%)	Compound	MIL-C-293					
8797945	SHEATH (KRAFT PAPER)	Part	UU-P-268	//B///			1.0000	
8797941	PROTECTOR ASSY	Component					1.0000	
8797942	BLOCK PROTECTOR (WOOD)	Part	MIL-L-736				1.0000	
8797943	PROTECTOR RUBBER (RUBBER)	Part	MIL-R-3065	/R/400/RS//			1.0000	
8797938	WASHER & DISC ASSY	Component					1.0000	
8797939	WASHER (HARDBOARD)	Part	ANSI A135.4				1.0000	
8797940	DISC (TISSUE PAPER)	Part	COMMERCIAL	/16 OR 18////			1.0000	
8797940	DISC (TISSUE PAPER) (ALT)	Part	COMMERCIAL	/18 LB////			1.0000	
8797959	WASHER DISC ASSY	Component					1.0000	

USADACS - MIDAS DETAILED STRUCTURE FOR A MUNITION (LESS BULK ITEMS)

06/09/97

Nomenclature: SIGNAL ILLUM GRND M159

NSN: 1370007562588 DODIC: L307 Reported Weight: 1.1100 LB

DRAWING #	NOMENCLATURE	TYPE	SPECIFICATION	TGCS	-- REPORTED --- WEIGHT	UNIT	FACTOR	FACTORED WEIGHT(LB)
8797959	DISC LOWER (PAPER ONIONSKIN)	Part	MIL-P-157				1.0000	
8797960	WASHER UPPER (WOOL FELT)	Part	C-F-206	/1//12R3//			1.0000	
8797953	FIRING CAP & SPRING CLIP ASSY	Component					1.0000	
8797955	CAP FIRING (AL ALLOY)	Part	ANSI Y14.5M-198				1.0000	
8797954	PIN FIRING (STEEL)	Part	QQ-S-637	/1117////			1.0000	
8839487	RIVET FLAT HEAD (AL ALLOY)	Part	MS20470	/1100////			1.0000	
8839486	CLIP SPRING (STAINLESS STEEL)	Part	QQ-S-766	///301//			1.0000	
8797926	PRIMER #209	Component	COMMERCIAL				1.0000	
8797926*1	CUP PRIMER (BRS)	Part	COMMERCIAL	/260////			1.0000	
8797926*2	CUP BATTERY (STEEL)	Part	COMMERCIAL				1.0000	
8797926*3	ANVIL (STEEL)	Part	COMMERCIAL				1.0000	
8797926*3	ANVIL (BRS) (ALT)	Part	COMMERCIAL				1.0000	
8797926*4	FOIL DISC (BLEACHED KRAFT PAPER)	Part	COMMERCIAL				1.0000	
	PEP (PRIMER MIX #955)	Part			0.9000	GR	1.0000	0.00012900
	PB STYPHNATE (40.00%)	Compound	MIL-L-757					
	PETN (5.00%)	Compound	MIL-P-387					
	BA NITRATE (30.00%)	Compound	MIL-B-162					
	SB SULFIDE (15.00%)	Compound	MIL-A-159					
	AL (6.00%)	Compound	COMMERCIAL					
	TETRACENE (4.00%)	Compound	MIL-T-46936					
4116-107	PKG FOR NSN 1370007562588	Component					1.0000	
7548414	CAN METAL (METAL CAN)	Part	MIL-C-10464	/1////			1.0000	
7548414*1	KEY (STEEL)	Part	ASTM-A109				1.0000	
7548414*2	SPACER (PADDING MATERIAL)	Part	MIL-P-13607	/1 OR 2////			1.0000	
7548414*3	LABEL (PAPER)	Part	COMMERCIAL				1.0000	
7548415	BOX PACKING (WOOD)	Part	MIL-B-2427	/2//2//	13.0000	LB	0.0280	0.36400000
7548415*1	FILLER (FIBERBOARD)	Part	MIL-F-50449				0.0280	
8794342	SEAL METALLIC (PB ALLOY)	Part	QQ-L-201		0.0039	LB	0.0280	0.00010920
4116/107	PALLET 40" X 48" (WOOD)	Part	MIL-P-15011	/I//1/I/	80.0000	LB	0.0010	0.08000000
								0.71490120

MIDAS: Detailed Structure L311

Nomenclature: SIGNAL ILLUM GRND RED STAR PARA M126
NSN: 1370006292336
DODIC: L311
Drawing #: 8797968
Family: FP
Reported weight: 1.2000 LB
Specification:
Remarks:

#	Type	Drawing#	*Nomenclature	Weight
*1	*Munition	*8797968	SIGNAL ILLUM GRND RED STAR PARA M126	*1.20 LB
*2	*Component	*8797958	--WASHER DISC ASSY	*0.00
*3	*Part	*8797959	----DISC LOWER (PAPER ONIONSKIN)	*0.00
*4	*Bulk item	*	------LABEL ADHESIVE	
*5	*Bulk item	*	------ADHESIVE (ALT)	
*6	*Part	*8797960	----WASHER UPPER (WOOL FELT)	*0.00
*7	*Bulk item	*	------LABEL ADHESIVE	
*8	*Bulk item	*	------ADHESIVE (ALT)	
*9	*Component	*8887530	--PROPELLANT ASSY	*0.00
*10	*Part	*8887529	----GRAIN PROP (BLACK PWDR MIX)	*13.00 GM
*11	*Compound	*	------K NITRATE (67.40%)	
*12	*Compound	*	------S (9.50%)	
*13	*Compound	*	------CHARCOAL (14.20%)	
*14	*Compound	*	------CA CARBONATE (8.90%)	
*15	*Bulk item	*	------PETTMAN CEMENT	
*16	*Part	*8797945	----SHEATH (KRAFT PAPER)	*0.00
*17	*Bulk item	*	------PETTMAN CEMENT	
*18	*Bulk item	*	------STENCIL INK	
*19	*Bulk item	*	------STENCIL INK (ALT)	
*20	*Component	*8797938	--WASHER & DISC ASSY	*0.00
*21	*Part	*8797939	----WASHER (HARDBOARD)	*0.00
*22	*Bulk item	*	------LABEL ADHESIVE	
*23	*Bulk item	*	------ADHESIVE (ALT)	
*24	*Part	*8797940	----DISC (TISSUE PAPER)	*0.00
*25	*Bulk item	*	------LABEL ADHESIVE	
*26	*Bulk item	*	------ADHESIVE (ALT)	
*27	*Part	*8797940	----DISC (TISSUE PAPER) (ALT)	*0.00
*28	*Bulk item	*	------LABEL ADHESIVE	
*29	*Bulk item	*	------ADHESIVE (ALT)	

*30	*Component	*8797991	--PARACHUTE ASSY	*0.00
*31	*Part	*8797991*1	----SHROUD (COTTON TWINE)	*0.00
*32	*Part	*8797991*2	----SUSPENSION CORD (ASBESTOS)	*0.00
*33	*Part	*8797994	----PARACHUTE (SILK CLOTH)	*0.00
*34	*Bulk item	*	------TALC	
*35	*Part	*8797994	----PARACHUTE (NYLON CLOTH) (ALT)	*0.00
*36	*Bulk item	*	------TALC	
*37	*Component	*8797953	--FIRING CAP & SPRING CLIP ASSY	*0.00
*38	*Part	*8797955	----CAP FIRING (AL ALLOY)	*0.00
*39	*Part	*8797954	----PIN FIRING (STEEL)	*0.00
*40	*Bulk item	*	------CD CHROMATE	
*41	*Bulk item	*	------ZN CHROMATE (ALT)	
*42	*Part	*8839487	----RIVET FLAT HEAD (AL ALLOY)	*0.00
*43	*Part	*8839486	----CLIP SPRING (STAINLESS STEEL)	*0.00
*44	*Component	*8797941	--PROTECTOR ASSY	*0.00
*45	*Part	*8797942	----BLOCK PROTECTOR (WOOD)	*0.00
*46	*Bulk item	*	------ADHESIVE SYNTHETIC RUBBER	
*47	*Bulk item	*	------ADHESIVE PLIOBOND (ALT)	
*48	*Part	*8797943	----PROTECTOR RUBBER (RUBBER)	*0.00
*49	*Bulk item	*	------ADHESIVE SYNTHETIC RUBBER	
*50	*Bulk item	*	------ADHESIVE PLIOBOND (ALT)	
*51	*Component	*8797961	--SIGNAL BODY & DELAY ASSY	*0.00
*52	*Part	*8797963	----BODY SIGNAL (AL ALLOY)	*0.00
*53	*Bulk item	*	------LACQUER CELL NITRATE	
*54	*Bulk item	*	------STENCIL INK	
*55	*Component	*9251412	----DELAY ASSY	*0.00
*56	*Part	*9251411	------HOUSING DELAY (AL ALLOY)	*0.00
*57	*Part	*9251411	------HOUSING DELAY (AL ALLOY) (ALT)	*0.00
*58	*Part	*	------PEP (FLASH COMP)	*90.00 MG
*59	*Compound	*	--------ZR (58.00%)	
*60	*Compound	*	--------CR OXIDE (16.00%)	
*61	*Compound	*	--------MO TRIOXIDE (25.00%)	
*62	*Compound	*	--------VINYL ALCOHOL (1.00%)	
*63	*Part	*	------PEP (IGN COMP MIX) (ALT)	*80.00 MG
*64	*Compound	*	--------B AMORPHOUS PWDR (25.00%)	
*65	*Compound	*	--------K PERCHLORATE (75.00%)	
*66	*Part	*	------PEP (BLACK PWDR CL 7) (ALT)	140.00 MG
*67	*Compound	*	--------K NITRATE (74.00%)	
*68	*Compound	*	--------S (10.40%)	
*69	*Compound	*	--------CHARCOAL (15.60%)	

*70	*Part	*	------PEP (DELAY COMP)	570.00 MG
*71	*Compound	*	--------VINYL ALCOHOL (0.30%)	
*72	*Compound	*	--------K PERCHLORATE (11.40%)	
*73	*Compound	*	--------BA CHROMATE (56.30%)	
*74	*Compound	*	--------W (32.00%)	
*75	*Component	*8797926	--PRIMER #209	*0.00
*76	*Part	*8797926*1	----CUP PRIMER (BRASS)	*0.00
*77	*Bulk item	*	------NI PLATING	
*78	*Part	*8797926*2	----CUP BATTERY (STEEL)	*0.00
*79	*Bulk item	*	------CU PLATING	
*80	*Part	*8797926*3	----ANVIL (STEEL)	*0.00
*81	*Bulk item	*	------CU PLATING	
*82	*Part	*8797926*3	----ANVIL (BRASS) (ALT)	*0.00
*83	*Bulk item	*	------CU PLATING	
*84	*Part	*8797926*4	----FOIL DISC (BLEACHED KRAFT PAPER)	*0.00
*85	*Part	*	----PEP (PRIMER MIX #955)	*0.90 GR
*86	*Compound	*	------PB STYPHNATE (40.00%)	
*87	*Compound	*	------PETN (5.00%)	
*88	*Compound	*	------BA NITRATE (30.00%)	
*89	*Compound	*	------SB SULFIDE (15.00%)	
*90	*Compound	*	------AL PWDR (6.00%)	
*91	*Compound	*	------TETRACENE (4.00%)	
*92	*Component	*8797947	--TAIL ASSY	*0.00
*93	*Part	*8797948	----RING UPPER TAIL (STAINLESS TUBING)	*0.00
*94	*Part	*8797948	----RING UPPER TAIL (STAINLESS TUBING) (ALT)	*0.00
*95	*Part	*8797949	----RING LOWER TAIL (STAINLESS TUBING)	*0.00
*96	*Part	*8797949	----RING LOWER TAIL (STAINLESS TUBING) (ALT)	*0.00
*97	*Component	*8797950	----TAILVANE & RIB ASSY	*0.00
*98	*Part	*8797951	------VANE TAIL (STEEL)	*0.00
*99	*Part	*8797951	------VANE TAIL (STEEL) (ALT)	*0.00
*100	*Part	*8797952	------RIB TAIL (STAINLESS STEEL)	*0.00
*101	*Component	*9328576	--ILLUMINANT ASSY RED STAR M126A1	*0.00
*102	*Part	*8797980	----CASE DISC (CHIPBOARD)	*0.00
*103	*Part	*	----PEP (ILLUMINANT COMP 1*1)	*90.00 GM
*104	*Compound	*	------MG PWDR 30/50 (66.00%)	
*105	*Compound	*	------NA NITRATE (29.00%)	
*106	*Compound	*	------LAMINAC (4.98%)	
*107	*Compound	*	------CO NAPHTHENATE (0.02%)	
*108	*Part	*9295009	----TUBE ILLUMINANT (KRAFT PAPER)	215.70 GM
*109	*Bulk item	*	------ADHESIVE DEXTRIN	

*110	*Bulk item	*	------STENCIL INK	
*111	*Bulk item	*	------INK MARKING (9211788)	
*112	*Part	*	----PEP (PYRO 1ST FIRE COMP YLW)	*87.14 GR
*113	*Compound	*	------BA NITRATE (50.00%)	
*114	*Compound	*	------TETRANITROCARBAZOLE (10.00%)	
*115	*Compound	*	------SI (20.00%)	
*116	*Compound	*	------ZR HYDRIDE (15.00%)	
*117	*Compound	*	------LAMINAC/LUPERSOL (5.00%)	
*118	*Component	*8797988	----ANCHOR ASSY	*0.00
*119	*Part	*8797979	------ANCHOR DISC (STEEL)	*4.57 GM
*120	*Bulk item	*	--------CD CHROMATE	
*121	*Part	MS24665-281	------COTTER PIN (STEEL) (ALT)	*0.00
*122	*Bulk item	*	--------CD CHROMATE	
*123	*Bulk item	*	--------ZN PHOSPHATE (ALT)	
*124	*Component	*9328576*1	----QUICKMATCH	*0.01 OZ
*125	*Part	*	------PEP (BLACK PWDR)	*4.07 GR
*126	*Compound	*	--------K NITRATE (74.00%)	
*127	*Compound	*	--------CHARCOAL (15.60%)	
*128	*Compound	*	--------S (10.40%)	
*129	*Part	*9295010*1A	------COTTON WICK (COTTON THREAD)	*0.30 GR
*130	*Bulk item	*	--------STARCH	

USADACS - MIDAS DETAILED STRUCTURE FOR A MUNITION (LESS BULK ITEMS)

06/09/97

Nomenclature: SIGNAL ILLUM GRND M127

NSN: 1370007531859 DODIC: L312 Reported Weight: Not reported

DRAWING #	NOMENCLATURE	TYPE	SPECIFICATION	TGCS	-- REPORTED --- WEIGHT	UNIT	FACTOR	FACTORED WEIGHT(LB)
8797968	SIGNAL ILLUM GRND M127	Munition					1.0000	
8797931	LABEL (PAPER PRESSURE SENSITIVE)	Part	COMMERCIAL				1.0000	
8797937	WASHER BARREL ROCKET (WOOL FELT)	Part	C-F-206	/1//12R3//			1.0000	
8797927	WASHER RETAINING (CHIPBOARD)	Part	UU-C-282				1.0000	
9328587	PROP SPACER SLOTTED (KRAFT PAPER)	Part	UU-P-268	/A////			1.0000	
8797970	UPPER DISC (HAIR FELT)	Part	C-F-202	/4//2//			1.0000	
MS24665-132	COTTER PIN (STEEL)	Part	ANSI B18.8.1				1.0000	
8797923	SEAL (CORK)	Part	HH-C-576	///2//			1.0000	
8797921	TUBE CASING (STAINLESS STEEL)	Part	ASTM-A269				1.0000	
8797921	TUBE CASING (STAINLESS TUBING) (ALT)	Part	MIL-T-8606	/1 AND 2////			1.0000	
8797936	SPACER PROP (KRAFT PAPER)	Part	UU-P-268	//A///			1.0000	
9235026	PLATE EXHAUST (STAINLESS STEEL)	Part	ASTM-A582	/416////			1.0000	
9235026	PLATE EXHAUST (STAINLESS STEEL) (ALT)	Part	QQ-S-763	/410////			1.0000	
8797929	BARREL ROCKET (AL ALLOY)	Part	QQ-A-225/1				1.0000	
8797928	BOLT (STAINLESS STEEL)	Part	ASTM-A484	///416//			1.0000	
8797928	BOLT (STAINLESS STEEL) (ALT)	Part	QQ-S-763	///410//			1.0000	
8797922	SEAL BARREL ROCKET (CORK)	Part	HH-C-576	///2//			1.0000	
	PEP (BLACK PWDR CL 5)	Part	MIL-P-223	///5//	1460.0000	MG	1.0000	0.00321900
	K NITRATE (74.00%)	Compound	MIL-P-156	///1//				
	S (10.40%)	Compound	MIL-S-14929					
	CHARCOAL (15.60%)	Compound	JAN-C-178	///1//				
8797958	WASHER DISC ASSY	Component					1.0000	
8797959	DISC LOWER (PAPER ONIONSKIN)	Part	MIL-P-157				1.0000	
8797960	WASHER UPPER (WOOL FELT)	Part	C-F-206	/1//12R3//			1.0000	
8887530	PROPELLANT ASSY	Component	ANSI Y14.5-1973				1.0000	
8887529	GRAIN PROP (BLACK PWDR MIX)	Part			13.0000	GM	1.0000	0.02866500
	K NITRATE (67.40%)	Compound	MIL-P-156					
	S (9.50%)	Compound	MIL-S-14929					
	CHARCOAL (14.20%)	Compound	MIL-C-178					
	CA CARBONATE (8.90%)	Compound	MIL-C-293					
8797945	SHEATH (KRAFT PAPER)	Part	UU-P-268	//B///			1.0000	
8797938	WASHER & DISC ASSY	Component					1.0000	
8797939	WASHER (HARDBOARD)	Part	ANSI A135.4				1.0000	
8797940	DISC (TISSUE PAPER)	Part	COMMERCIAL	/16 OR 18////			1.0000	
8797940	DISC (TISSUE PAPER) (ALT)	Part	COMMERCIAL	/18 LB////			1.0000	
8797991	PARACHUTE ASSY	Component					1.0000	
8797991*1	SHROUD (COTTON TWINE)	Part	T-T-881				8.0000	
8797991*2	SUSPENSION CORD (ASBESTOS)	Part	COMMERCIAL				1.0000	
8797994	PARACHUTE (SILK CLOTH)	Part	MIL-C-3761	///2//			1.0000	
8797994	PARACHUTE (NYLON CLOTH) (ALT)	Part	MIL-C-498	/D////			1.0000	
8797953	FIRING CAP & SPRING CLIP ASSY	Component					1.0000	
8797955	CAP FIRING (AL ALLOY)	Part	ANSI Y14.5M-198				1.0000	
8797954	PIN FIRING (STEEL)	Part	QQ-S-637	/1117////			1.0000	
8839487	RIVET FLAT HEAD (AL ALLOY)	Part	MS20470	/1100////			1.0000	
8839486	CLIP SPRING (STAINLESS STEEL)	Part	QQ-S-766	///301//			1.0000	
8797941	PROTECTOR ASSY	Component					1.0000	
8797942	BLOCK PROTECTOR (WOOD)	Part	MIL-L-736				1.0000	
8797943	PROTECTOR RUBBER (RUBBER)	Part	MIL-R-3065	/R/400/RS//			1.0000	
8797961	SIGNAL BODY & DELAY ASSY	Component	ANSI Y14.5-1982				1.0000	
8797963	BODY SIGNAL (AL ALLOY)	Part	QQ-A-225/1				1.0000	
9251412	DELAY ASSY	Component					1.0000	
9251411	HOUSING DELAY (AL ALLOY)	Part	QQ-A-225/5				1.0000	

USADACS - MIDAS DETAILED STRUCTURE FOR A MUNITION (LESS BULK ITEMS)

06/09/97

Nomenclature: SIGNAL ILLUM GRND M127

NSN: 1370007531859 DODIC: L312 Reported Weight: Not reported

DRAWING #	NOMENCLATURE	TYPE	SPECIFICATION	TGCS	-- REPORTED --- WEIGHT	UNIT	FACTOR	FACTORED WEIGHT(LB)
9251411	HOUSING DELAY (AL ALLOY) (ALT)	Part	QQ-A-225/60				1.0000	
	PEP (FLASH COMP)	Part			90.0000	MG	1.0000	0.00019800
	ZR (58.00%)	Compound	MIL-Z-399	/2//1//				
	CR OXIDE (16.00%)	Compound	J5350					
	MO TRIOXIDE (25.00%)	Compound	MIL-M-48146					
	VINYL ALCOHOL (1.00%)	Compound	MIL-V-50433					
	PEP (IGN COMP MIX) (ALT)	Part	9206942		80.0000	MG	1.0000	
	B (25.00%)	Compound	MIL-B-51092	/1////				
	K PERCHLORATE (75.00%)	Compound	MIL-P-217	//A/4//				
	PEP (BLACK PWDR CL 7) (ALT)	Part	MIL-P-223	///7//	140.0000	MG	1.0000	
	K NITRATE (74.00%)	Compound	MIL-P-156	///A//				
	S (10.40%)	Compound	MIL-S-14929	/1/COMM.///				
	CHARCOAL (15.60%)	Compound	JAN-C-178	//A///				
	PEP (DELAY COMP)	Part	9251412		570.0000	MG	1.0000	0.00125700
	VINYL ALCOH ACETATE (0.30%)	Compound	MIL-V-50433					
	K PERCHLORATE (11.40%)	Compound	MIL-P-217	//A/4//				
	BA CHROMATE (56.30%)	Compound	MIL-B-550	//C///				
	W (32.00%)	Compound	MIL-T-48140	/1////				
9295010	ILLUMINANT ASSY WHT STAR M127A1	Component					1.0000	
8797980	CASE DISC (CHIPBOARD)	Part	UU-C-282	///1//			1.0000	
9295009	TUBE ILLUMINANT (KRAFT PAPER)	Part	UU-P-268	/1/A///	215.7000	GM	1.0000	0.47561900
	PEP (PYRO 1ST FIRE COMP YLW)	Part	MIL-P-48240	/1////	2.0000	GR	1.0000	0.00028600
	BA NITRATE (50.00%)	Compound	MIL-B-162					
	TETRANITROCARBAZOLE (10.00%)	Compound	MIL-T-13723					
	SI PWDR (20.00%)	Compound	MIL-S-230					
	ZR HYDRIDE (15.00%)	Compound	COMMERCIAL					
	LUPERSOL/LAMINAC (5.00%)	Compound	COMMERCIAL					
	PEP (ILLUMINANT COMP 1*1)	Part	9295010		85.0000	GM	1.0000	0.18742500
	MG 30/50 (66.00%)	Compound	MIL-P-14067	/1 OR 4////				
	NA NITRATE (29.00%)	Compound	9216973					
	LAMINIC 4116 (4.98%)	Compound	COMMERCIAL					
	CO NAPHTENATE (0.02%)	Compound	COMMERICAL					
	PEP (ILLUMINANT COMP 1*2) (ALT)	Part	9295010		85.0000	GM	1.0000	
	MG PWDR (66.00%)	Compound	MIL-M-382	/3////				
	LAMINIC 4116 (4.98%)	Compound	COMMERCIAL					
	CO NAPTHENATE (0.02%)	Compound	COMMERCIAL					
	NA NITRATE (29.00%)	Compound	9216973					
	PEP (ILLUMINANT COMP 2*1) (ALT)	Part	9295010		85.0000	GM	1.0000	
	MG 30/50 (65.00%)	Compound	MIL-P-14067	/1 OR 4////				
	NA NITRATE (31.00%)	Compound	9216973					
	VINYL ALCOHOL ACETAT (4.00%)	Compound	MIL-V-50433					
	PEP (ILLUMINANT COMP 2*2) (ALT)	Part	9295010		85.0000	GM	1.0000	
	MG PWDR (65.00%)	Compound	MIL-M-382	/3////				
	VINYL ALCOHOL ACETAT (4.00%)	Compound	MIL-V-50433					
	NA NITRATE (31.00%)	Compound	9216973					
8797988	ANCHOR ASSY	Component					1.0000	
8797979	ANCHOR DISC (STEEL)	Part	QQ-S-698		4.5680	GM	1.0000	0.01007200
MS24665-281	COTTER PIN (STEEL) (ALT)	Part	ANSI B81.8.1				1.0000	
9295010*1	QUICKMATCH	Component	MIL-Q-378		0.0100	OZ	1.0000	
	PEP (BLACK PWDR)	Part	COMMERCIAL		4.0700	GR	1.0000	0.00058100
	K NITRATE (74.00%)	Compound	MIL-P-156					
	CHARCOAL (15.60%)	Compound	JAN-C-178					
	S (10.40%)	Compound	JAN-S-487	//A///				

USADACS - MIDAS DETAILED STRUCTURE FOR A MUNITION (LESS BULK ITEMS)

Nomenclature: SIGNAL ILLUM GRND M127
NSN: 1370007531859 DODIC: L312 Reported Weight: Not reported

DRAWING #	NOMENCLATURE	TYPE	SPECIFICATION	TGCS	-- REPORTED --- WEIGHT	UNIT	FACTOR	FACTORED WEIGHT(LB)
9295010*1A	COTTON WICK (COTTON THREAD)	Part	COMMERCIAL		0.3050	GR	1.0000	0.00004400
8797926	PRIMER #209	Component	COMMERCIAL				1.0000	
8797926*1	CUP PRIMER (BRS)	Part	COMMERCIAL	/260////			1.0000	
8797926*2	CUP BATTERY (STEEL)	Part	COMMERCIAL				1.0000	
8797926*3	ANVIL (STEEL)	Part	COMMERCIAL				1.0000	
8797926*3	ANVIL (BRS) (ALT)	Part	COMMERCIAL				1.0000	
8797926*4	FOIL DISC (BLEACHED KRAFT PAPER)	Part	COMMERCIAL				1.0000	
	PEP (PRIMER MIX #955)	Part			0.9000	GR	1.0000	0.00012900
	PB STYPHNATE (40.00%)	Compound	MIL-L-757					
	PETN (5.00%)	Compound	MIL-P-387					
	BA NITRATE (30.00%)	Compound	MIL-B-162					
	SB SULFIDE (15.00%)	Compound	MIL-A-159					
	AL (6.00%)	Compound	COMMERCIAL					
	TETRACENE (4.00%)	Compound	MIL-T-46936					
8797947	TAIL ASSY	Component	ANSI Y14.5M-82				1.0000	
8797948	RING UPPER TAIL (STAINLESS TUBING)	Part	MIL-T-8606				1.0000	
8797948	RING UPPER TAIL (STAINLESS TUBING) (ALT)	Part	MIL-T-8606	/2////			1.0000	
8797949	RING LOWER TAIL (STAINLESS TUBING)	Part	MIL-T-8606				1.0000	
8797949	RING LOWER TAIL (STAINLESS TUBING) (ALT)	Part	MIL-T-8606	/2////			1.0000	
8797950	TAILVANE & RIB ASSY	Component	AWS A2.0				4.0000	
8797951	VANE TAIL (STEEL)	Part	COMMERCIAL	/420////			1.0000	
8797951	VANE TAIL (STEEL) (ALT)	Part	COMMERCIAL	/410////			1.0000	
8797952	RIB TAIL (STAINLESS STEEL)	Part	QQ-S-766	///304//			1.0000	
								0.70749500

USADACS - MIDAS DETAILED STRUCTURE FOR A MUNITION (LESS BULK ITEMS)

06/09/97

Nomenclature: SIGNAL ILLUM GRND M125A1

NSN: 1370006292335 DODIC: L314 Reported Weight: 1.1100 LB

DRAWING #	NOMENCLATURE	TYPE	SPECIFICATION	TGCS	-- REPORTED --- WEIGHT	UNIT	FACTOR	FACTORED WEIGHT(LB)
8797920	SIGNAL ILLUM GRND M125A1	Munition	MIL-S-13261		1.1100	LB	1.0000	
8797929	BARREL ROCKET (AL ALLOY)	Part	QQ-A-225/1				1.0000	
	PEP (BLACK PWDR CL 5)	Part	MIL-P-223	///5//	750.0000	MG	1.0000	0.00165400
	K NITRATE (74.00%)	Compound	MIL-P-156	///1//				
	S (10.40%)	Compound	MIL-S-14929					
	CHARCOAL (15.60%)	Compound	JAN-C-178	///1//				
8797937	WASHER BARREL ROCKET (WOOL FELT)	Part	C-F-206	/1/12R3///			1.0000	
8797927	WASHER RETAINING (CHIPBOARD)	Part	UU-C-282				1.0000	
9235026	PLATE EXHAUST (STAINLESS STEEL)	Part	ASTM-A582	/416////			1.0000	
9235026	PLATE EXHAUST (STAINLESS STEEL) (ALT)	Part	QQ-S-763	/410////			1.0000	
8797936	SPACER PROP (KRAFT PAPER)	Part	UU-P-268	//A///			1.0000	
8797921	TUBE CASING (STAINLESS TUBING)	Part	MIL-T-8606	/1 AND 2////			1.0000	
8797921	TUBE CASING (STAINLESS STEEL) (ALT)	Part	ASTM-A269				1.0000	
9328587	PROP SPACER SLOTTED (KRAFT PAPER)	Part	UU-P-268	/A////			1.0000	
8797928	BOLT (STAINLESS STEEL)	Part	ASTM-A484	//416///			1.0000	
8797928	BOLT (STAINLESS STEEL) (ALT)	Part	QQ-S-763	///410//			1.0000	
	PEP (BLACK PWDR CL 5)	Part	MIL-P-223	///5//	750.0000	MG	1.0000	0.00165400
	K NITRATE (74.00%)	Compound	MIL-P-156	///1//				
	S (10.40%)	Compound	MIL-S-14929					
	CHARCOAL (15.60%)	Compound	JAN-C-178	///1//				
8797925	WASHER BACKING (HARDBOARD)	Part	LLL-B-810	/1////			1.0000	
8797923	SEAL (CORK)	Part	HH-C-576	///2//			1.0000	
8797922	SEAL BARREL ROCKET (CORK)	Part	HH-C-576	///2//			1.0000	
8797931-1	LABEL (PAPER PRESSURE SENSITIVE)	Part	COMMERCIAL				1.0000	
8797961	SIGNAL BODY & DELAY ASSY	Component	ANSI Y14.5-1982				1.0000	
8797963	BODY SIGNAL (AL ALLOY)	Part	QQ-A-225/1				1.0000	
9251412	DELAY ASSY	Component					1.0000	
9251411	HOUSING DELAY (AL ALLOY)	Part	QQ-A-225/5				1.0000	
9251411	HOUSING DELAY (AL ALLOY) (ALT)	Part	QQ-A-225/60				1.0000	
	PEP (FLASH COMP)	Part			90.0000	MG	1.0000	0.00019800
	ZR (58.00%)	Compound	MIL-Z-399	/2//1//				
	CR OXIDE (16.00%)	Compound	J5350					
	MO TRIOXIDE (25.00%)	Compound	MIL-M-48146					
	VINYL ALCOHOL (1.00%)	Compound	MIL-V-50433					
	PEP (IGN COMP MIX) (ALT)	Part	9206942		80.0000	MG	1.0000	
	B (25.00%)	Compound	MIL-B-51092	/1////				
	K PERCHLORATE (75.00%)	Compound	MIL-P-217	//A/4//				
	PEP (BLACK PWDR CL 7) (ALT)	Part	MIL-P-223	///7//	140.0000	MG	1.0000	
	K NITRATE (74.00%)	Compound	MIL-P-156	///A//				
	S (10.40%)	Compound	MIL-S-14929	/1/COMM.///				
	CHARCOAL (15.60%)	Compound	JAN-C-178	//A///				
	PEP (DELAY COMP)	Part	9251412		570.0000	MG	1.0000	0.00125700
	VINYL ALCOH ACETATE (0.30%)	Compound	MIL-V-50433					
	K PERCHLORATE (11.40%)	Compound	MIL-P-217	//A/4//				
	BA CHROMATE (56.30%)	Compound	MIL-B-550	//C///				
	W (32.00%)	Compound	MIL-T-48140	/1////				
8797956	ILLUMINANT ASSY GRN STAR CLUSTER	Component					5.0000	
8797957	TUBE STAR (KRAFT PAPER)	Part	UU-P-268	//A///			1.0000	
8797957	TUBE STAR (BOXBOARD) (ALT)	Part	MIL-B-20467				1.0000	
	PEP (ILLUM COMP GRN(MG 30/50 TP 1))	Part			0.5000	OZ	1.0000	0.15625000
	MG 30/50 (33.00%)	Compound	MIL-P-14067	/1////				
	BA NITRATE (46.00%)	Compound	MIL-B-162	///6//				

USADACS - MIDAS DETAILED STRUCTURE FOR A MUNITION (LESS BULK ITEMS)

Nomenclature: SIGNAL ILLUM GRND M125A1
NSN: 1370006292335 DODIC: L314 Reported Weight: 1.1100 LB

DRAWING #	NOMENCLATURE	TYPE	SPECIFICATION	TGCS	-- REPORTED --- WEIGHT	UNIT	FACTOR	FACTORED WEIGHT(LB)
	POLYVINYL CHLORIDE (16.00%)	Compound	MIL-P-20307					
	LAMINAC (4.90%)	Compound	COMMERCIAL	/4116////				
	LUPERSOL DDM (0.08%)	Compound	COMMERCIAL					
	CO NAPTHENATE (0.03%)	Compound	COMMERCIAL					
	PEP (ILLUM COMP GRN(MG 30/50 TP 3)) (ALT)	Part			0.5000	OZ	1.0000	
	MG 30/50 (33.00%)	Compound	MIL-M-382	/3////				
	BA NITRATE (46.00%)	Compound	MIL-B-162	///6//				
	POLYVINYL CHLORIDE (16.00%)	Compound	MIL-P-20307					
	LAMINAC (4.89%)	Compound	COMMERCIAL	/4116////				
	LUPERSOL DDM (0.08%)	Compound	COMMERCIAL					
	CO NAPTHENATE (0.03%)	Compound	COMMERCIAL					
	PEP (ILLUM COMP GRN(MG 30/50 TP 4)) (ALT)	Part			0.5000	OZ	1.0000	
	BA NITRATE (46.00%)	Compound	MIL-B-162	///6//				
	POLYVINYL CHLORIDE (16.00%)	Compound	MIL-P-20307					
	LAMINAC (4.89%)	Compound	COMMERCIAL	/4116////				
	LUPERSOL DDM (0.08%)	Compound	COMMERCIAL					
	CO NAPTHENATE (0.03%)	Compound	COMMERCIAL					
	MG 30/50 (33.00%)	Compound	MIL-P-14067	/4////				
	PEP (PYRO 1ST FIRE COMP GRN)	Part	MIL-P-48240	/3////	2.0000	GR	1.0000	0.00143000
	BA NITRATE (50.00%)	Compound	MIL-B-162					
	TETRANITROCARBAZOLE (10.00%)	Compound	MIL-T-13723					
	SI PWDR (13.00%)	Compound	MIL-S-230					
	ZR HYDRIDE (20.00%)	Compound	COMMERCIAL					
	POLYVINYL CHLORIDE (3.00%)	Compound	MIL-P-20307					
	LUPERSOL/LAMINAC (4.00%)	Compound	COMMERCIAL					
	PEP (QUICKMATCH MIX)	Part	MIL-Q-378	/2//A//	2.0000	GR	1.0000	0.00143000
	COTTON WICK (0.00%)	Compound	COMMERCIAL					
	K NITRATE (74.00%)	Compound	MIL-P-156					
	CHARCOAL (15.60%)	Compound	JAN-C-178					
	S (10.40%)	Compound	JAN-S-487					
8797947	TAIL ASSY	Component	ANSI Y14.5M-82				1.0000	
8797948	RING UPPER TAIL (STAINLESS TUBING)	Part	MIL-T-8606				1.0000	
8797948	RING UPPER TAIL (STAINLESS TUBING) (ALT)	Part	MIL-T-8606	/2////			1.0000	
8797949	RING LOWER TAIL (STAINLESS TUBING)	Part	MIL-T-8606				1.0000	
8797949	RING LOWER TAIL (STAINLESS TUBING) (ALT)	Part	MIL-T-8606	/2////			1.0000	
8797950	TAILVANE & RIB ASSY	Component	AWS A2.0				4.0000	
8797951	VANE TAIL (STEEL)	Part	COMMERCIAL	/420////			1.0000	
8797951	VANE TAIL (STEEL) (ALT)	Part	COMMERCIAL	/410////			1.0000	
8797952	RIB TAIL (STAINLESS STEEL)	Part	QQ-S-766	///304//			1.0000	
8887530	PROPELLANT ASSY	Component	ANSI Y14.5-1973				1.0000	
8887529	GRAIN PROP (BLACK PWDR MIX)	Part			13.0000	GM	1.0000	0.02866500
	K NITRATE (67.40%)	Compound	MIL-P-156					
	S (9.50%)	Compound	MIL-S-14929					
	CHARCOAL (14.20%)	Compound	MIL-C-178					
	CA CARBONATE (8.90%)	Compound	MIL-C-293					
8797945	SHEATH (KRAFT PAPER)	Part	UU-P-268	//B///			1.0000	
8797941	PROTECTOR ASSY	Component					1.0000	
8797942	BLOCK PROTECTOR (WOOD)	Part	MIL-L-736				1.0000	
8797943	PROTECTOR RUBBER (RUBBER)	Part	MIL-R-3065	/R/400/RS//			1.0000	
8797938	WASHER & DISC ASSY	Component					1.0000	
8797939	WASHER (HARDBOARD)	Part	ANSI A135.4				1.0000	
8797940	DISC (TISSUE PAPER)	Part	COMMERCIAL	/16 OR 18////			1.0000	
8797940	DISC (TISSUE PAPER) (ALT)	Part	COMMERCIAL	/18 LB////			1.0000	

USADACS - MIDAS DETAILED STRUCTURE FOR A MUNITION (LESS BULK ITEMS)

06/09/97

Nomenclature: SIGNAL ILLUM GRND M125A1

NSN: 1370006292335 DODIC: L314 Reported Weight: 1.1100 LB

DRAWING #	NOMENCLATURE	TYPE	SPECIFICATION	TGCS	-- REPORTED --- WEIGHT	UNIT	FACTOR	FACTORED WEIGHT(LB)
8797959	WASHER DISC ASSY	Component					1.0000	
8797959	DISC LOWER (PAPER ONIONSKIN)	Part	MIL-P-157				1.0000	
8797960	WASHER UPPER (WOOL FELT)	Part	C-F-206	/1//12R3//			1.0000	
8797953	FIRING CAP & SPRING CLIP ASSY	Component					1.0000	
8797955	CAP FIRING (AL ALLOY)	Part	ANSI Y14.5M-198				1.0000	
8797954	PIN FIRING (STEEL)	Part	QQ-S-637	/1117////			1.0000	
8839487	RIVET FLAT HEAD (AL ALLOY)	Part	MS20470	/1100////			1.0000	
8839486	CLIP SPRING (STAINLESS STEEL)	Part	QQ-S-766	///301//			1.0000	
8797926	PRIMER #209	Component	COMMERCIAL				1.0000	
8797926*1	CUP PRIMER (BRS)	Part	COMMERCIAL	/260////			1.0000	
8797926*2	CUP BATTERY (STEEL)	Part	COMMERCIAL				1.0000	
8797926*3	ANVIL (STEEL)	Part	COMMERCIAL				1.0000	
8797926*3	ANVIL (BRS) (ALT)	Part	COMMERCIAL				1.0000	
8797926*4	FOIL DISC (BLEACHED KRAFT PAPER)	Part	COMMERCIAL				1.0000	
	PEP (PRIMER MIX #955)	Part			0.9000	GR	1.0000	0.00012900
	PB STYPHNATE (40.00%)	Compound	MIL-L-757					
	PETN (5.00%)	Compound	MIL-P-387					
	BA NITRATE (30.00%)	Compound	MIL-B-162					
	SB SULFIDE (15.00%)	Compound	MIL-A-159					
	AL (6.00%)	Compound	COMMERCIAL					
	TETRACENE (4.00%)	Compound	MIL-T-46936					
4116-107	PKG FOR NSN 1370006292335	Component					1.0000	
7548414	CAN METAL (METAL CAN)	Part	MIL-C-10464	/1////			1.0000	
7548414*1	KEY (STEEL)	Part	ASTM-A109				1.0000	
7548414*2	SPACER (PADDING MATERIAL)	Part	MIL-P-13607	/1 OR 2////			1.0000	
7548414*3	LABEL (PAPER)	Part	COMMERCIAL				1.0000	
7548415	BOX PACKING (WOOD)	Part	MIL-B-2427	/2//2//	13.0000	LB	0.0278	0.36140000
7548415*1	FILLER (FIBERBOARD)	Part	MIL-F-50449				0.0278	
8794342	SEAL METALLIC (PB ALLOY)	Part	QQ-L-201		0.0039	LB	0.0278	0.00010842
4116/107	PALLET 40" X 48" (WOOD)	Part	MIL-P-15011	/I//1/I/	80.0000	LB	0.0012	0.09600000
								0.65017542

USADACS - MIDAS DETAILED STRUCTURE FOR A MUNITION (LESS BULK ITEMS)

06/09/97

Nomenclature: SIMULATOR PROJ GRND BURST M115A2

NSN: 1370007528126 DODIC: L594 Reported Weight: 0.3000 LB

DRAWING #	NOMENCLATURE	TYPE	SPECIFICATION	TGCS	-- REPORTED --- WEIGHT	UNIT	FACTOR	FACTORED WEIGHT(LB)
7549246	SIMULATOR PROJ GRND BURST M115A2	Munition	MIL-S-10058		0.3000	LB	1.0000	
	PEP (PRIMING PASTE)	Part			0.2000	GR	1.0000	0.00002900
	K NITRATE (66.60%)	Compound	MIL-P-156	///1//				
	S (9.36%)	Compound	COMMERCIAL					
	CHARCOAL (14.04%)	Compound	MIL-C-178	///A//				
	BINDER CELL NITRATE (10.00%)	Compound	MIL-B-10854					
8865588	CHG LOADING ASSY	Component					1.0000	
	PEP (FLASH COMP)	Part	12972326		2.3000	OZ	1.0000	0.14375000
	AL PWDR (42.50%)	Compound	COMMERCIAL					
	K PERCHLORATE (57.50%)	Compound	MIL-P-217	///5//				
7549235	WHISTLE & COVER ASSY	Component					1.0000	
7549228-2	DISC (BOOK COVER BOARD)	Part	UU-B-623				1.0000	
7549234	TUBE INNER (KRAFT PAPER)	Part	UU-P-268	//A///			1.0000	
7549227	WHISTLE LOADING ASSY	Component					1.0000	
	PEP (WHISTLE COMP)	Part			2.0000	GM	1.0000	0.00441000
	K PERCHLORATE (69.00%)	Compound	MIL-P-217	//A/4//				
	NA SALCYLATE (28.00%)	Compound	COMMERCIAL					
	GUM RED (3.00%)	Compound	COMMERCIAL					
7549221	WHISTLE TUBE ASSY	Component					1.0000	
7549219	WHISTLE TUBE (KRAFT PAPER)	Part	UU-P-268	//A///			1.0000	
7549218	SLEEVE (KRAFT PAPER)	Part	UU-P-268				1.0000	
7549220	DISC BOTTOM (CHIPBOARD)	Part	UU-C-282				1.0000	
7549227*1	QUICKMATCH	Component	MIL-Q-378				1.0000	
	PEP (BLACK PWDR)	Part	COMMERCIAL		4.0700	GR	1.0000	0.00058100
	K NITRATE (74.00%)	Compound	MIL-P-156					
	CHARCOAL (15.60%)	Compound	JAN-C-178					
	S (10.40%)	Compound	JAN-S-487	//A///				
7549227*1A	COTTON WICK (COTTON THREAD)	Part	COMMERCIAL				1.0000	
7549233	COVER ASSY	Component					1.0000	
7549228-1	DISC (BOOK COVER BOARD)	Part	UU-B-623				1.0000	
7549228-2	DISC (BOOK COVER BOARD)	Part	UU-B-623				1.0000	
7549232	TUBE SPACER (KRAFT PAPER)	Part	UU-P-268	//A///			1.0000	
7549229	TUBE OUTER (KRAFT PAPER)	Part	UU-P-268	//A///			1.0000	
7549229	TUBE OUTER (KRAFT PAPER) (ALT)	Part	UU-P-268	//B///			1.0000	
7549232	TUBE SPACER (KRAFT PAPER) (ALT)	Part	UU-P-268	//B///			1.0000	
7549236-1	CUP SEALING ASSY	Component					1.0000	
7549236-1	DISC (BOOK COVER BOARD)	Part	UU-B-623				1.0000	
7549236-2	DISC (BOOK COVER BOARD)	Part	UU-B-623				1.0000	
8865589	DISC & WASHER ASSY	Component					1.0000	
7549223	WASHER (CHIPBOARD)	Part	UU-C-282				1.0000	
7549222	DISC CLOSING (KRAFT PAPER)	Part	UU-P-268	//B///			1.0000	
9345134	FUSE CORD SAFETY	Component	COMMERCIAL				1.0000	
9345134*1	OUTER COVER (POLYETHYLENE)	Part	COMMERCIAL				1.0000	
9345134*2	INNER COVER (COTTON)	Part	COMMERCIAL				1.0000	
9345134*2	INNER COVER (JUTE)	Part	COMMERCIAL				1.0000	
	PEP (BLACK PWDR)	Part	COMMERCIAL		0.5000	GR	1.0000	0.00007100
	K NITRATE (74.00%)	Compound	MIL-P-156					
	CHARCOAL (15.60%)	Compound	JAN-C-178					
	S (10.40%)	Compound	JAN-S-487	//A///				
8833721	IGN BLASTING FUSE M3A1 ASSY	Component	MIL-I-12597				1.0000	
8833713	CLIP SAFETY (STEEL WIRE)	Part	QQ-W-470				1.0000	
8833717	SLEEVE (KRAFT PAPER)	Part	UU-P-268	/1/B///			1.0000	

USADACS - MIDAS DETAILED STRUCTURE FOR A MUNITION (LESS BULK ITEMS)

06/09/97

Nomenclature: SIMULATOR PROJ GRND BURST M115A2

NSN: 1370007528126 DODIC: L594 Reported Weight: 0.3000 LB

DRAWING #	NOMENCLATURE	TYPE	SPECIFICATION	TGCS	-- REPORTED --- WEIGHT	UNIT	FACTOR	FACTORED WEIGHT(LB)
8833717	SLEEVE (KRAFT PAPER) (ALT)	Part	UU-P-268	/1/A///			1.0000	
8833722	IGN CHG CAP ASSY	Component					1.0000	
8833712	TUBE (KRAFT PAPER)	Part	UU-P-268	/1/B///			1.0000	
8833712	TUBE (KRAFT PAPER) (ALT)	Part	UU-P-268	/1/A///			1.0000	
8833714	FERRULE (STEEL)	Part	ASTM-A109				1.0000	
8833718	CAP (PLASTIC)	Part	L-P-398	/3//B//			1.0000	
8833723	CORD PULL (NYLON THREAD)	Part	V-T-295	/2//A//			1.0000	
8833710	STAPLE (STEEL WIRE)	Part	QQ-W-414	/2////			1.0000	
8833719	IGN CHG WIRE ASSY	Component					1.0000	
8833716	CUP IGN (CU ALLOY)	Part	MIL-C-21768	////A/			1.0000	
8833719-1	CHG WIRE (STEEL WIRE)	Part	QQ-W-461	/1010////			1.0000	
	PEP (IGN CHG)	Part	8833719		41.0000	MG	1.0000	0.00009000
	K CHLORATE (88.00%)	Compound	MIL-P-150	//A/4//				
	CHARCOAL (10.00%)	Compound	JAN-C-178	///C//				
	DEXTRIN (2.00%)	Compound	MIL-D-3994					
	FRICTION COMP (FRICTION COMP)	Part	8833719		1.4000	GR	1.0000	0.00020000
	PHOSPHORUS RED (21.40%)	Compound	MIL-P-670					
	SHELLAC (78.60%)	Compound	TT-S-271	/1/A OR B//A/				
7549230	COVER & BASE ASSY	Component					1.0000	
7549229	TUBE OUTER (KRAFT PAPER)	Part	UU-P-268	//A///			1.0000	
7549229	TUBE OUTER (KRAFT PAPER) (ALT)	Part	UU-P-268	//B///			1.0000	
7549228-1	DISC (BOOK COVER BOARD)	Part	UU-B-623				1.0000	
								0.14913100

MIDAS: Detailed Structure L599

Nomenclature:	SIMULATOR BOOBY TRAP M118 ILLUM
NSN:	1370000285257
DODIC:	L599
Drawing #:	8848601
Family:	FP
Reported weight:	0.1400 LB
Specification:	MIL-S-10555
Remarks:	

#	Type	Drawing#	Nomenclature	Weight
*1	*Munition	*8848601	SIMULATOR BOOBY TRAP M118 ILLUM	*0.14 LB
*2	*Part	*8848595-1	--TUBE OUTER (KRAFT PAPER)	*0.00
*3	*Bulk item	*	----ENAMEL	
*4	*Bulk item	*	----ENAMEL (ALT)	
*5	*Bulk item	*	----LACQUER (ALT)	
*6	*Bulk item	*	----ADHESIVE (9212301)	
*7	*Bulk item	*	----ADHESIVE DEXTRIN (9224925)	
*8	*Bulk item	*	----STENCIL INK	
*9	*Part	*8848603-1	--BRACKET (STEEL)	*0.00
*10	*Bulk item	*	----CD CHROMATE	
*11	*Bulk item	*	----ZN CHROMATE (ALT)	
*12	*Bulk item	*	----ENAMEL	
*13	*Bulk item	*	----ENAMEL (ALT)	
*14	*Bulk item	*	----LACQUER (ALT)	
*15	*Part	*8848583	--DISC UPPER (CHIPBOARD)	*0.00
*16	*Part	*8848588	--CAP (KRAFT PAPER)	*0.00
*17	*Bulk item	*	----ENAMEL	
*18	*Bulk item	*	----ENAMEL (ALT)	
*19	*Bulk item	*	----LACQUER (ALT)	
*20	*Part	*8882033-2	--LABEL IDENTIFICATION (PAPER)	*0.00
*21	*Bulk item	*	----STENCIL INK	
*22	*Part	*8848601*1	--PULL CORD TAPE (TAPE PRESSURE SENSITIVE)	*0.00
*23	*Bulk item	*	----ENAMEL	
*24	*Bulk item	*	----ENAMEL (ALT)	
*25	*Bulk item	*	----LACQUER (ALT)	
*26	*Part	*8848601*2	--CAP TAPE (TAPE PRESSURE SENSITIVE)	*0.00
*27	*Bulk item	*	----ENAMEL	
*28	*Bulk item	*	----ENAMEL (ALT)	
*29	*Bulk item	*	----LACQUER (ALT)	
*30	*Part	*8848601*3	--BINDING TAPE (TAPE PRESSURE SENSITIVE)	*0.00

*31	*Bulk item	*	----ENAMEL	
*32	*Bulk item	*	----ENAMEL (ALT)	
*33	*Bulk item	*	----LACQUER (ALT)	
*34	*Part	*8848601*4	--SEALING TAPE (TAPE VINYL PLASTIC)	*0.00
*35	*Bulk item	*	----ENAMEL	
*36	*Bulk item	*	----ENAMEL (ALT)	
*37	*Bulk item	*	----LACQUER (ALT)	
*38	*Part	*	--PEP (BLACK PWDR CL 1*1)	*2.25 GR
*39	*Compound	*	----K NITRATE (74.00%)	
*40	*Compound	*	----S (10.40%)	
*41	*Compound	*	----CHARCOAL (15.60%)	
*42	*Component	*8848598	--FLARE ASSY	*0.00
*43	*Part	*8848586-2	----TUBE BODY (KRAFT PAPER)	*0.00
*44	*Bulk item	*	------ADHESIVE DEXTRIN (9224925)	
*45	*Bulk item	*	------ADHESIVE (9212301)	
*46	*Bulk item	*	------TAPE PRESSURE SENSITIVE	
*47	*Part	*8848598*1	----PULL CORD (COTTON TWINE)	*0.00
*48	*Part	*8848596	----PAD IGNITER (WOOL FELT)	*0.00
*49	*Bulk item	*	------ADHESIVE (9212301)	
*50	*Part	*	----PEP (BLACK PWDR CL 3)	*70.00 MG
*51	*Compound	*	------K NITRATE (74.00%)	
*52	*Compound	*	------S (10.40%)	
*53	*Compound	*	------CHARCOAL (15.60%)	
*54	*Part	*	----PEP (STARTER PASTE)	*19.40 GR
*55	*Compound	*	------BINDER CELL NITRATE (15.00%)	
*56	*Compound	*	------K NITRATE (62.90%)	
*57	*Compound	*	------S (8.84%)	
*58	*Compound	*	------CHARCOAL (13.26%)	
*59	*Part	*	----PEP (MATCHHEAD COMP)	*9.56 GR
*60	*Compound	*	------RED PHOSPHORUS (53.00%)	
*61	*Compound	*	------CHARCOAL (5.00%)	
*62	*Compound	*	------SB SULFIDE (42.00%)	
*63	*Part	*	----FLARE COMP (FLARE COMP)	*5.00 GM
*64	*Compound	*	------K PERCHLORATE (80.00%)	
*65	*Compound	*	------DEXTRIN (6.00%)	
*66	*Compound	*	------RED GUM (14.00%)	
*67	*Component	*8848598*2	----QUICKMATCH	*0.00
*68	*Part	*8848598*2	------COTTON WICK (COTTON CLOTH)	*0.00
*69	*Bulk item	*	--------STARCH	
*70	*Bulk item	*	--------DEXTRIN	

*71	*Part	*	------PEP (BLACK PWDR)	*8.14 GR
*72	*Compound	*	--------K NITRATE (74.00%)	
*73	*Compound	*	--------CHARCOAL (15.60%)	
*74	*Compound	*	--------S (10.40%)	
*75	*Component	*8848585	----LOWER DISC ASSY	*0.00
*76	*Part	*8848581	------DISC (CHIPBOARD)	*0.00
*77	*Part	*8848582	------DISC LOWER (CHIPBOARD)	*0.00
*78	*Part	*8848585*1	------STAPLE (STEEL WIRE)	*0.00
*79	*Part	*9233372	------STAPLE (STEEL WIRE) (ALT)	*0.00
*80	*Component	*8848587	----SCRATCHER ASSY	*0.00
*81	*Part	*8848587*1	------PAD (KRAFT PAPER)	*0.00
*82	*Part	*	------PEP (SCRATCH COMP)	*19.17 GR
*83	*Compound	*	--------K CHLORATE (52.00%)	
*84	*Compound	*	--------SB SULFIDE (31.00%)	
*85	*Compound	*	--------DEXTRIN (17.00%)	

*31	*Bulk item	*	----ENAMEL	
*32	*Bulk item	*	----ENAMEL (ALT)	
*33	*Bulk item	*	----LACQUER (ALT)	
*34	*Part	*8848601*4	--SEALING TAPE (TAPE VINYL PLASTIC)	*0.00
*35	*Bulk item	*	----ENAMEL	
*36	*Bulk item	*	----ENAMEL (ALT)	
*37	*Bulk item	*	----LACQUER (ALT)	
*38	*Part	*	--PEP (BLACK PWDR CL 1*1)	*2.25 GR
*39	*Compound	*	----K NITRATE (74.00%)	
*40	*Compound	*	----S (10.40%)	
*41	*Compound	*	----CHARCOAL (15.60%)	
*42	*Component	*8848598	--FLARE ASSY	*0.00
*43	*Part	*8848586-2	----TUBE BODY (KRAFT PAPER)	*0.00
*44	*Bulk item	*	------ADHESIVE DEXTRIN (9224925)	
*45	*Bulk item	*	------ADHESIVE (9212301)	
*46	*Bulk item	*	------TAPE PRESSURE SENSITIVE	
*47	*Part	*8848598*1	----PULL CORD (COTTON TWINE)	*0.00
*48	*Part	*8848596	----PAD IGNITER (WOOL FELT)	*0.00
*49	*Bulk item	*	------ADHESIVE (9212301)	
*50	*Part	*	----PEP (BLACK PWDR CL 3)	*70.00 MG
*51	*Compound	*	------K NITRATE (74.00%)	
*52	*Compound	*	------S (10.40%)	
*53	*Compound	*	------CHARCOAL (15.60%)	
*54	*Part	*	----PEP (STARTER PASTE)	*19.40 GR
*55	*Compound	*	------BINDER CELL NITRATE (15.00%)	
*56	*Compound	*	------K NITRATE (62.90%)	
*57	*Compound	*	------S (8.84%)	
*58	*Compound	*	------CHARCOAL (13.26%)	
*59	*Part	*	----PEP (MATCHHEAD COMP)	*9.56 GR
*60	*Compound	*	------RED PHOSPHORUS (53.00%)	
*61	*Compound	*	------CHARCOAL (5.00%)	
*62	*Compound	*	------SB SULFIDE (42.00%)	
*63	*Part	*	----FLARE COMP (FLARE COMP)	*5.00 GM
*64	*Compound	*	------K PERCHLORATE (80.00%)	
*65	*Compound	*	------DEXTRIN (6.00%)	
*66	*Compound	*	------RED GUM (14.00%)	
*67	*Component	*8848598*2	----QUICKMATCH	*0.00
*68	*Part	*8848598*2	------COTTON WICK (COTTON CLOTH)	*0.00
*69	*Bulk item	*	--------STARCH	
*70	*Bulk item	*	--------DEXTRIN	

*71	*Part	*	------PEP (BLACK PWDR)	*8.14 GR
*72	*Compound	*	--------K NITRATE (74.00%)	
*73	*Compound	*	--------CHARCOAL (15.60%)	
*74	*Compound	*	--------S (10.40%)	
*75	*Component	*8848585	----LOWER DISC ASSY	*0.00
*76	*Part	*8848581	------DISC (CHIPBOARD)	*0.00
*77	*Part	*8848582	------DISC LOWER (CHIPBOARD)	*0.00
*78	*Part	*8848585*1	------STAPLE (STEEL WIRE)	*0.00
*79	*Part	*9233372	------STAPLE (STEEL WIRE) (ALT)	*0.00
*80	*Component	*8848587	----SCRATCHER ASSY	*0.00
*81	*Part	*8848587*1	------PAD (KRAFT PAPER)	*0.00
*82	*Part	*	------PEP (SCRATCH COMP)	*19.17 GR
*83	*Compound	*	--------K CHLORATE (52.00%)	
*84	*Compound	*	--------SB SULFIDE (31.00%)	
*85	*Compound	*	--------DEXTRIN (17.00%)	

MIDAS: Detailed Structure L600

Nomenclature:	SIMULATOR BOOBY TRAP M119 WHISTLE
NSN:	1370000285255
DODIC:	L600
Drawing #:	8848602
Family:	FP
Reported weight:	0.1500 LB
Specification:	MIL-S-10522
Remarks:	

#	Type	Drawing#	Nomenclature	Weight
*1	*Munition	*8848602	SIMULATOR BOOBY TRAP M119 WHISTLE	*0.15 LB
*2	*Part	*8848595-2	--TUBE OUTER (KRAFT PAPER)	*0.00
*3	*Bulk item	*	----ADHESIVE DEXTRIN (9224925)	
*4	*Bulk item	*	----POLYVINYL RESIN (9347369) (ALT)	
*5	*Bulk item	*	----ENAMEL	
*6	*Bulk item	*	----ENAMEL (ALT)	
*7	*Bulk item	*	----LACQUER (ALT)	
*8	*Bulk item	*	----ADHESIVE (9212301)	
*9	*Part	*8848603-2	--BRACKET (STEEL)	*0.00
*10	*Bulk item	*	----ZN CHROMATE	
*11	*Bulk item	*	----CD CHROMATE (ALT)	
*12	*Bulk item	*	----ENAMEL	
*13	*Bulk item	*	----ENAMEL (ALT)	
*14	*Bulk item	*	----LACQUER (ALT)	
*15	*Part	*8848588	--CAP (KRAFT PAPER)	*0.00
*16	*Bulk item	*	----ENAMEL	
*17	*Bulk item	*	----ENAMEL (ALT)	
*18	*Bulk item	*	----LACQUER (ALT)	
*19	*Part	*8882033-3	--LABEL IDENTIFICATION (PAPER)	*0.00
*20	*Bulk item	*	----STENCIL INK	
*21	*Part	*8848602*1	--PULL CORD TAPE (TAPE PRESSURE SENSITIVE)	*0.00
*22	*Part	*8848602*2	--CAP TAPE (TAPE PRESSURE SENSITIVE)	*0.00
*23	*Part	*8848602*3	--BINDING TAPE (TAPE PRESSURE SENSITIVE)	*0.00
*24	*Part	*8848602*4	TAPE PRESSURE SENSITIVE (TAPE VINYL PLASTIC)	*0.00
*25	*Part	*	--PEP (BLACK PWDR CL 1*1)	*2.25 GR
*26	*Compound	*	----K NITRATE (74.00%)	
*27	*Compound	*	----S (10.40%)	
*28	*Compound	*	----CHARCOAL (15.60%)	
*29	*Part	*	--PEP (STARTER PASTE) (ALT)	*2.25 GR
*30	*Compound	*	----BINDER CELL NITRATE (15.00%)	

*31	*Compound	*	----K NITRATE (62.90%)	
*32	*Compound	*	----S (8.84%)	
*33	*Compound	*	----CHARCOAL (13.26%)	
*34	*Component	*8848584	--UPPER DISC ASSY	*0.00
*35	*Part	*8848583	----DISC UPPER (CHIPBOARD)	*0.00
*36	*Part	*8848581	----DISC (CHIPBOARD)	*0.00
*37	*Part	*8848584*1	----STAPLE (STEEL WIRE)	*0.00
*38	*Part	*9233372	----STAPLE (STEEL WIRE) (ALT)	*0.00
*39	*Component	*8848599	--WHISTLE ASSY FOR M119 SIMULATOR	*0.00
*40	*Part	*8848586-3	----TUBE BODY (KRAFT PAPER)	*0.00
*41	*Bulk item	*	------ADHESIVE DEXTRIN (9224925)	
*42	*Bulk item	*	------POLYVINYL RESIN (9347369) (ALT)	
*43	*Part	*8848596	----PAD IGNITER (WOOL FELT)	*0.00
*44	*Bulk item	*	------ADHESIVE (9212301)	
*45	*Part	*9233336	----PAD IGNITER (FELT) (ALT)	*0.00
*46	*Part	*9272250	----WHISTLE COMP (WHISTLE COMP)	*3.50 GM
*47	*Compound	*	------K PERCHLORATE (69.00%)	
*48	*Compound	*	------NA SALCYLATE (28.00%)	
*49	*Compound	*	------GUM RED (3.00%)	
*50	*Part	*8848599*1	----TWINE COTTON SEINE (COTTON TWINE)	*0.00
51	Part	8848599*2	TAPE ADHESIVE PRESSURE SENSITIVE (TAPE PRESSURE SENSITIVE)	0.00
*52	*Part	*	----PEP (STARTER PASTE)	19.40 GR
*53	*Compound	*	------BINDER CELL NITRATE (15.00%)	
*54	*Compound	*	------K NITRATE (62.90%)	
*55	*Compound	*	------S (8.84%)	
*56	*Compound	*	------CHARCOAL (13.26%)	
*57	*Part	*	----PEP (MATCHHEAD COMP)	*9.56 GR
*58	*Compound	*	------RED PHOSPHORUS (53.00%)	
*59	*Compound	*	------CHARCOAL (5.00%)	
*60	*Compound	*	------SB SULFIDE (42.00%)	
*61	*Component	*8848585	----LOWER DISC ASSY	*0.00
*62	*Part	*8848581	------DISC (CHIPBOARD)	*0.00
*63	*Part	*8848582	------DISC LOWER (CHIPBOARD)	*0.00
*64	*Part	*8848585*1	------STAPLE (STEEL WIRE)	*0.00
*65	*Part	*9233372	------STAPLE (STEEL WIRE) (ALT)	*0.00
*66	*Component	*8848599*3	----QUICKMATCH	*0.01 OZ
*67	*Part	8848599*1A	------COTTON WICK (COTTON)	*0.30 GR
*68	*Bulk item	*	--------STARCH	
*69	*Part	*	------PEP (BLACK PWDR)	*4.07 GR
*70	*Compound	*	--------K NITRATE (74.00%)	

*71	*Compound	*	--------CHARCOAL (15.60%)	
*72	*Compound	*	--------S (10.40%)	
*73	*Component	*8848587	----SCRATCHER ASSY	*0.00
*74	*Part	*8848587*1	------PAD (KRAFT PAPER)	*0.00
*75	*Part	*	------PEP (SCRATCH COMP)	19.17 GR
*76	*Compound	*	--------K CHLORATE (52.00%)	
*77	*Compound	*	--------SB SULFIDE (31.00%)	
*78	*Compound	*	--------DEXTRIN (17.00%)	

USADACS - MIDAS DETAILED STRUCTURE FOR A MUNITION (LESS BULK ITEMS)

06/09/97

Nomenclature: SIMULATOR HAND GREN M116A1

NSN: 1370007528124 DODIC: L601

Reported Weight: Not reported

DRAWING #	NOMENCLATURE	TYPE	SPECIFICATION	TGCS	-- REPORTED --- WEIGHT	UNIT	FACTOR	FACTORED WEIGHT(LB)
8835109	SIMULATOR HAND GREN M116A1	Munition					1.0000	
8835120	LABEL (PAPER)	Part	UU-L-49				1.0000	
	PEP (PRIMING PASTE)	Part			0.2000	GR	1.0000	0.00002900
	K NITRATE (66.60%)	Compound	MIL-P-156	///1//				
	S (9.36%)	Compound	COMMERCIAL					
	CHARCOAL (14.04%)	Compound	MIL-C-178	///A//				
	BINDER CELL NITRATE (10.00%)	Compound	MIL-B-10854					
8835110	COVER & BASE ASSY	Component					1.0000	
8835111	TUBE OUTER (KRAFT PAPER)	Part	UU-P-268	//A///			1.0000	
8835112-1	DISC (BOOK COVER BOARD)	Part	UU-B-623				1.0000	
8835113	COVER & BODY LOADING ASSY	Component					1.0000	
	CHG PHOTOFLASH (PHOTOFLASH CHG)	Part	MIL-P-48239		1.3000	OZ	1.0000	0.08125000
	MG POWDER (34.00%)	Compound	MIL-M-382	/1/A///				
	K PERCHLORATE (40.00%)	Compound	MIL-P-217	///5//				
	AL PWDR (26.00%)	Compound	MIL-A-512	/3/F///				
8835114	COVER & BODY ASSY	Component					1.0000	
8835116	TUBE INNER (KRAFT PAPER)	Part	UU-P-268	//A///			1.0000	
8835111	TUBE OUTER (KRAFT PAPER)	Part	UU-P-268	//A///			1.0000	
8835112-1	DISC (BOOK COVER BOARD)	Part	UU-B-623				1.0000	
8835112-2	DISC (BOOK COVER BOARD)	Part	UU-B-623				1.0000	
9345134	FUSE CORD SAFETY	Component	COMMERCIAL				1.0000	
9345134*1	OUTER COVER (POLYETHYLENE)	Part	COMMERCIAL				1.0000	
9345134*2	INNER COVER (COTTON)	Part	COMMERCIAL				1.0000	
9345134*2	INNER COVER (JUTE)	Part	COMMERCIAL				1.0000	
	PEP (BLACK PWDR)	Part	COMMERCIAL		0.5000	GR	1.0000	0.00007100
	K NITRATE (74.00%)	Compound	MIL-P-156					
	CHARCOAL (15.60%)	Compound	JAN-C-178					
	S (10.40%)	Compound	JAN-S-487	//A///				
8835117	CUP SEALING ASSY	Component					1.0000	
8835118-1	DISC (BOOK COVER BOARD)	Part	UU-B-623				1.0000	
8835118-2	DISC (BOOK COVER BOARD)	Part	UU-P-623				1.0000	
8833721	IGN BLASTING FUSE M3A1 ASSY	Component	MIL-I-12597				1.0000	
8833713	CLIP SAFETY (STEEL WIRE)	Part	QQ-W-470				1.0000	
8833717	SLEEVE (KRAFT PAPER)	Part	UU-P-268	/1/B///			1.0000	
8833717	SLEEVE (KRAFT PAPER) (ALT)	Part	UU-P-268	/1/A///			1.0000	
8833722	IGN CHG CAP ASSY	Component					1.0000	
8833712	TUBE (KRAFT PAPER)	Part	UU-P-268	/1/B///			1.0000	
8833712	TUBE (KRAFT PAPER) (ALT)	Part	UU-P-268	/1/A///			1.0000	
8833714	FERRULE (STEEL)	Part	ASTM-A109				1.0000	
8833718	CAP (PLASTIC)	Part	L-P-398	/3//B//			1.0000	
8833723	CORD PULL (NYLON THREAD)	Part	V-T-295	/2//A//			1.0000	
8833710	STAPLE (STEEL WIRE)	Part	QQ-W-414	/2////			1.0000	
8833719	IGN CHG WIRE ASSY	Component					1.0000	
8833716	CUP IGN (CU ALLOY)	Part	MIL-C-21768	////A/			1.0000	
8833719-1	CHG WIRE (STEEL WIRE)	Part	QQ-W-461	/1010////			1.0000	
	PEP (IGN CHG)	Part	8833719		41.0000	MG	1.0000	0.00009000
	K CHLORATE (88.00%)	Compound	MIL-P-150	//A/4//				
	CHARCOAL (10.00%)	Compound	JAN-C-178	///C//				
	DEXTRIN (2.00%)	Compound	MIL-D-3994					
	FRICTION COMP (FRICTION COMP)	Part	8833719		1.4000	GR	1.0000	0.00020000
	PHOSPHORUS RED (21.40%)	Compound	MIL-P-670					
	SHELLAC (78.60%)	Compound	TT-S-271	/1/A OR B//A/				
								0.08164000

DODAC	Type	Quantity	Search	Printout	Page(s)
M023	CHG DEMO M112	606	CD ROM	Yes	1
M028	BANGALORE TORPEDO KIT	4	Not Found	No	
M030	TNT 1/4 #	230	Not Found	No	
M032	CHG. DEMO BLOCK TNT 1LB	376	Internet	Yes	2
M103	CAP BLASTING #3 DELAY ELECT	75	Internet	Yes	1
M130	CAP BLASTING ELECTRIC M6	565	Internet	Yes	2
M131	CAP BLASTING NON ELECT M7	1051	Internet	Yes	1
M420	CHARGE, SHAPED 15 #	56	Not Found	No	
M456	CORD, DETONATION	9882	Internet	Yes	1
M591	MILITARY DYNAMITE M1	128	CD ROM	Yes	1
M627	FIRING DEVICE, PRESSURE	54	Not Found	No	
M670	FUZE BLASTING TIME M700 4000 FT	986	Internet	Yes	1
M766	IGN TIME BLASTING M60	294	Internet	Yes	2
N286	FUZE MTSQ M582	233	CD ROM	Yes	8
N335	FUZE PD M557	2240	CD ROM	Yes	4
N402	FUZE PROX M532	551	CD ROM	Yes	8
N464	FUZE PROX M732	36	CD ROM	Yes	5
N523	PRIMER PERC M82	1236	CD ROM	Yes	1
N525	PRIMER PERC MK2A4	521	CD ROM	Yes	3
Notes:					
DODAC	Department of Defense Activity Code				
Quantity	Quantity of ammunition expended by type in 1989				
Search	Search through the MIDAS database in CD ROM & Internet				
LIST OF ACRONYMS AND ABBREVIATIONS					
BLK	BLANK				
CHG	CHARGE				
CTG	CARTRIDGE				
GRN	GREEN				
GREN	GRENADE				
HE	HIGH EXPLOSIVE				
IGN	IGNATION				
ILLUM	ILLUMINATION				
PROJ	PROJECTILE				
PROP	PROPELLANT				
SMK	SMOKE				
VIO	VIOLET				
WHT	WHITE				
WP	WHITE PHOSPH				
YLW	YELLOW				

06/09/97

USADACS - MIDAS DETAILED STRUCTURE FOR A MUNITION (LESS BULK ITEMS)

Nomenclature: CHG DEMO M112

NSN: 1375007247040 DODIC: M023 Reported Weight: 1.2600 LB

DRAWING #	NOMENCLATURE	TYPE	SPECIFICATION	TGCS	-- REPORTED --- WEIGHT	UNIT	FACTOR	FACTORED WEIGHT(LB)
9204248	CHG DEMO M112	Munition	MIL-C-50523		1.2600	LB	1.0000	
9204248	CHG DEMO M112	Component	MIL-C-50523		1.2600	LB	1.0000	
9204249	CNTR CHG DEMO (PLASTIC/POLYESTER)	Part	L-P-377	/6////			1.0000	
	COMP C-4 (COMP C4)	Part	MIL-C-45010	///2//	1.2500	LB	1.0000	1.25000000
	RDX (91.00%)	Compound	MIL-R-398	/A OR B//H//				
	POLYISOBUTYLENE BIND (9.00%)	Compound	MIL-P-14536					
12913859	CLIP SEALING (AL ALLOY)	Part	ASTM-B209	//1345-H19///	0.0100	LB	1.0000	0.01000000
12913859	CLIP SEALING (AL ALLOY) (ALT)	Part	ASTM-B209	//1230-H19///	0.0100	LB	1.0000	
								1.26000000

MIDAS: Detailed Structure M032

Nomenclature:	CHG DEMO BLOCK TNT 1LB
NSN:	1375000285142
DODIC:	M032
Drawing #:	8885249
Family:	HX
Reported weight:	1.0600 LB
Specification:	MIL-C-46246
Remarks:	

#	Type	Drawing#	Nomenclature	Weight
*1	*Munition	*8885249	CHG DEMO BLOCK TNT 1LB	*1.06 LB
*2	*Component	*8885249	--CHG DEMOLITION BLOCK TNT 1LB	*1.06 LB
*3	*Part	*8885252	----CHG 1LB BLOCK (TNT)	*1.00 LB
*4	*Compound	*	------TNT (100.00%)	
*5	*Part	*8885252	----CHG 1LB BLOCK (TNT PELLET) (ALT)	*1.00 LB
*6	*Compound	*	------TNT (98.25%)	
*7	*Compound	*	------BA STEARATE (1.50%)	
*8	*Compound	*	------GRAPHITE (0.25%)	
*9	*Part	*8885254-1	----DISC FILLER (CHIPBOARD)	*0.00
*10	*Part	*8885254-2	----DISC FILLER (CHIPBOARD)	*0.00
*11	*Part	*8885255-1	----END PLATE (SN PLATE)	*0.02 LB
*12	*Bulk item	*	------PRIMER	
*13	*Bulk item	*	------PRIMER (ALT)	
*14	*Bulk item	*	------LACQUER	
*15	*Bulk item	*	------VARNISH	
*16	*Part	*8885255-1	----END PLATE (STEEL) (ALT)	*0.02 LB
*17	*Bulk item	*	------PRIMER	
*18	*Bulk item	*	------PRIMER (ALT)	
*19	*Bulk item	*	------LACQUER	
*20	*Bulk item	*	------VARNISH	
*21	*Part	*8885255-1	----END PLATE (STEEL) (ALT)	*0.02 LB
*22	*Bulk item	*	------PRIMER	
*23	*Bulk item	*	------PRIMER (ALT)	
*24	*Bulk item	*	------LACQUER	
*25	*Bulk item	*	------VARNISH	
*26	*Bulk item	*	------ZN COATING	
*27	*Component	*8885250-1	----BODY ASSY	*0.00
*28	*Part	*8885251-1	------BODY (TAGBOARD)	*0.00
*29	*Bulk item	*	--------ADHESIVE	
*30	*Bulk item	*	--------GLAZE PAPER	

*31	*Bulk item	*	--------WAX PARAFFIN	
*32	*Bulk item	*	--------STENCIL INK WHT	
*33	*Bulk item	*	--------STENCIL INK YLW	
*34	*Bulk item	*	--------LABEL PRINTED PAPER (ALT)	
*35	*Part	*8885256-1	------END ADAPTER (SN PLATE)	*0.02 LB
*36	*Bulk item	*	--------PRIMER	
*37	*Bulk item	*	--------PRIMER (ALT)	
*38	*Bulk item	*	--------LACQUER	
*39	*Bulk item	*	--------VARNISH	
*40	*Part	*8885256-1	------END ADAPTER (STEEL) (ALT)	*0.02 LB
*41	*Bulk item	*	--------PRIMER	
*42	*Bulk item	*	--------PRIMER (ALT)	
*43	*Bulk item	*	--------LACQUER	
*44	*Bulk item	*	--------VARNISH	
*45	*Part	*8885256-1	------END ADAPTER (STEEL) (ALT)	*0.02 LB
*46	*Bulk item	*	--------PRIMER	
*47	*Bulk item	*	--------PRIMER (ALT)	
*48	*Bulk item	*	--------LACQUER	
*49	*Bulk item	*	--------VARNISH	
*50	*Bulk item	*	--------ZN COATING	
*51	*Part	*8885253	------DISC (PAPER)	*0.00

MIDAS: Detailed Structure M103

Nomenclature:	CAP BLASTING #3 DELAY ELECT
NSN:	1375005298515
DODIC:	M103
Drawing #:	2128449-3
Family:	HX
Reported weight:	0.0000
Specification:	MIL-C-14003
Remarks:	2.1 sec Delay

#	Type	Drawing#	Nomenclature	Weight
*1	*Munition	*2128449-3	CAP BLASTING #3 DELAY ELECT	*0.00
*2	*Component	*2128449-3	--CAP BLASTING DELAY ELECT SPEC	*0.00
*3	*Part	*	----PEP (BASE CHG)	*13.50 GR
*4	*Compound	*	------PETN (100.00%)	
*5	*Part	*	----PEP (BASE CHG) (ALT)	*13.50 GR
*6	*Compound	*	------RDX (100.00%)	
*7	*Part	*	----PEP (PRIMARY CHG)	*0.00
*8	*Compound	*	------PB AZIDE (100.00%)	
*9	*Part	*	----PEP (CHG IGN)	*0.00
*10	*Compound	*	------IGN PWDR (100.00%)	
*11	*Part	*	----PEP (DELAY FUSE)	*0.00
*12	*Compound	*	------FUZE PWDR (100.00%)	
*13	*Part	*2128449*1	----BRIDGE WIRE (WIRE)	*0.00
*14	*Part	*2128449*2	----BRIDGE WIRE PLUG (PLUG)	*0.00
*15	*Bulk item	*	------WATERPROOFING CMPD	
*16	*Part	*2128449*3	----SEAL (S)	*0.00
*17	*Bulk item	*	------WATERPROOFING CMPD	
*18	*Part	*2128449*4	----LEG WIRES (CU WIRE)	232.90 GR
*19	*Bulk item	*	------INSULATION	
*20	*Bulk item	*	------ELASTOMER SEAL	
*21	*Bulk item	*	------WATERPROOFING CMPD	
*22	*Part	*2128449*5	----SHUNT (METAL FOIL**)	*0.00
*23	*Part	*2128449-3	----SHELL (AL ALLOY)	*16.62 GR
*24	*Bulk item	*	------STENCIL INK	
*25	*Bulk item	*	------ELASTOMER SEAL	
*26	*Bulk item	*	------WATERPROOFING CMPD	
*27	*Part	*2128449*6	----TAG (TAG)	*0.00
*28	*Bulk item	*	------STENCIL INK	

MIDAS: Detailed Structure M130

Nomenclature: CAP BLASTING ELECTRIC M6
NSN: 1375002839442
DODIC: M130
Drawing #: 8830972
Family: HX
Reported weight: 0.0700 LB
Specification: MIL-C-45468
Remarks:

#	Type	Drawing#	Nomenclature	Weight
*1	*Munition	*8830972	CAP BLASTING ELECTRIC M6	*0.07 LB
*2	*Component	*8830972	--CAP BLASTING ELECT M6 ASSY	*0.00
*3	*Part	*	----PEP (RDX)	*14.50 GR
*4	*Compound	*	------RDX (100.00%)	
*5	*Part	*	----PEP (PB AZIDE)	*270.00 MG
*6	*Compound	*	------PB AZIDE (100.00%)	
*7	*Part	*	----PEP (CHG INTERMEDIATE) (ALT)	*270.00 MG
*8	*Compound	*	------PB AZIDE (99.50%)	
*9	*Compound	*	------CA STEARATE (0.50%)	
*10	*Part	*	----PEP (IGN CHG)	*1.80 GR
*11	*Compound	*	------SMKLESS PWDR (50.00%)	
*12	*Compound	*	------PB-NA DINITRO ORTHO (25.00%)	
*13	*Compound	*	------K CHLORATE (25.00%)	
*14	*Part	*8830953-2	----CUP (AL ALLOY)	*8.70 GR
*15	*Part	*8830954	----SPOOL (BOXBOARD)	*0.00
*16	*Bulk item	*	------FLOUR PASTE	
*17	*Part	*8830954	----SPOOL (KRAFT PAPER) (ALT)	*0.00
*18	*Component	*8830971-1	----PLUG ASSY	*0.00
*19	*Part	*8830971-1*1	------PLUG SEAL (NEOPRENE RUBBER)	*0.00
*20	*Part	*8830971-1*2	------LEAD WIRE 12FT (CU ALLOY)	*165.00 GR
*21	*Bulk item	*	--------INSULATION PLASTIC	
*22	*Bulk item	*	--------NYLON INSULATION (9344970) (ALT)	
*23	*Bulk item	*	--------SN-PB SOLDER	
*24	*Bulk item	*	--------SN-PB SOLDER (ALT)	
*25	*Part	*8830971-1*3	------BRIDGE WIRE (PT ALLOY)	*0.00
*26	*Bulk item	*	--------SN-PB SOLDER	
*27	*Bulk item	*	--------SN-PB SOLDER (ALT)	
*28	*Component	*8830951	--CAP BLASTING ELECT M6 ASSY (ALT)	*0.00
*29	*Part	*	----PEP (RDX)	*14.50 GR
*30	*Compound	*	------RDX (100.00%)	

*31	*Part	*	----PEP (PB AZIDE)	*270.00 MG
*32	*Compound	*	------PB AZIDE (100.00%)	
*33	*Part	*	----PEP (CHG INTERMEDIATE) (ALT)	*270.00 MG
*34	*Compound	*	------PB AZIDE (99.50%)	
*35	*Compound	*	------CA STEARATE (0.50%)	
*36	*Part	*	----PEP (IGN CHG)	*1.80 GR
*37	*Compound	*	------SMKLESS PWDR (50.00%)	
*38	*Compound	*	------PB-NA DINITRO ORTHO (25.00%)	
*39	*Compound	*	------K CHLORATE (25.00%)	
*40	*Part	*8830954	----SPOOL (BOXBOARD)	*0.00
*41	*Bulk item	*	------FLOUR PASTE	
*42	*Part	*8830954	----SPOOL (KRAFT PAPER) (ALT)	*0.00
*43	*Part	*8830953-1	----CUP (AL ALLOY)	*8.70 GR
*44	*Component	*8860877-1	----RUBBER & SULFUR PLUG ASSY	*0.00
*45	*Part	*8860876	------PLUG (NEOPRENE RUBBER)	*0.00
*46	*Component	*8830952-1	------PLUG ASSY	*0.00
*47	*Part	*8830952-1*1	--------PLUG (S COMP)	*0.00
*48	*Part	*8830952-1*2	--------BRIDGE WIRE (PT ALLOY)	*0.00
*49	*Bulk item	*	----------SN-PB SOLDER	
*50	*Bulk item	*	----------SN-PB SOLDER (ALT)	
*51	*Part	*8830952-1*3	--------LEAD WIRE (CU ALLOY)	*165.00 GR
*52	*Bulk item	*	----------NYLON INSULATION (9344970)	
*53	*Bulk item	*	----------SN-PB SOLDER	
*54	*Bulk item	*	----------SN-PB SOLDER (ALT)	

MIDAS: Detailed Structure M131

Nomenclature:	CAP BLASTING NON ELECT M7
NSN:	1375002839440
DODIC:	M131
Drawing #:	8830948
Family:	HX
Reported weight:	27.9970 grains
Specification:	MIL-C-45469
Remarks:	

#	Type	Drawing#	Nomenclature	Weight
*1	*Munition	*8830948	CAP BLASTING NON ELECT M7	*28.00 GR
*2	*Component	*8830948	--CAP BLASTING NON ELECT M7 ASSY	*0.00
*3	*Part	*8830949	----CUP (AL ALLOY)	*8.70 GR
*4	*Part	*	----PEP (RDX)	*14.50 GR
*5	*Compound	*	------RDX (100.00%)	
*6	*Part	*	----PEP (RDX) (ALT)	*14.50 GR
*7	*Compound	*	------RDX (100.00%)	
*8	*Part	*	----PEP (PB AZIDE)	*3.70 GR
*9	*Compound	*	------PB AZIDE (100.00%)	
*10	*Part	*	----PEP (PB STYPHNATE)	*1.10 GR
*11	*Compound	*	------PB STYPHNATE (100.00%)	
*12	*Part	*	----PEP (CHG IGN) (ALT)	*1.10 GR
*13	*Compound	*	------PB AZIDE (60.00%)	
*14	*Compound	*	------PB STYPHNATE (40.00%)	

MIDAS: Detailed Structure M456

Nomenclature:	CORD DETONATING
NSN:	1375000285168
DODIC:	M456
Drawing #:	MIL-C-17124
Family:	HX
Reported weight:	88.0000 LB
Specification:	MIL-C-17124
Remarks:	CLASS E WT = 22 lbs/1000ft x 4 (factor) 4000 FT. per this nsn

#	Type	Drawing#	Nomenclature	Weight
1	Munition	MIL-C-17124	CORD DETONATING	88.00 LB
2	Component	MIL-C-17124*1	--CORD DET TY 1 CL E (1 FT)	0.02 LB
3	Part	MIL-C-17124*1	THERMO PLASTIC COATING (POLYETHYLENE PLASTIC)	0.00
4	Part	MIL-C-17124*3	----TAPE PACKAGING (TAPE PRESSURE SENSITIVE)	0.00
5	Part	MIL-C-17124*2	----TUBE TEXTILE (COTTON)	0.00 LB
6	Bulk item		------ASPHALT COMPOUND	
7	Part		----PEP (PETN)	0.01 LB
8	Compound		------PETN (100.00%)	

USADACS - MIDAS DETAILED STRUCTURE FOR A MUNITION (LESS BULK ITEMS)

06/09/97

Nomenclature: MILITARY DYNAMITE M1

NSN: 1375007249613 DODIC: M591 Reported Weight: 0.3900 LB

DRAWING #	NOMENCLATURE	TYPE	SPECIFICATION	TGCS	-- REPORTED --- WEIGHT	UNIT	FACTOR	FACTORED WEIGHT(LB)
MIL-D-45413	MILITARY DYNAMITE M1	Munition	MIL-D-45413		0.3900	LB	1.0000	
MIL-D-45413*1	PAPER CTG (MANILLIA PAPER)	Part	COMMERCIAL		0.0200	LB	1.0000	0.02000000
	DYNAMITE (DYNAMITE)	Part	MIL-D-45413		0.3700	LB	1.0000	0.37000000
	RDX (73.00%)	Compound	MIL-R-398	/2//1//				
	PROCESS OIL (5.00%)	Compound	MIL-P-14796					
	TNT (15.00%)	Compound	MIL-T-248	/1////				
	GUAR GUM (5.00%)	Compound	MIL-G-51133					
	PIB OIL GEL (2.00%)	Compound	MIL-P-13822					
	DYNAMITE (DYNAMITE (LUB OIL)) (ALT)	Part	MIL-D-45413		0.3700	LB	1.0000	
	RDX (73.00%)	Compound	MIL-R-398	/2//1//				
	LUB OIL (5.00%)	Compound	MIL-L-2104	//10///				
	TNT (15.00%)	Compound	MIL-T-248	/1////				
	GUAR GUM (5.00%)	Compound	MIL-G-51133					
	PIB OIL GEL (2.00%)	Compound	MIL-P-13822					
								0.39000000

MIDAS: Detailed Structure M670

Nomenclature:	FUSE BLASTING TIME M700 4000 FT
NSN:	1375000285151
DODIC:	M670
Drawing #:	MIL-F-45144
Family:	SC
Reported weight:	68.0000 LB
Specification:	MIL-F-45144
Remarks:	WT. estimated per PKG DWG 9242365

#	Type	Drawing#	Nomenclature	Weight
*1	*Munition	*MIL-F-45144	FUSE BLASTING TIME M700 4000 FT	*68.00 LB
*2	*Component	*MIL-F-45144	--FUSE BLASTING TIME	*0.02 LB
*3	*Part	*MIL-F-45144*1	----INNER CORD (COTTON YARN)	*0.00 LB
*4	*Part	*MIL-F-45144*2	----MIDDLE CORD (JUTE YARN)	*0.00 LB
*5	*Part	*MIL-F-45144*3	----OUTER CORD (COTTON YARN)	*0.00 LB
*6	*Bulk item	*	------ASPHALT COMPOUND	
*7	*Part	*MIL-F-45144*4	----OUTER COVER (POLYETHYLENE PLASTIC)	*0.00 LB
*8	*Part	*	----PEP (BLACK PWDR (SPECIAL))	*0.00 LB
*9	*Compound	*	------K NITRATE (71.00%)	
*10	*Compound	*	------S (13.00%)	
*11	*Compound	*	------CHARCOAL (16.00%)	

MIDAS: Detailed Structure M766

Nomenclature:	IGN TIME BLASTING M60
NSN:	1375002839452
DODIC:	M766
Drawing #:	8822497
Family:	SC
Reported weight:	0.0000
Specification:	MIL-I-394
Remarks:	

#	Type	Drawing#	Nomenclature	Weight
*1	*Munition	*8822497	IGN TIME BLASTING M60	*0.00
*2	*Part	*8822503	--WASHER SMALL (PLASTIC)	*0.00
*3	*Part	*8822500	--GROMMET (RUBBER)	*0.00
*4	*Part	*8822502	--WASHER LARGE (PLASTIC)	*0.00
*5	*Part	*8822499	--COLLET (PLASTIC)	*0.00 LB
*6	*Part	*8822501	--PLUG SHIPPIING (PLASTIC)	*0.00 LB
*7	*Component	*8822504	--FIRING ASSY	*0.00
*8	*Part	*8822507	----RING PULL (STEEL WIRE)	*0.00 LB
*9	*Bulk item	*	------CD CHROMATE	
*10	*Bulk item	*	------ZN CHROMATE (ALT)	
*11	*Part	*9230181	----CORD (COTTON)	*0.00
*12	*Bulk item	*	------GLAZING COMPOUND	
*13	*Part	*8822505	----CAP TOP (PLASTIC)	*0.01 LB
*14	*Part	*8822508	----ROD PULL (STAINLESS STEEL)	*0.01 LB
*15	*Part	*8822506	----HOUSING (PLASTIC)	*0.00
*16	*Bulk item	*	------STENCIL INK YLW	
*17	*Part	*8822509	----SPRING FIRING PIN (SPRING STEEL)	*0.03 LB
*18	*Bulk item	*	------CD CHROMATE	
*19	*Part	*8822511	----WASHER RELEASE (STAINLESS STEEL)	*0.00 LB
*20	*Part	*8822510	----WASHER FRICTION (RUBBER)	*0.00 LB
*21	*Part	MS24665-136	----COTTER PIN (STAINLESS STEEL)	*0.00
*22	*Bulk item	*	------CD CHROMATE	
*23	*Bulk item	*	------ZN PHOSPHATE (ALT)	
*24	*Component	*8822512	----STRIKER ASSY	*0.01 LB
*25	*Part	*8822513	------HOUSING FIRING PIN (STAINLESS STEEL)	*0.00 LB
*26	*Part	*8822514	------FIRING PIN (STAINLESS STEEL)	*0.00 LB
*27	*Component	*8822515	--PRIMER & BASE ASSY	*0.00
*28	*Part	*8822516	----BASE PRIMER (PLASTIC)	*0.01 LB
*29	*Component	*8798919	----PRIMER PERC M39A1 ASSY	*0.00
*30	*Part	*8798921	------BODY (CU ALLOY)	*0.00

*31	*Bulk item	*	--------VARNISH	
*32	*Part	*8798923	------DISC (PAPER SEALING)	*0.00
*33	*Bulk item	*	--------SHELLAC	
*34	*Part	*8798920	------ANVIL (CU ALLOY)	*0.00
*35	*Part	*8798922	------CUP (CU ALLOY)	*0.00
*36	*Bulk item	*	--------LACQUER CELL NITRATE	
*37	*Part	*	------PEP (PRIMER MIX)	*0.40 GR
*38	*Compound	*	--------K CHLORATE (37.05%)	
*39	*Compound	*	--------PB THIOCYANATE (38.13%)	
*40	*Compound	*	--------TNT (5.69%)	
*41	*Compound	*	--------BA NITRATE (8.68%)	
*42	*Compound	*	--------GROUND GLASS (10.45%)	
*43	*Component	*9357999	--PRIMER & BASE ASSY (ALT)	*0.00
*44	*Part	*9357998	----BASE PRIMER (PLASTIC)	*0.01 LB
*45	*Component	*9357997	----PRIMER PERC #209 MODIFIED	*0.00
*46	*Part	*9357997*1	------CUP PRIMER (BRASS)	*0.00
*47	*Bulk item	*	--------NI PLATING	
*48	*Part	*9357997*2	------CUP BATTERY (STEEL)	*0.00
*49	*Bulk item	*	--------CU PLATING	
*50	*Part	*9357997*3	------ANVIL (BRASS)	*0.00
*51	*Bulk item	*	--------CU PLATING	
*52	*Part	*9357997*3	------ANVIL (STEEL) (ALT)	*0.00
*53	*Bulk item	*	--------CU PLATING	
*54	*Part	*9357997*4	------FOIL DISC (BLEACHED KRAFT PAPER)	*0.00
*55	*Part	*	------PEP (PRIMER MIX #955)	*0.48 GR
*56	*Compound	*	--------PB STYPHNATE (40.00%)	
*57	*Compound	*	--------PETN (5.00%)	
*58	*Compound	*	--------BA NITRATE (30.00%)	
*59	*Compound	*	--------SB SULFIDE (15.00%)	
*60	*Compound	*	--------AL PWDR (6.00%)	
*61	*Compound	*	--------TETRACENE (4.00%)	

USADACS - MIDAS DETAILED STRUCTURE FOR A MUNITION (LESS BULK ITEMS)

06/09/97

Nomenclature: FUZE MTSQ M582

NSN: 1390001695864 DODIC: N286 Reported Weight: 1.5100 LB

DRAWING #	NOMENCLATURE	TYPE	SPECIFICATION	TGCS	-- REPORTED --- WEIGHT	UNIT	FACTOR	FACTORED WEIGHT(LB)
9236701	FUZE MTSQ M582	Munition	MIL-F-48880		1.5100	LB	1.0000	
9236701	FUZE MTSQ M582	Component	MIL-F-48880		1.5100	LB	1.0000	
8595509	CUP BOOSTER (AL ALLOY)	Part	ASTM-B209	////SILASTIC/			1.0000	
8595509	CUP BOOSTER (AL ALLOY) (ALT)	Part	MIL-A-12545	////SILASTIC/			1.0000	
8595510	PELLET BOOSTER (PELLET EXPL COMP)	Part	MIL-P-48395	/6A OR B////	23.2640	GM	1.0000	0.05129700
	RDX (98.50%)	Compound	MIL-R-398					
	STEARIC ACID (1.50%)	Compound	MIL-S-271					
9236700	FUZE MTSQ M582 W/O BOOSTER	Component	MIL-F-50983				1.0000	
9236509	BODY (STAINLESS STEEL)	Part	ASTM-A582	/416////			1.0000	
9236510	WASHER SUPPORT (STAINLESS STEEL)	Part	ASTM-A167	/302////			1.0000	
9236510	WASHER SUPPORT (STAINLESS STEEL) (ALT)	Part	ASTM-A167	/304////			1.0000	
9236510	WASHER SUPPORT (STAINLESS STEEL) (ALT)	Part	ASTM-A167	/305////			1.0000	
9236501	PIN SPRING TUBULAR COILED (STAINLESS STEEL)	Part	FED-STD-66	/410-420////			1.0000	
9236520	SLEEVE CLUTCH DRIVE (STAINLESS STEEL)	Part	ASTM-A269	//TP304///			1.0000	
9236520	SLEEVE CLUTCH DRIVE (STAINLESS STEEL) (ALT)	Part	ASTM-A269	//TP304L///			1.0000	
9236520	SLEEVE CLUTCH DRIVE (STAINLESS STEEL) (ALT)	Part	ASTM-A269	//TP316///			1.0000	
9236520	SLEEVE CLUTCH DRIVE (STAINLESS STEEL) (ALT)	Part	ASTM-A269	//TP316L///			1.0000	
9236520	SLEEVE CLUTCH DRIVE (STAINLESS STEEL) (ALT)	Part	ASTM-A269	//TP317///			1.0000	
9236520	SLEEVE CLUTCH DRIVE (STAINLESS STEEL) (ALT)	Part	ASTM-A269	//TP321///			1.0000	
9236520	SLEEVE CLUTCH DRIVE (STAINLESS STEEL) (ALT)	Part	ASTM-A269	//TP347///			1.0000	
9236520	SLEEVE CLUTCH DRIVE (STAINLESS STEEL) (ALT)	Part	ASTM-A269	//TP348///			1.0000	
9236520	SLEEVE CLUTCH DRIVE (STAINLESS STEEL) (ALT)	Part	ASTM-A167	/301////			1.0000	
9236520	SLEEVE CLUTCH DRIVE (STAINLESS STEEL) (ALT)	Part	ASTM-A167	/302////			1.0000	
9236520	SLEEVE CLUTCH DRIVE (STAINLESS STEEL) (ALT)	Part	ASTM-A167	/302B////			1.0000	
9236520	SLEEVE CLUTCH DRIVE (STAINLESS STEEL) (ALT)	Part	ASTM-A167	/304////			1.0000	
9236520	SLEEVE CLUTCH DRIVE (STAINLESS STEEL) (ALT)	Part	ASTM-A167	/304L////			1.0000	
9236520	SLEEVE CLUTCH DRIVE (STAINLESS STEEL) (ALT)	Part	ASTM-A167	/305////			1.0000	
9236520	SLEEVE CLUTCH DRIVE (STAINLESS STEEL) (ALT)	Part	ASTM-A167	/309////			1.0000	
9236520	SLEEVE CLUTCH DRIVE (STAINLESS STEEL) (ALT)	Part	ASTM-A167	/309S////			1.0000	
9236520	SLEEVE CLUTCH DRIVE (STAINLESS STEEL) (ALT)	Part	ASTM-A167	/316////			1.0000	
9236520	SLEEVE CLUTCH DRIVE (STAINLESS STEEL) (ALT)	Part	ASTM-A167	/317////			1.0000	
9236520	SLEEVE CLUTCH DRIVE (STAINLESS STEEL) (ALT)	Part	ASTM-A167	/317L////			1.0000	
9236520	SLEEVE CLUTCH DRIVE (STAINLESS STEEL) (ALT)	Part	ASTM-A167	/321////			1.0000	
9236520	SLEEVE CLUTCH DRIVE (STAINLESS STEEL) (ALT)	Part	ASTM-A167	/347////			1.0000	
9236520	SLEEVE CLUTCH DRIVE (STAINLESS STEEL) (ALT)	Part	ASTM-A167	/348////			1.0000	
9236515	RING SETTING KEY (POLYTETRAFLUOROETHYLENE)	Part	AMS-3651				1.0000	
9236502	PLUG ASSY	Component					1.0000	
9236493	DISC CLOSURE (AL TAPE)	Part	L-T-80				1.0000	
9236503	PLUG BODY (AL ALLOY)	Part	ASTM-B211				1.0000	
9236504	LEAD EXPL PA510	Component	MIL-L-48066				1.0000	
	PEP (PELLET EXPL COMP)	Part	MIL-P-48395	/3////	258.0000	MG	1.0000	0.00056900
	RDX (98.20%)	Compound	MIL-R-398					
	CA RESINATE (1.20%)	Compound	MIL-C-20470	/2////				
	GRAPHITE (0.60%)	Compound	MIL-G-155	//AORB///				
9236506	DISC RETAINER (AL ALLOY)	Part	ASTM-B209				2.0000	
9236505	CUP LEAD (STAINLESS STEEL)	Part	ASTM-A167	/304////			1.0000	
9236505	CUP LEAD (STAINLESS STEEL) (ALT)	Part	ASTM-A167	/304L////			1.0000	
9236505	CUP LEAD (STAINLESS STEEL) (ALT)	Part	ASTM-A167	/305////			1.0000	
9236524	SAFE SEPARATION DEVICE ASSY	Component					1.0000	
9236525	SSD LOADED ASSY	Component					1.0000	
9236526	SSD INERT ASSY	Component					1.0000	
9236527	PLATE BOTTOM SSD (AL ALLOY)	Part	ASTM-B209	/2024-T4////			1.0000	

USADACS - MIDAS DETAILED STRUCTURE FOR A MUNITION (LESS BULK ITEMS)

Nomenclature: FUZE MTSQ M582
NSN: 1390001695864 DODIC: N286 Reported Weight: 1.5100 LB

DRAWING #	NOMENCLATURE	TYPE	SPECIFICATION	TGCS	-- REPORTED --- WEIGHT	UNIT	FACTOR	FACTORED WEIGHT(LB)
9236527	PLATE BOTTOM SSD (AL ALLOY) (ALT)	Part	ASTM-B209	/2024-T62////			1.0000	
9236527	PLATE BOTTOM SSD (AL ALLOY) (ALT)	Part	ASTM-B209	/6061-T4////			1.0000	
9236552	SPACER & PLATE ASSY	Component					1.0000	
11786098	LOCK ROTOR SSD (STAINLESS STEEL)	Part	ASTM-A177				1.0000	
9236556	PIN SPACER SSD (STAINLESS STEEL)	Part	ASTM-A581	/416////			2.0000	
9236556	PIN SPACER SSD (STAINLESS STEEL) (ALT)	Part	ASTM-A581	/416SE////			2.0000	
9236555	SPACER SSD (ZN ALLOY)	Part	ASTM-B86	/AG40A////			1.0000	
9236553	PLATE TOP SSD (AL ALLOY)	Part	ASTM-B209	/2024-T4////			1.0000	
9236553	PLATE TOP SSD (AL ALLOY) (ALT)	Part	ASTM-B209	/2024-T62////			1.0000	
9236553	PLATE TOP SSD (AL ALLOY) (ALT)	Part	ASTM-B209	/6061-T4////			1.0000	
11786090	ROTOR ASSY SSD	Component					1.0000	
11786092	ROTOR SSD (ZN ALLOY)	Part	ASTM-B86	/AG40A////			1.0000	
11786091	SHAFT ROTOR SSD (STAINLESS STEEL)	Part	ASTM-A581	/416////			1.0000	
11786091	SHAFT ROTOR SSD (STAINLESS STEEL) (ALT)	Part	ASTM-A581	/416SE////			1.0000	
9236544	INTERLOCK DETENT & SPRING ASSY SSD	Component					1.0000	
9236545	SPRING DETENT SSD (STAINLESS STEEL)	Part	ASTM-A177				2.0000	
9236545	SPRING DETENT SSD (STAINLESS STEEL) (ALT)	Part	ASTM-A580	/302////			2.0000	
9236546	INTERLOCK DETENT ASSY SSD	Component					1.0000	
9236547	DETENT INTERLOCK SSD (STAINLESS STEEL)	Part	ASTM-B525	/2/2///			1.0000	
9236547	DETENT INTERLOCK SSD (STAINLESS STEEL) (ALT)	Part	ASTM-B525	/3/2///			1.0000	
9236548	PIN INTERLOCK SSD (STAINLESS STEEL)	Part	ASTM-A581	/416////			1.0000	
9236548	PIN INTERLOCK SSD (STAINLESS STEEL) (ALT)	Part	ASTM-A581	/416SE////			1.0000	
9236550	SPRING DETENT & SPRING ASSY SSD	Component					1.0000	
9236550	DETENT SPIN SSD (STAINLESS STEEL)	Part	ASTM-B525	/2/2///			1.0000	
9236550	DETENT SPIN SSD (STAINLESS STEEL) (ALT)	Part	ASTM-B525	/3/2///			1.0000	
9236545	SPRING DETENT SSD (STAINLESS STEEL)	Part	ASTM-A177				2.0000	
9236545	SPRING DETENT SSD (STAINLESS STEEL) (ALT)	Part	ASTM-A580	/302////			2.0000	
9236534	GEAR & PINION ASSY SSD	Component					1.0000	
9236536	GEAR SSD (AL ALLOY)	Part	ASTM-B209	/2024-T4////			1.0000	
9236535	PINION SSD (STAINLESS STEEL)	Part	ASTM-A581	/416////			1.0000	
9236535	PINION SSD (STAINLESS STEEL) (ALT)	Part	ASTM-A581	/416E////			1.0000	
11786093	ESCAPE WHEEL ASSY SSD	Component					1.0000	
11786094	ESCAPEMENT WHEEL (CU-BE ALLOY)	Part	ASTM-B194				1.0000	
9236538	PINION ESCAPEMENT SSD (STAINLESS STEEL)	Part	ASTM-A581	/416////			1.0000	
9236538	PINION ESCAPEMENT SSD (STAINLESS STEEL) (ALT)	Part	ASTM-A581	/416SE////			1.0000	
11786095	LEVER ASSY SSD	Component					1.0000	
11786096	SHAFT LEVER SSD (STAINLESS STEEL)	Part	ASTM-A581	/416////			1.0000	
11786096	SHAFT LEVER SSD (STAINLESS STEEL) (ALT)	Part	ASTM-A581	/416SE////			1.0000	
11786097	LEVER SSD (BRS)	Part	ASTM-B36	/260////			1.0000	
9236470	DETONATOR STAB M94	Component	MIL-D-48111				1.0000	
9236471	CUP DETONATOR (AL FOIL)	Part	QQ-A-1876				1.0000	
9236471	CUP DETONATOR (AL ALLOY) (ALT)	Part	ASTM-B209				1.0000	
9236472	DISC DETONATOR CLOSING (AL FOIL)	Part	QQ-A-1876				1.0000	
9236472	DISC DETONATOR CLOSING (AL ALLOY) (ALT)	Part	ASTM-B209				1.0000	
	PEP (PRIMER MIX NOL #130*10)	Part			23.0000	MG	1.0000	0.00005100
	PB STYPHNATE (40.00%)	Compound	MIL-L-16355	/1OR2////				
	SB SULFIDE (15.00%)	Compound	MIL-A-159	///5//				
	BA NITRATE (20.00%)	Compound	MIL-B-162	///1//				
	PB AZIDE (20.00%)	Compound	MIL-L-3055	/1////				
	TETRACENE (5.00%)	Compound	MIL-T-46938					
	PEP (PB AZIDE)	Part	MIL-L-46225		75.0000	MG	1.0000	0.00016500
	PB AZIDE (100.00%)	Compound	MIL-L-46225					
	PEP (PB AZIDE) (ALT)	Part	MIL-L-14758		75.0000	MG	1.0000	

USADACS - MIDAS DETAILED STRUCTURE FOR A MUNITION (LESS BULK ITEMS)

Nomenclature: FUZE MTSQ M582
NSN: 1390001695864 DODIC: N286 Reported Weight: 1.5100 LB

DRAWING #	NOMENCLATURE	TYPE	SPECIFICATION	TGCS	-- REPORTED --- WEIGHT	UNIT	FACTOR	FACTORED WEIGHT(LB)
	PB AZIDE (100.00%)	Compound	MIL-L-14758					
	PEP (RDX PELLETS)	Part	MIL-P-48395	/1////	70.0000	MG	1.0000	0.00015400
	RDX (100.00%)	Compound	MIL-R-398	/1////				
	PEP (RDX) (ALT)	Part	MIL-R-398	/2//1//	70.0000	MG	1.0000	
	RDX (100.00%)	Compound	MIL-R-398	/2//1//				
9236558	THREE MODULE ASSY LOADED	Component					1.0000	
9236554	TAPE MDF SUPPORT (TAPE)	Part	L-T-90	/2//A//			1.0000	
9236491	TAPE (AL TAPE)	Part	L-T-80				1.0000	
9236569	THREE MODULE ASSY	Component					1.0000	
9345285	HOUSING PD (PLASTIC)	Part	L-P-393				1.0000	
9236587	RING RETAINING TIMER HOUSING (STAINLESS STEEL)	Part	ASTM-A313	/302////			1.0000	
9236596-1	SPACER (STAINLESS STEEL)	Part	ASTM-A167	/301////			1.0000	
9236596-2	SPACER (STAINLESS STEEL)	Part	ASTM-A167	/301////			1.0000	
9236596-3	SPACER (STAINLESS STEEL)	Part	ASTM-A167	/301////			1.0000	
9236596	SPACER (STAINLESS STEEL)	Part	ASTM-A167	/301////			1.0000	
9236596-5	SPACER (STAINLESS STEEL)	Part	ASTM-A167	/301////			1.0000	
9236601	SCREW MACHINE FILLISTER HEAD (STEEL)	Part	ASTM-A545	//1018///			3.0000	
9236601	SCREW MACHINE FILLISTER HEAD (STEEL) (ALT)	Part	ASTM-A545	//1020///			3.0000	
9236633	WASHER SLEEVE (STAINLESS STEEL)	Part	ASTM-A167	/301////			1.0000	
9236600	PIN SETBACK (STAINLESS STEEL)	Part	ASTM-A581	/416////			1.0000	
9236600	PIN SETBACK (STAINLESS STEEL) (ALT)	Part	ASTM-A581	/416SE////			1.0000	
9236599	SPRING SETBACK (STAINLESS STEEL)	Part	ASTM-A313				1.0000	
9236597	RETAINER SETBACK (STAINLESS STEEL)	Part	ASTM-A167	/302////			1.0000	
9236570	RING GRIP CLUTCH (STAINLESS STEEL)	Part	MIL-S-25043				1.0000	
9236570	RING GRIP CLUTCH (STAINLESS STEEL) (ALT)	Part	AMS-5528				1.0000	
9236571	SPACER CLUTCH (AL ALLOY)	Part	ASTM-B209	/5052////			1.0000	
9236571	SPACER CLUTCH (AL ALLOY) (ALT)	Part	ASTM-B209	/5005////			1.0000	
9236571	SPACER CLUTCH (AL ALLOY) (ALT)	Part	ASTM-B209	/1100////			1.0000	
9236571	SPACER CLUTCH (AL ALLOY) (ALT)	Part	ASTM-B209	/3004////			1.0000	
9236551	WASHER SET CLUTCH (STAINLESS STEEL)	Part	ASTM-A177	/301////			1.0000	
9236551	WASHER SET CLUTCH (STAINLESS STEEL) (ALT)	Part	MIL-S-5059	/301////			1.0000	
9236551	WASHER SET CLUTCH (STAINLESS STEEL) (ALT)	Part	MIL-S-5059	/302////			1.0000	
9236551	WASHER SET CLUTCH (STAINLESS STEEL) (ALT)	Part	MIL-S-5059	/304////			1.0000	
9236566	SPACER (AL ALLOY)	Part	ASTM-B209				1.0000	
9236566	SPACER (AL ALLOY) (ALT)	Part	ASTM-B211				1.0000	
9236588	TIMER HOUSING ASSY	Component					1.0000	
9236589	HOUSING TIMER (STAINLESS STEEL)	Part	ASTM-A167	/304////			1.0000	
9236593	PLATE BEARING (STAINLESS STEEL)	Part	ASTM-A167	/301////			1.0000	
9236593	PLATE BEARING (STAINLESS STEEL) (ALT)	Part	ASTM-A177	/301////			1.0000	
9236595	PLATE SETTING GEAR DRIVE (AL ALLOY)	Part	ASTM-B209	/2024-T3////			1.0000	
9236595	PLATE SETTING GEAR DRIVE (AL ALLOY) (ALT)	Part	ASTM-B209	/2024-T4////			1.0000	
9236594	RIVET FLATHEAD (AL ALLOY)	Part	ASTM-B316	/2117-T4////			4.0000	
9236592	SHAFT SETTING (AL ALLOY)	Part	ASTM-B211	/7075-T6////			1.0000	
9236590	PINION SETTING (STAINLESS STEEL)	Part	ASTM-A581	/416////			1.0000	
9236590	PINION SETTING (STAINLESS STEEL) (ALT)	Part	ASTM-A581	/416SE////			1.0000	
9236484	SETTING GEAR & PINION ASSY	Component					2.0000	
9236591	GEAR SETTING (CU-BE ALLOY)	Part	ASTM-B194				2.0000	
9236711	TIMER ASSY	Component					1.0000	
9236688	HOUSING BARREL TIMER (STAINLESS STEEL)	Part	ASTM-A582	/416////			1.0000	
9236707	WASHER SPRING TIMER (STAINLESS STEEL)	Part	AMS-5529				1.0000	
9236707	WASHER SPRING TIMER (STAINLESS STEEL) (ALT)	Part	ASTM-A313	/631////			1.0000	
9236681	PLATE #6 TIMER (AL ALLOY)	Part	ASTM-B211	/2024-T4////			1.0000	
9236681	PLATE #6 TIMER (AL ALLOY) (ALT)	Part	ASTM-B211	/7075-T6////			1.0000	

USADACS - MIDAS DETAILED STRUCTURE FOR A MUNITION (LESS BULK ITEMS)

Nomenclature: FUZE MTSQ M582
NSN: 1390001695864 DODIC: N286 Reported Weight: 1.5100 LB

DRAWING #	NOMENCLATURE	TYPE	SPECIFICATION	TGCS	-- REPORTED --- WEIGHT	UNIT	FACTOR	FACTORED WEIGHT(LB)
9236681	PLATE #6 TIMER (AL ALLOY) (ALT)	Part	ASTM-B209	/2024-T4////			1.0000	
9236881	PLATE #6 TIMER (AL ALLOY) (ALT)	Part	ASTM-B209	/2024-T3////			1.0000	
9236681	PLATE #6 TIMER (AL ALLOY) (ALT)	Part	ASTM-B209	/7075-T6////			1.0000	
9236684	KEEPER TUMBLER TIMER (BRS)	Part	ASTM-B36				2.0000	
9236684	KEEPER TUMBLER TIMER (STAINLESS STEEL) (ALT)	Part	ASTM-A167	/301////			2.0000	
9236671	PLATE #5 TIMER (AL ALLOY)	Part	ASTM-B209	/2024-T3////			1.0000	
9236671	PLATE #5 TIMER (AL ALLOY) (ALT)	Part	ASTM-B209	/2024-T4////			1.0000	
9236660	PLATE #3 TIMER (AL ALLOY)	Part	ASTM-B209	/2024-T3////			1.0000	
9236660	PLATE #3 TIMER (AL ALLOY) (ALT)	Part	ASTM-B209	/2024-T4////			1.0000	
9236659	PLATE #2 TIMER (AL ALLOY)	Part	ASTM-B209	/2024-T3////			1.0000	
9236659	PLATE #2 TIMER (AL ALLOY) (ALT)	Part	ASTM-B209	/2024-T4////			1.0000	
9236682	TUMBLER INTERNAL TAB TIMER (STAINLESS STEEL)	Part	ASTM-A177	/301////			1.0000	
9236683-2	TUMBLER TIMER (STAINLESS STEEL)	Part	QQ-S-766	/301////			3.0000	
9236683-2	TUMBLER TIMER (STAINLESS STEEL) (ALT)	Part	QQ-S-766	/304////			3.0000	
9236683-2	TUMBLER TIMER (STAINLESS STEEL) (ALT)	Part	QQ-S-766	/304L////			3.0000	
9236683-2	TUMBLER TIMER (STAINLESS STEEL) (ALT)	Part	QQ-S-766	/305////			3.0000	
9236683-1	TUMBLER TIMER (STAINLESS STEEL)	Part	QQ-S-766	/301////			1.0000	
9236683-1	TUMBLER TIMER (STAINLESS STEEL) (ALT)	Part	QQ-S-766	/304////			1.0000	
9236683-1	TUMBLER TIMER (STAINLESS STEEL) (ALT)	Part	QQ-S-766	/304L////			1.0000	
9236683-1	TUMBLER TIMER (STAINLESS STEEL) (ALT)	Part	QQ-S-766	/305////			1.0000	
9236689	SCREW MACHINE FILLISTER HEAD TIMER (STAINLESS ST	Part	ASTM-A580	/302////			3.0000	
9236689	SCREW MACHINE FILLISTER HEAD TIMER (STAINLESS ST	Part	ASTM-A580	/304////			3.0000	
9236689	SCREW MACHINE FILLISTER HEAD TIMER (STAINLESS ST	Part	ASTM-A493	/305////			3.0000	
9236689	SCREW MACHINE FILLISTER HEAD TIMER (STAINLESS ST	Part	ASTM-A493	/384////			3.0000	
9236689	SCREW MACHINE FILLISTER HEAD TIMER (STAINLESS ST	Part	ASTM-A581	/303////			3.0000	
9236522	RETAINER SETBACK SPRING (PLASTIC/POLYESTER)	Part	L-P-377	/1////			1.0000	
9236705	SPRING SETBACK TIMER (STAINLESS STEEL)	Part	ASTM-A313				1.0000	
9236687	PLUG EXPANSION TIMER (BRS)	Part	COMMERCIAL				1.0000	
9236690	TIMING SCROLL ASSY TIMER	Component					1.0000	
9271993	SCROLL TIMING TIMER (AL ALLOY)	Part	QQ-A-591	/A380////			1.0000	
9271993	SCROLL TIMING TIMER (AL ALLOY) (ALT)	Part	QQ-A-591	/SC114A////			1.0000	
9236698	MAINSPRING & BARREL ASSY TIMER	Component					1.0000	
9236698	BARREL MAINSPRING TIMER (STAINLESS STEEL)	Part	ASTM-A167	/301////			1.0000	
9236698	BARREL MAINSPRING TIMER (STAINLESS STEEL) (A	Part	ASTM-A167	/302////			1.0000	
9236698	BARREL MAINSPRING TIMER (STAINLESS STEEL) (A	Part	ASTM-A167	/304////			1.0000	
9236699	MAINSPRING TIMER (STAINLESS STEEL)	Part	QQ-S-766	/301////			1.0000	
9236699	MAINSPRING TIMER (STAINLESS STEEL) (ALT)	Part	MIL-S-5059	/301////			1.0000	
9236691	RING GEAR SUPPORT & SHAFT ASSY TIMER	Component					1.0000	
9236695	SHAFT RING GEAR TIMER (STAINLESS STEEL)	Part	ASTM-A581	/416////			1.0000	
9236695	SHAFT RING GEAR TIMER (STAINLESS STEEL) (ALT	Part	ASTM-A581	/416SE////			1.0000	
9236692	RING GEAR & SUPPORT ASSY TIMER	Component					1.0000	
9236693	SUPPORT RING GEAR TIMER (AL ALLOY)	Part	ASTM-B209	/2024-T4////			1.0000	
9236693	SUPPORT RING GEAR TIMER (AL ALLOY) (ALT)	Part	ASTM-B209	/6061-T6////			1.0000	
9236693	SUPPORT RING GEAR TIMER (AL ALLOY) (ALT)	Part	ASTM-B211	/2011-T3////			1.0000	
9236693	SUPPORT RING GEAR TIMER (AL ALLOY) (ALT)	Part	ASTM-B211	/2024-T4////			1.0000	
9236694	GEAR RING TIMER (CU-BE ALLOY)	Part	ASTM-B194	/170////			1.0000	
9236694	GEAR RING TIMER (CU-BE ALLOY) (ALT)	Part	ASTM-B194	/172////			1.0000	
9236678	GEAR #2 & PINION ASSY	Component					1.0000	
9236680	PINION #2 TIMER (STAINLESS STEEL)	Part	ASTM-A581	/416////			1.0000	
9236680	PINION #2 TIMER (STAINLESS STEEL) (ALT)	Part	ASTM-A581	/416SE////			1.0000	
9236679	GEAR #2 TIMER (CU-BE ALLOY)	Part	ASTM-B194				1.0000	
9236668	PLATE #4 & BEARING ASSY TIMER	Component					1.0000	
9236669	PLATE #4 TIMER (STAINLESS STEEL)	Part	ASTM-A176	/410////			1.0000	

USADACS - MIDAS DETAILED STRUCTURE FOR A MUNITION (LESS BULK ITEMS)

Nomenclature: FUZE MTSQ M582
NSN: 1390001695864 DODIC: N286 Reported Weight: 1.5100 LB

DRAWING #	NOMENCLATURE	TYPE	SPECIFICATION	TGCS	-- REPORTED --- WEIGHT	UNIT	FACTOR	FACTORED WEIGHT(LB)
9236669	PLATE #4 TIMER (STAINLESS STEEL) (ALT)	Part	ASTM-A176	/301////			1.0000	
9236669	PLATE #4 TIMER (STAINLESS STEEL) (ALT)	Part	ASTM-A167	/302////			1.0000	
9236669	PLATE #4 TIMER (STAINLESS STEEL) (ALT)	Part	ASTM-A167	/304////			1.0000	
9236670	BEARING TIMER (BRS)	Part	ASTM-B16	/H04////			1.0000	
9236670	BEARING TIMER (BRS) (ALT)	Part	ASTM-B16	/H02////			1.0000	
9236712	PLATE #1 ASSY TIMER	Component					1.0000	
9236636	PLATE #1 TIMER (AL ALLOY)	Part	ASTM-B211	/2011-T3////			1.0000	
9236639	BUSHING PLATE #1 TIMER (STAINLESS STEEL)	Part	ASTM-A581	/416////			1.0000	
9236639	BUSHING PLATE #1 TIMER (STAINLESS STEEL) (ALT)	Part	ASTM-A581	/416SE////			1.0000	
9236637	PIN DOWEL TIMER (STAINLESS STEEL)	Part	ASTM-A581	/416////			1.0000	
9236637	PIN DOWEL TIMER (STAINLESS STEEL) (ALT)	Part	ASTM-A581	/416SE////			1.0000	
9236637	PIN DOWEL TIMER (STAINLESS STEEL) (ALT)	Part	ASTM-A580	/410////			1.0000	
9236643	SUPPORT INTERMEDIATE TIMER (AL ALLOY)	Part	ASTM-B211	/2017-T4////			1.0000	
9236643	SUPPORT INTERMEDIATE TIMER (AL ALLOY) (ALT)	Part	ASTM-B211	/2024-T4////			1.0000	
9236713	TUBE HAIRSPRING TIMER (STAINLESS STEEL)	Part	ASTM-A511	//MT416SE///			1.0000	
9236713	TUBE HAIRSPRING TIMER (STAINLESS STEEL) (ALT)	Part	ASTM-A511	//MT410///			1.0000	
9236713	TUBE HAIRSPRING TIMER (STAINLESS STEEL) (ALT)	Part	ASTM-A581	/416////			1.0000	
9236713	TUBE HAIRSPRING TIMER (STAINLESS STEEL) (ALT)	Part	ASTM-A581	/416SE////			1.0000	
9236638	PIN DOWEL TIMER (STAINLESS STEEL)	Part	ASTM-A581	/416////			1.0000	
9236638	PIN DOWEL TIMER (STAINLESS STEEL) (ALT)	Part	ASTM-A581	/416SE////			1.0000	
9236638	PIN DOWEL TIMER (STAINLESS STEEL) (ALT)	Part	ASTM-A580	/410////			1.0000	
9236718	BALANCE WHEEL STAFF & HAIRSPRING ASSY	Component					1.0000	
9236719	HAIRSPRING TIMER (FE ALLOY)	Part	AMS-5225	/902////			1.0000	
9236720	BALANCE WHEEL ASSY TIMER	Component					1.0000	
9236721	PIVOT HAIRSPRING TIMER (INCONEL ALLOY)	Part	COMMERCIAL	/X-750////			1.0000	
9236652	WHEEL BALANCE TIMER (STAINLESS STEEL)	Part	ASTM-A177	/301////			1.0000	
9236652	WHEEL BALANCE TIMER (STAINLESS STEEL) (ALT	Part	ASTM-A177	/302////			1.0000	
9236648	BALANCE STAFF & PIN ASSY TIMER	Component					1.0000	
9236650	PIN TIMER (STAINLESS STEEL)	Part	ASTM-A313	/631////			2.0000	
9236651	STAFF BALANCE TIMER (AL ALLOY)	Part	ASTM-B211	/2011-T3////			1.0000	
9236651	STAFF BALANCE TIMER (AL ALLOY) (ALT)	Part	ASTM-B211	/2017-T4////			1.0000	
9236651	STAFF BALANCE TIMER (AL ALLOY) (ALT)	Part	ASTM-B211	/2024-T4////			1.0000	
9236714	SUPPORT & PIVOT ASSY TIMER	Component					1.0000	
9236715	SUPPORT END TIMER (STAINLESS STEEL)	Part	ASTM-A581	/416////			1.0000	
9236715	SUPPORT END TIMER (STAINLESS STEEL) (ALT)	Part	ASTM-A581	/416SE////			1.0000	
9236716	PIVOT HAIRSPRING TIMER (INCONEL ALLOY)	Part	COMMERCIAL	/X-750////			1.0000	
9236640	SETTING RING GEAR ASSY TIMER	Component					1.0000	
9236642-1	GEAR SETTING RING TIMER (STAINLESS STEEL)	Part	ASTM-A167	/301////			2.0000	
9236642-2	GEAR SETTING RING TIMER (STAINLESS STEEL) (A	Part	ASTM-A177	/301////			3.0000	
9236641	PIN DOWEL RING GEAR TIMER (STAINLESS STEEL)	Part	ASTM-A581	/416////			2.0000	
9236641	PIN DOWEL RING GEAR TIMER (STAINLESS STEEL)	Part	ASTM-A581	/416SE////			2.0000	
9236675	GEAR #1 & PINION ASSY TIMER	Component					1.0000	
9236677	PINION #1 TIMER (STAINLESS STEEL)	Part	ASTM-A581	/416////			1.0000	
9236677	PINION #1 TIMER (STAINLESS STEEL) (ALT)	Part	ASTM-A581	/416SE////			1.0000	
9236676	GEAR #1 TIMER (CU-BE ALLOY)	Part	ASTM-B194				1.0000	
9236661	LEVER ASSY TIMER	Component					1.0000	
9236663	LEVER STAFF ASSY TIMER	Component					1.0000	
9236650	PIN TIMER (STAINLESS STEEL)	Part	ASTM-A313	/631////			1.0000	
9236664	STAFF LEVER TIMER (AL ALLOY)	Part	ASTM-B211	/2024-T4////			1.0000	
9236664	STAFF LEVER TIMER (AL ALLOY) (ALT)	Part	ASTM-B211	/2011-T3////			1.0000	
9236665	PALLET SUPPORT & PIN ASSY TIMER	Component					2.0000	
9236666	PIN PALLET TIMER (STAINLESS STEEL)	Part	ASTM-A313	/631////			1.0000	
9236667	SUPPORT PALLET TIMER (AL ALLOY)	Part	ASTM-B211	/2011-T3////			1.0000	

USADACS - MIDAS DETAILED STRUCTURE FOR A MUNITION (LESS BULK ITEMS)

Nomenclature: FUZE MTSQ M582
NSN: 1390001695864 DODIC: N286 Reported Weight: 1.5100 LB

DRAWING #	NOMENCLATURE	TYPE	SPECIFICATION	TGCS	-- REPORTED --- WEIGHT	UNIT	FACTOR	FACTORED WEIGHT(LB)
9236667	SUPPORT PALLET TIMER (AL ALLOY) (ALT)	Part	ASTM-B211	/2024-T4////			1.0000	
9236672	ESCAPE WHEEL & PINION ASSY TIMER	Component					1.0000	
9236673	PINION ESCAPE TIMER (STAINLESS STEEL)	Part	ASTM-A581	/416////			1.0000	
9236673	PINION ESCAPE TIMER (STAINLESS STEEL) (ALT)	Part	ASTM-A581	/416SE////			1.0000	
9236674	WHEEL ESCAPE TIMER (CU-BE ALLOY)	Part	ASTM-B194				1.0000	
9236702	SETBACK PIN ASSY TIMER	Component					1.0000	
9236703	PIN SETBACK TIMER (AL ALLOY)	Part	ASTM-B211	/2011-T3////			1.0000	
9236704	DISC SETBACK PIN TIMER (PB ALLOY)	Part	QQ-L-201				1.0000	
9236656	SPRING & DETENT ASSY TIMER	Component					1.0000	
9236657	DETENT SPIN TIMER (ZN ALLOY)	Part	ASTM-B86	/AG40A////			1.0000	
9236658	SPRING DETENT TIMER (STAINLESS STEEL)	Part	ASTM-A580	/302////			1.0000	
9236658	SPRING DETENT TIMER (STAINLESS STEEL) (ALT)	Part	ASTM-A313	/302////			1.0000	
9236630	SLEEVE ASSY	Component					1.0000	
9236631	SLEEVE (AL ALLOY)	Part	ASTM-B210	/2024-T3////			1.0000	
9236631	SLEEVE (AL ALLOY) (ALT)	Part	ASTM-B211	/2024T351////			1.0000	
9236631	SLEEVE (AL ALLOY) (ALT)	Part	ASTM-B221	/2014-T6////			1.0000	
9236631	SLEEVE (AL ALLOY) (ALT)	Part	ASTM-B247	/2014-T6////			1.0000	
9236632	KEY SLEEVE (STAINLESS STEEL)	Part	ASTM-A176	/410////			1.0000	
9236632	KEY SLEEVE (STAINLESS STEEL) (ALT)	Part	ASTM-A176	/410S////			1.0000	
9236603	TRIGGER ASSY	Component					1.0000	
9236626	SPRING DETENT TRIGGER (STAINLESS STEEL)	Part	ASTM-A313	/302////			1.0000	
9236608	PLATE TOP TRIGGER (STAINLESS STEEL)	Part	ASTM-A167	/301////			1.0000	
9236608	PLATE TOP TRIGGER (STAINLESS STEEL) (ALT)	Part	ASTM-A177	/301////			1.0000	
9236627	PLATE BOTTOM TRIGGER (STAINLESS STEEL)	Part	ASTM-A167	/301////			1.0000	
9236627	PLATE BOTTOM TRIGGER (STAINLESS STEEL) (ALT)	Part	ASTM-A177	/301////			1.0000	
9236623	PIN FIRING TRIGGER (STAINLESS STEEL)	Part	ASTM-A581	/416////			1.0000	
9236623	PIN FIRING TRIGGER (STAINLESS STEEL) (ALT)	Part	ASTM-A581	/416SE////			1.0000	
9236628	RIVET TRIGGER (STAINLESS STEEL)	Part	ASTM-A493	/302////			2.0000	
9236628	RIVET TRIGGER (STAINLESS STEEL) (ALT)	Part	ASTM-A493	/XM-7////			2.0000	
9236628	RIVET TRIGGER (STAINLESS STEEL) (ALT)	Part	ASTM-A581	/303////			2.0000	
9236628	RIVET TRIGGER (STAINLESS STEEL) (ALT)	Part	ASTM-A581	/303SE////			2.0000	
9236624	SPRING FIRING PIN TRIGGER (STAINLESS STEEL)	Part	ASTM-A313				1.0000	
9236625	INSERT TRIGGER (AL ALLOY)	Part	ASTM-B211	/2011-T3////			1.0000	
9236625	INSERT TRIGGER (AL ALLOY) (ALT)	Part	ASTM-B211	/2017-T4////			1.0000	
9236625	INSERT TRIGGER (AL ALLOY) (ALT)	Part	ASTM-B211	/2024-T4////			1.0000	
9236609	FIRING ARM ASSY TRIGGER	Component					1.0000	
MS51923-188	PIN SPRING TUBULAR COILED STD DUTY (STAINLESS	Part	MIL-P-10971				1.0000	
9236613	ARM FIRING TRIGGER (STAINLESS STEEL)	Part	ASTM-A176	/410////			1.0000	
9236611	SHAFT FIRING ARM TRIGGER (STAINLESS STEEL)	Part	ASTM-A581	/416////			1.0000	
9236611	SHAFT FIRING ARM TRIGGER (STAINLESS STEEL) (AL	Part	ASTM-A581	/416SE////			1.0000	
9236610	SPRING TORSION TRIGGER (STAINLESS STEEL)	Part	ASTM-A313				1.0000	
9236614	DETENT ASSY TRIGGER	Component					1.0000	
9236616	LEVER DETENT TRIGGER (STAINLESS STEEL)	Part	ASTM-A177	/301////			1.0000	
9236616	LEVER DETENT TRIGGER (STAINLESS STEEL) (ALT)	Part	MIL-S-5059	/301////			1.0000	
9236615	ROTOR DETENT TRIGGER (STAINLESS STEEL)	Part	ASTM-A581	/416////			1.0000	
9236615	ROTOR DETENT TRIGGER (STAINLESS STEEL) (ALT)	Part	ASTM-A581	/416SE////			1.0000	
9236617	FIRING SAFETY PLATE ASSY TRIGGER	Component					1.0000	
9357826	SHAFT SAFETY PLATE ASSY TRIGGER (AL ALLOY)	Part	ASTM-B211	/2024-T4////			1.0000	
9236618	PLATE SAFETY TRIGGER (STAINLESS STEEL)	Part	ASTM-A176	/410////			1.0000	
9236618	PLATE SAFETY TRIGGER (STAINLESS STEEL) (ALT)	Part	ASTM-A176	/410S////			1.0000	
9236620	SAFE SEPARATION RELEASE ASSY TRIGGER	Component					1.0000	
9236621	LEVER RELEASE TRIGGER (STAINLESS STEEL)	Part	MIL-S-25043				1.0000	
9236621	LEVER RELEASE TRIGGER (STAINLESS STEEL) (ALT)	Part	AMS-5528				1.0000	

USADACS - MIDAS DETAILED STRUCTURE FOR A MUNITION (LESS BULK ITEMS)

Nomenclature: FUZE MTSQ M582
NSN: 1390001695864 DODIC: N286 Reported Weight: 1.5100 LB

DRAWING #	NOMENCLATURE	TYPE	SPECIFICATION	TGCS	-- REPORTED --- WEIGHT	UNIT	FACTOR	FACTORED WEIGHT(LB)
9357827	SPACER TRIGGER ASSY	Component					1.0000	
9357827-1	SPACER TRIGGER (PLASTIC)	Part	MIL-P-46174	///40//			1.0000	
9236487	PIN SPACER TRIGGER (STAINLESS STEEL)	Part	ASTM-A581	/416////			4.0000	
9236487	PIN SPACER TRIGGER (STAINLESS STEEL) (ALT)	Part	ASTM-A581	/416SE////			4.0000	
9236573	COUNTER ASSY	Component					1.0000	
9236577	WHEEL #1 COUNTER (POLYETHYLENE PLASTIC)	Part	MIL-P-81390	/2////			1.0000	
9236577	WHEEL #1 COUNTER (PLASTIC) (ALT)	Part	ASTM-D3935				1.0000	
9236578	WHEEL #2 COUNTER (POLYETHYLENE PLASTIC)	Part	MIL-P-81390	/2////			1.0000	
9236578	WHEEL #2 COUNTER (PLASTIC) (ALT)	Part	ASTM-D3935				1.0000	
9236579	WHEEL #3 COUNTER (POLYETHYLENE PLASTIC)	Part	MIL-P-81390	/2////			1.0000	
9236579	WHEEL #3 COUNTER (PLASTIC) (ALT)	Part	ASTM-D3935				1.0000	
9236582	RING RETAINING COUNTER (AL ALLOY)	Part	ASTM-B209	/2024-T4////			1.0000	
9236582	RING RETAINING COUNTER (AL ALLOY) (ALT)	Part	ASTM-B209	/6061-T6////			1.0000	
9236581	SPACER COUNTER (ZN ALLOY)	Part	ASTM-B86	/AG40A////			1.0000	
9236580	PINION COUNTER (ZN ALLOY)	Part	ASTM-B86	/AG40A////			2.0000	
9236574	BODY ASSY COUNTER	Component					1.0000	
9345286	BODY COUNTER (ZN ALLOY)	Part	ASTM-B86	/AG40A////			1.0000	
9236576	SHAFT PINION COUNTER (STAINLESS STEEL)	Part	ASTM-A581	/416////			1.0000	
9236576	SHAFT PINION COUNTER (STAINLESS STEEL) (ALT)	Part	ASTM-A581	/416SE////			1.0000	
9236576	SHAFT PINION COUNTER (STAINLESS STEEL) (ALT)	Part	ASTM-A581	/303////			1.0000	
9236565	FUZE MILD DETONATING	Component					1.0000	
9236488	FUZE CORD	Component					1.0000	
	PEP (RDX)	Part	MIL-R-398	/2//7//	2.0000	GR	1.0000	0.00028600
	RDX (100.00%)	Compound	MIL-R-398	/2//7//				
9236488*1	INNER JACKET (ANTIMONIAL PB)	Part	COMMERCIAL				1.0000	
9236488*2	OUTER JACKET (PLASTIC)	Part	9236469				1.0000	
9236561	DETONATOR HOLDER ASSY	Component					1.0000	
9345287	HOLDER DETONATOR (PLASTIC)	Part	L-P-393				1.0000	
9236563	PLATE FIRING (STAINLESS STEEL)	Part	ASTM-A177	/301////			1.0000	
8798331	DETONATOR STAB M55 ASSY	Component	MIL-D-14978				1.0000	
8798332	CUP DETONATOR (AL ALLOY)	Part	ASTM-B209	//1100///			1.0000	
8798333	DISC CLOSING (AL FOIL)	Part	QQ-A-1876				1.0000	
8798333	DISC CLOSING (AL ALLOY) (ALT)	Part	ASTM-B209	//1100///			1.0000	
	PEP (PRIMER MIX NOL #130*9)	Part			0.2300	GR	1.0000	0.00003300
	PB STYPHNATE (40.00%)	Compound	MIL-L-16355	/2////				
	PB AZIDE (20.00%)	Compound	MIL-L-3055					
	TETRACENE (5.00%)	Compound	MIL-T-46938					
	BA NITRATE (20.00%)	Compound	MIL-B-162	///1//				
	SB SULFIDE (15.00%)	Compound	MIL-A-159	///5//				
	PEP (PB AZIDE)	Part	MIL-L-46225		0.7900	GR	1.0000	0.00011300
	PB AZIDE (100.00%)	Compound	MIL-L-46225					
	PEP (PB AZIDE) (ALT)	Part	MIL-L-14758		0.7900	GR	1.0000	
	PB AZIDE (100.00%)	Compound	MIL-L-14758					
	PEP (RDX)	Part	MIL-R-398	/1////	0.2900	GR	1.0000	0.00004100
	RDX (100.00%)	Compound	MIL-R-398	/1////				
	PEP (PRIMER MIX NOL #130*4) (ALT)	Part			15.0000	MG	1.0000	
	PB STYPHNATE (40.00%)	Compound	MIL-L-757					
	PB AZIDE (20.00%)	Compound	MIL-L-14758					
	TETRACENE (5.00%)	Compound	MIL-T-46938					
	BA NITRATE (20.00%)	Compound	MIL-B-162	///1//				
	SB SULFIDE (15.00%)	Compound	MIL-A-159					
	PEP (PRIMER MIX NOL #130*5) (ALT)	Part			15.0000	MG	1.0000	
	PB STYPHNATE (40.00%)	Compound	MIL-L-757					

USADACS - MIDAS DETAILED STRUCTURE FOR A MUNITION (LESS BULK ITEMS)

Nomenclature: FUZE MTSQ M582
NSN: 1390001695864 DODIC: N286 Reported Weight: 1.5100 LB

DRAWING #	NOMENCLATURE	TYPE	SPECIFICATION	TGCS	-- REPORTED --- WEIGHT	UNIT	FACTOR	FACTORED WEIGHT(LB)
	PB AZIDE (20.00%)	Compound	MIL-L-46225					
	TETRACENE (5.00%)	Compound	MIL-T-46938					
	BA NITRATE (20.00%)	Compound	MIL-B-162	///1//				
	SB SULFIDE (15.00%)	Compound	MIL-A-159					
9236511-2	OGIVE ASSY	Component					1.0000	
9236512-2	OGIVE (AL ALLOY)	Part	ASTM-B247	/2014-T6////			1.0000	
9236512-2	OGIVE (AL ALLOY) (ALT)	Part	ASTM-B211	/2024-T6////			1.0000	
9236512-2	OGIVE (AL ALLOY) (ALT)	Part	ASTM-B211	/T651////			1.0000	
9236512-2	OGIVE (AL ALLOY) (ALT)	Part	ASTM-B211	/2024-T4////			1.0000	
9236512-2	OGIVE (AL ALLOY) (ALT)	Part	ASTM-B211	/T351////			1.0000	
9236512-2	OGIVE (AL ALLOY) (ALT)	Part	ASTM-B211	/T6////			1.0000	
9236512-2	OGIVE (AL ALLOY) (ALT)	Part	ASTM-B211	/T851////			1.0000	
9236513	WINDOW OGIVE (PLASTIC)	Part	ASTM-D3935				1.0000	
9236729	SETTING KEY ASSY	Component					1.0000	
9236730	TUBE CRUSH (BRS)	Part	ASTM-B135	/260////			1.0000	
9236517	KEY SETTING (AL ALLOY)	Part	ASTM-B211	/2024-T4////			1.0000	
9236731	PLUG RETAINER (STAINLESS STEEL)	Part	ASTM-A581	/416////			1.0000	
9236731	PLUG RETAINER (STAINLESS STEEL) (ALT)	Part	ASTM-A581	/416SE////			1.0000	
								0.05270900

USADACS - MIDAS DETAILED STRUCTURE FOR A MUNITION (LESS BULK ITEMS)

06/09/97

Nomenclature: FUZE PD M557

NSN: 1390001875392 DODIC: N335 Reported Weight: 2.1200 LB

DRAWING #	NOMENCLATURE	TYPE	SPECIFICATION	TGCS	-- REPORTED --- WEIGHT	UNIT	FACTOR	FACTORED WEIGHT(LB)
8863535	FUZE PD M557	Munition	MIL-F-60998		2.1200	LB	1.0000	
8863535	FUZE PD M557	Component	MIL-F-60998		2.1200	LB	1.0000	
8595541	BOOSTER M125A1 ASSY	Component	MIL-B-46654		0.7100	LB	1.0000	
8595509	CUP BOOSTER (AL ALLOY)	Part	ASTM-B209	//1100///			1.0000	
8595509	CUP BOOSTER (AL ALLOY) (ALT)	Part	MIL-A-12545				1.0000	
8595510	PELLET BOOSTER (TETRYL PELLETS (TETRYL 98%))	Part	MIL-P-46464	/2////	351.0000	GR	1.0000	0.05014400
	GRAPHITE (0.50%)	Compound	MIL-G-155	//1 OR 2///				
	TETRYL (MIN) (98.00%)	Compound	MIL-T-339					
	BA STEARATE (0.75%)	Compound	MIL-B-366					
	CA STEARATE (0.75%)	Compound	MIL-C-263					
8594668	BOOSTER SUB ASSY	Component					1.0000	
8595536	COVER DUST (POLYETHYLENE PLASTIC)	Part	L-P-390	/1/1/L//			1.0000	
8594650	DETENT ROTOR (BRS)	Part	ASTM-B36				2.0000	
8594650	DETENT ROTOR (BRS) (ALT)	Part	ASTM-B121				2.0000	
8594650	DETENT ROTOR (BRS) (ALT)	Part	ASTM-B121	///B//			2.0000	
8594654	SPRING RH DETENT (STAINLESS STEEL)	Part	ASTM-A313				1.0000	
8594654	SPRING RH DETENT (STAINLESS STEEL) (ALT)	Part	AMS-5673A	//COND C///			1.0000	
8594657	SPRING LH DETENT (STAINLESS STEEL)	Part	ASTM-A313				1.0000	
8594657	SPRING LH DETENT (STAINLESS STEEL) (ALT)	Part	AMS-5673A	//COND C///			1.0000	
10522374	PLATE MOVEMENT (BRS)	Part	ASTM-B36				1.0000	
10522374	PLATE MOVEMEMT (BRS) (ALT)	Part	ASTM-B121				1.0000	
8595534	SCREW PLATE (BRS)	Part	ASTM-B16				3.0000	
8595534	SCREW PLATE (BRS) (ALT)	Part	ASTM-B134				3.0000	
8594658	ROTOR ASSY	Component					1.0000	
8595533	PIN ROTOR GEAR (BRS)	Part	ASTM-B16				2.0000	
8595533	PIN ROTOR GEAR (BRS) (ALT)	Part	ASTM-B134				2.0000	
8595532	GEAR ROTOR (BRS)	Part	ASTM-B121				1.0000	
8595532	GEAR ROTOR (BRS) (ALT)	Part	ASTM-B36				1.0000	
8594660	ROTOR (BRS)	Part	ASTM-B282	///B//			1.0000	
8594660	ROTOR (BRS) (ALT)	Part	ASTM-B16				1.0000	
8595535	CUSHION DETONATOR (CORK)	Part	HH-C-576				1.0000	
8797749	DETONATOR M17 ASSY	Component	MIL-D-46406				1.0000	
	PEP (PB AZIDE)	Part	MIL-L-3055	/1////	4.0800	GR	1.0000	0.00058300
	PB AZIDE (100.00%)	Compound	MIL-L-3055	/1////				
	PEP (TETRYL)	Part	MIL-T-339	//1/A//	1.2300	GR	1.0000	0.00017600
	TETRYL (100.00%)	Compound	MIL-T-339	//1/A//				
8797745-3	CUP DETONATOR (AL ALLOY)	Part	QQ-A-561	//1100///	4.5000	GR	1.0000	0.00064300
8795797-1	DISC DETONATOR (AL ALLOY)	Part	QQ-A-561	//1100///	0.3000	GR	1.0000	0.00004300
8797036-1	DISC DETONATOR CLOSING (AL ALLOY)	Part	QQ-A-561	//1100///	0.1800	GR	1.0000	0.00002600
8594614	BALANCE STAFF ASSY	Component					1.0000	
8595540	PIN BALANCE (STAINLESS STEEL)	Part	QQ-S-763	///410//			2.0000	
8595540	PIN BALANCE (STAINLESS WIRE) (ALT)	Part	QQ-W-423	///410//			2.0000	
8595540	PIN BALANCE (STAINLESS STEEL) (ALT)	Part	ASTM-A581	//COND T/416//			2.0000	
8594635	STAFF BALANCE (STAINLESS STEEL)	Part	ASTM-A581	//COND T/416//			1.0000	
8594618	BALANCE (BRS)	Part	ASTM-B16				1.0000	
8594618	BALANCE (BRS) (ALT)	Part	ASTM-B134				1.0000	
8594618	BALANCE (BRS) (ALT)	Part	ASTM-B36				1.0000	
8594618	BALANCE (BRS) (ALT)	Part	ASTM-B121				1.0000	
8595538	ESCAPE WHEEL ASSY	Component					1.0000	
8594636	PINION ESCAPEMENT (STAINLESS STEEL)	Part	ASTM-A581	//COND T/416//			1.0000	
8594636	PINION ESCAPEMENT (STAINLESS WIRE) (ALT)	Part	MIL-W-52263				1.0000	
8595539	WHEEL ESCAPE (CU-BE ALLOY)	Part	QQ-C-533				1.0000	

USADACS - MIDAS DETAILED STRUCTURE FOR A MUNITION (LESS BULK ITEMS)

Nomenclature: FUZE PD M557
NSN: 1390001875392 DODIC: N335 Reported Weight: 2.1200 LB

DRAWING #	NOMENCLATURE	TYPE	SPECIFICATION	TGCS	-- REPORTED --- WEIGHT	UNIT	FACTOR	FACTORED WEIGHT(LB)
8594673	GEAR & PINION #1 ASSY	Component					1.0000	
8594678	GEAR #1 (BRS)	Part	ASTM-B121				1.0000	
8594678	GEAR #1 (BRS) (ALT)	Part	ASTM-B36				1.0000	
8594674	PINION #1 (STAINLESS STEEL)	Part	ASTM-A581	//COND T/416//			1.0000	
8594681	GEAR & PINION #2 ASSY	Component					1.0000	
8595507	GEAR #2 (BRS)	Part	ASTM-B121				1.0000	
8595507	GEAR #2 (BRS) (ALT)	Part	ASTM-B36				1.0000	
8594685	PINION #2 (STAINLESS STEEL)	Part	ASTM-A581	//COND T/416//			1.0000	
8595511	BODY ASSY	Component					1.0000	
8595537	BODY (BRS)	Part	ASTM-B283				1.0000	
8595537	BODY (BRS) (ALT)	Part	ASTM-B16				1.0000	
8595530	SHAFT ROTOR (STAINLESS STEEL)	Part	ASTM-A581	//COND T/416//			1.0000	
8595530	SHAFT ROTOR (STEEL) (ALT)	Part	ASTM-A108				1.0000	
8595528	PIN ROTOR STOP (STAINLESS STEEL)	Part	ASTM-A581	//COND T/416//			1.0000	
8595512	PIN DETENT PIVOT (STAINLESS STEEL)	Part	ASTM-A581	//COND T/416//			2.0000	
8595512	PIN DETENT PIVOT (STEEL) (ALT)	Part	ASTM-A108				2.0000	
8595529	PIN DETENT SPRING (STAINLESS STEEL)	Part	ASTM-A581	//COND T/416//			2.0000	
8595506	CLOSING CUP ASSY	Component					1.0000	
	PEP (CHG TETRYL)	Part			3.7800	GR	1.0000	0.00054000
	TETRYL (98.00%)	Compound	MIL-T-339	//A///				
	GRAPHITE (2.00%)	Compound	MIL-G-48771	//1,2///				
8595508	CUP CLOSING (BRS)	Part	ASTM-B36	//210///			1.0000	
8798219	FUZE PD LOADING M48A3 ASSY	Component	MIL-F-60348		1.4100	LB	1.0000	
8798221	TUBE FLASH (STEEL TUBING)	Part	QQ-T-830	//1137///			1.0000	
8798221	TUBE FLASH (STEEL) (ALT)	Part	ASTM-A108	//1035///			1.0000	
8798221	TUBE FLASH (STEEL) (ALT)	Part	AMS-5082				1.0000	
9234456	SCREW BOTTOM CLOSING (AL ALLOY)	Part	ASTM-B211	//2024///			1.0000	
8798220	OGIVE (STEEL)	Part	ASTM-A109				1.0000	
8798232	HEAD LOADING ASSY	Component					1.0000	
8798233	CUSHION DETONATOR (CORK)	Part	HH-C-576				1.0000	
8798234	SCREW DET RETAINING (AL ALLOY)	Part	ASTM-B211				1.0000	
8798234	SCREW DET RETAINING (AL ALLOY) (ALT)	Part	ASTM-B221				1.0000	
8798235	MPTS HEAD ASSY	Component					1.0000	
8798236	DISC CLOSING (AL ALLOY)	Part	ASTM-B209	//1100///			1.0000	
8798237	HEAD (AL ALLOY)	Part	ASTM-B211	//2011-T3///			1.0000	
8798238	SUPPORT FIRING PIN (BRS)	Part	ASTM-B36	//210///			1.0000	
8798239	WASHER CLOSING DISC (AL ALLOY)	Part	ASTM-B209				1.0000	
9234572	PIN FIRING (AL ALLOY)	Part	ASTM-B316	//2017-T4///			1.0000	
9234572	PIN FIRING (AL ALLOY) (ALT)	Part	ASTM-B211	//2024-T4///			1.0000	
8797763	DETONATOR M24 ASSY	Component					1.0000	
	PEP (PRIMER MIX KCLO3 33.4%)	Part			0.8600	GR	1.0000	0.00012300
	K CHLORATE (33.40%)	Compound	MIL-P-150	//A/2//				
	SB SULFIDE (33.30%)	Compound	MIL-A-159	///A,B//				
	PB AZIDE (28.30%)	Compound	MIL-L-3055	/1////				
	CARBORUNDUM (5.00%)	Compound	COMMERCIAL					
	PEP (PB AZIDE)	Part	MIL-L-3055		2.7700	GR	1.0000	0.00039600
	PB AZIDE (100.00%)	Compound	MIL-L-3055					
8797745-10	CUP DETONATOR (AL ALLOY)	Part	QQ-A-561	//1100///	4.6000	GR	1.0000	0.00065700
8795797-1	DISC DETONATOR (AL ALLOY)	Part	QQ-A-561	//1100///	0.3000	GR	1.0000	0.00004300
8797765	WASHER RETAINER (FUZE CLOTH)	Part	JAN-C-367		0.1000	GR	1.0000	0.00001400
8797765	WASHER RETAINER (WOOL FELT) (ALT)	Part	C-F-206	/2//20S//	0.1000	GR	1.0000	
8797766	RETAINER (AL ALLOY)	Part	QQ-A-225/5A		1.3000	GR	1.0000	0.00018600
8797766	RETAINER (AL ALLOY) (ALT)	Part	QQ-A-250/2B		1.3000	GR	1.0000	

USADACS - MIDAS DETAILED STRUCTURE FOR A MUNITION (LESS BULK ITEMS)

Nomenclature: FUZE PD M557
NSN: 1390001875392 DODIC: N335 Reported Weight: 2.1200 LB

DRAWING #	NOMENCLATURE	TYPE	SPECIFICATION	TGCS	-- REPORTED --- WEIGHT	UNIT	FACTOR	FACTORED WEIGHT(LB)
9234457	BODY LOADING ASSY	Component	MIL-F-60349				1.0000	
9234573	SEAL BODY (AL TAPE)	Part	COMMERCIAL				1.0000	
8798222	BODY MPTS	Component					1.0000	
8798223	BODY (STEEL)	Part	ASTM-A108				1.0000	
8798223	BODY (STEEL) (ALT)	Part	MIL-S-13048				1.0000	
8798224	INTERRUPTER (BRS)	Part	ASTM-B16				1.0000	
8798225-1	SPRING TENSION (SPRING STEEL)	Part	ASTM-A228				1.0000	
8798225-1	SPRING TENSION (STEEL) (ALT)	Part	ASTM-A227				1.0000	
8798225-1	SPRING TENSION (STEEL) (ALT)	Part	ASTM-A229				1.0000	
8798226	RETAINER SETTING SLEEVE (BRS)	Part	ASTM-B16				1.0000	
8798227	WASHER SETTING SLEEVE (STEEL)	Part	ASTM-A109				1.0000	
8798228	SETTING SLEEVE ASSY	Component					1.0000	
8798229	SLEEVE SETTING (BRS)	Part	ASTM-B16				1.0000	
8798230	CUP SPRING (BRS)	Part	ASTM-B16				1.0000	
8798231	SPRING INTERRUPTER (SPRING STEEL)	Part	ASTM-A228				1.0000	
8797864-3	DELAY PLUNGER M1 ASSY	Component	MIL-P-20378		1166.4000	GR	1.0000	
8797869	WASHER LOCK CHECK (BRS)	Part	ASTM-B36		30.0000	GR	1.0000	0.00428600
8797870	SUPPORT PLUNGER (STEEL)	Part	ASTM-A108	//1137///	39.0000	GR	1.0000	0.00557200
8797870	SUPPORT PLUNGER (STEEL) (ALT)	Part	QQ-S-633	//1038///	39.0000	GR	1.0000	
8797871	SPRING PLUNGER RESTRAINING (SPRING STEEL)	Part	ASTM-A228		10.1000	GR	1.0000	0.00144300
8797872	PIN GUIDE (BRS)	Part	ASTM-B16		4.0000	GR	1.0000	0.00057100
9204747	PIN GUIDE (STAINLESS STEEL) (ALT)	Part	MIL-P-10971				1.0000	
8797873	FIRING PIN ASSY	Component			245.0000	GR	1.0000	
8797874	HOUSING PLUNGER (STEEL)	Part	ASTM-A569		239.0000	GR	1.0000	0.03414400
8797874	HOUSING PLUNGER (STEEL) (ALT)	Part	ASTM-A109		239.0000	GR	1.0000	
8797875	PIN FIRING (STEEL)	Part	ASTM-A108	//1177///	6.0000	GR	1.0000	0.00085700
8797875	PIN FIRING (STEEL WIRE) (ALT)	Part	QQ-W-461	//1035///	6.0000	GR	1.0000	
8797876	PLUNGER BODY ASSY	Component			799.8000	GR	1.0000	
8797877	BODY PLUNGER (BRS)	Part	ASTM-B16		741.4000	GR	1.0000	0.10591600
8797878	LOCK CENT PLUNGER PIN (STEEL)	Part	ASTM-A109		6.0000	GR	1.0000	0.00085700
8797878	LOCK CENT PLUNGER PIN (STEEL) (ALT)	Part	ASTM-A569		6.0000	GR	1.0000	
8797878	LOCK CENT PLUNGER PIN (STEEL) (ALT)	Part	ASTM-A366		6.0000	GR	1.0000	
8797879	PIN LOCK PIVOT (STEEL)	Part	ASTM-A108	//1018///	5.0000	GR	1.0000	0.00071400
8797879	PIN LOCK PIVOT (STEEL WIRE) (ALT)	Part	QQ-W-461	//1020///	5.0000	GR	1.0000	
8797880	RETAINER SPRING (BRS)	Part	ASTM-B36		8.0000	GR	2.0000	0.00228600
8797881	SPRING CENTRIFUGAL PIN (SPRING STEEL)	Part	ASTM-A228		0.7000	GR	2.0000	0.00020000
8797881	SPRING CENTRIFUGAL PIN (STEEL) (ALT)	Part	ASTM-A227		0.7000	GR	2.0000	
8797881	SPRING CENTRIFUGAL PIN (STAINLESS WIRE) (ALT)	Part	QQ-W-423	/302////	0.7000	GR	2.0000	
8797882	PIN CENTRIFUGAL PLUNGER (STEEL)	Part	ASTM-A108	//1137///	15.0000	GR	2.0000	0.00428600
8844434-2	DELAY ELEMENT M2 ASSY	Component	MIL-D-46486				1.0000	
8844432	HOLDER PRIMER (BRS)	Part	ASTM-B16				1.0000	
8840607	PRIMER PERC M54 ASSY	Component	MIL-P-13392				1.0000	
	PEP (PRIMER MIX #70)	Part		///1//	0.1700	GR	1.0000	0.00002400
	PB THIOCYANATE (25.00%)	Compound	MIL-L-65					
	K CHLORATE (53.00%)	Compound	MIL-P-150	//A/1//				
	SB SULFIDE (17.00%)	Compound	MIL-A-159	///1//				
	TNT (5.00%)	Compound	MIL-T-248	/1 OR 2////				
8840604	CUP (GILDING METAL)	Part	JAN-G-383				1.0000	
8840606	DISC (PAPER FOILING)	Part	JAN-P-224	/1////			1.0000	
8840605	ANVIL (BRS)	Part	QQ-B-626				1.0000	
8840605	ANVIL (BRS) (ALT)	Part	QQ-B-613				1.0000	
8840605	ANVIL (BRS WIRE) (ALT)	Part	QQ-W-321	//COMP 7///			1.0000	
8844433	DELAY HOLDER ASSY	Component					1.0000	

USADACS - MIDAS DETAILED STRUCTURE FOR A MUNITION (LESS BULK ITEMS)

Nomenclature: FUZE PD M557
NSN: 1390001875392 DODIC: N335 Reported Weight: 2.1200 LB

DRAWING #	NOMENCLATURE	TYPE	SPECIFICATION	TGCS	-- REPORTED --- WEIGHT	UNIT	FACTOR	FACTORED WEIGHT(LB)
	PEP (BLACK PWDR CL 1*1)	Part	MIL-P-223	///1//	0.3200	GR	1.0000	0.00004600
	K NITRATE (74.00%)	Compound	MIL-P-156	///1//				
	S (10.40%)	Compound	MIL-S-14929					
	CHARCOAL (15.60%)	Compound	JAN-C-178	///1//				
8844431	HOLDER DELAY (BRS)	Part	ASTM-B16				1.0000	
8840608	RELAY M7 ASSY	Component	MIL-R-46453				1.0000	
8844437	WASHER RELAY (AL ALLOY)	Part	QQ-A-561				1.0000	
8840625-3	CUP FLAT BOTTOM RELAY (AL ALLOY)	Part	ASTM-B209	//1100///			1.0000	
	PEP (PB AZIDE)	Part	MIL-L-3055	/1////	1.4300	GR	1.0000	0.00020400
	PB AZIDE (100.00%)	Compound	MIL-L-3055	/1////				
	PEP (PB AZIDE) (ALT)	Part	MIL-L-14758		1.4300	GR	1.0000	
	PB AZIDE (100.00%)	Compound	MIL-L-14758					
	PEP (PB AZIDE) (ALT)	Part	MIL-L-46225		1.4300	GR	1.0000	
	PB AZIDE (100.00%)	Compound	MIL-L-46225					
								0.21498000

USADACS - MIDAS DETAILED STRUCTURE FOR A MUNITION (LESS BULK ITEMS)

06/10/97

Nomenclature: FUZE PROX M532

NSN: 1390007649124 DODIC: N402 Reported Weight: 1.2800 LB

DRAWING #	NOMENCLATURE	TYPE	SPECIFICATION	TGCS	-- REPORTED --- WEIGHT	UNIT	FACTOR	FACTORED WEIGHT(LB)
10976900	FUZE PROX M532	Munition	MIL-F-60482		1.2800	LB	1.0000	
10976900	FUZE M532 PROX MORTAR	Component	MIL-F-60482		1.2800	LB	1.0000	
7542809	WASHER SPRING (STEEL)	Part	QQ-S-777	/1050////	1.8040	GM	1.0000	0.00397800
10982600	POWER SUPPLY	Component			129.0000	GM	1.0000	
7542654	BATTING (FIBERGLASS)	Part	COMMERCIAL	/PF316////			1.0000	
7542659-1	SPACER INSULATING #7 (ASBESTOS INSULATION)	Part	MIL-I-3053	/4PU/AAAA///			3.0000	
7542660	SPACER INSULATING #9 (ASBESTOS INSULATION)	Part	MIL-I-3053	/4PU/AAAA///			3.0000	
7542662	INSULATOR #2 (INSULATION CLOTH & TAPE)	Part	MIL-I-17205	//S///			1.0000	
7542663	SPACER INSULATING #1 (ASBESTOS INSULATION)	Part	MIL-I-3053	/4PU/AAAA///			9.0000	
7542664	DISC INSULATING #1 (AL FOIL)	Part	MIL-A-148	//1100-0///			6.0000	
7542671	INSULATOR #5 (INSULATION CLOTH & TAPE)	Part	MIL-I-17205	//S///			1.0000	
7542672-1	INSULATOR #4 (INSULATION CLOTH & TAPE)	Part	MIL-I-17205	//S///			1.0000	
7542673	INSULATOR #1 (INSULATION CLOTH & TAPE)	Part	MIL-I-17205	//S///			1.0000	
7542691	SPACER INSULATING #8 (ASBESTOS INSULATION)	Part	MIL-I-3053	/4PU/AAAA///			3.0000	
7542711	TOP COVER & TERMINAL ASSY	Component					1.0000	
7542645	TERMINAL GROUND (STEEL)	Part	ASTM-A108	/**////	0.1038	GM	1.0000	0.00022900
7542645	TERMINAL GROUND (STEEL) (ALT)	Part	ASTM-A510	/**////	0.1038	GM	1.0000	
7542646	TERMINAL SEAL (GLASS #A95 2081)	Part	COMMERCIAL				3.0000	
7542712	TOP COVER & PIN ASSY	Component					1.0000	
7542644	COVER TOP (STEEL)	Part	ASTM-A109		31.9400	GM	1.0000	0.07042800
7542644	COVER TOP (STEEL) (ALT)	Part	ASTM-A569		31.9400	GM	1.0000	
7542644	COVER TOP (STEEL) (ALT)	Part	ASTM-A366		31.9400	GM	1.0000	
7542643	PIN LOCATING (STEEL)	Part	ASTM-A108	/**////	0.2968	GM	2.0000	0.00130800
7542643	PIN LOCATING (STEEL) (ALT)	Part	ASTM-A510	/**////	0.2968	GM	2.0000	
11001695	COVER BOTTOM & GLASS SEAL TERMINAL ASSY	Component					1.0000	
7542650	COVER BOTTOM (STEEL)	Part	ASTM-A109		9.8210	GM	1.0000	0.02165500
7542650	COVER BOTTOM (STEEL) (ALT)	Part	ASTM-A569		9.8210	GM	1.0000	
7542650	COVER BOTTOM (STEEL) (ALT)	Part	ASTM-A366		9.8210	GM	1.0000	
7542693	GLASS SEAL TERMINAL ASSY	Component					1.0000	
7542647	GLASS SEAL (GLASS)	Part	COMMERCIAL				1.0000	
7542641-22	WIRE TINNED (CU WIRE)	Part	ASTM-B3				1.0000	
7542640-246	SLEEVING (BLUE) (INSULATION)	Part	MIL-I-3190	///HAI//			1.0000	
10981996	A & B SECTION ASSY	Component					1.0000	
10981983	STRIP INSULATING #1 (YARN CLOTH)	Part	MIL-Y-1140	/ECD-B////			1.0000	
10965796	STRIP INSULATOR HEAT (ASBESTOS INSULATION)	Part	COMMERCIAL	/3000////			1.0000	
7542719	A SECTION ASSY	Component					1.0000	
7542640-204	SLEEVING (YLW) (INSULATION)	Part	MIL-I-3190	///HAI//			1.0000	
7542640-200	SLEEVING (BLACK) (INSULATION)	Part	MIL-I-3190	///HAI//			1.0000	
7542641-20	WIRE TINNED (CU WIRE)	Part	ASTM-B3				2.0000	
7542648	LAYER IMPREGNATED (TAPE TEXTILE GLASS)	Part	MIL-C-20079	/2//1//			1.0000	
7542652	CONNECTOR TERMINAL (CU ALLOY)	Part	ASTM-B152				1.0000	
7542652	CONNECTOR TERMINAL (CU ALLOY) (ALT)	Part	ASTM-B172				1.0000	
7542656	STRIP INNER (NI)	Part	ASTM-B162		3.2150	GM	1.0000	0.00708900
7542674	STRIP IMPREGNATED (TAPE TEXTILE GLASS)	Part	MIL-C-20079	/2//1//			1.0000	
7542679	STRIP (MG)	Part	ASTM-B92	//9980A///			1.0000	
7542681	STRIP OUTER (NI)	Part	ASTM-B162		3.0760	GM	1.0000	0.00678300
7542719(ALT)	A SECTION ASSY (ALT)	Component					1.0000	
7542640-204	SLEEVING (YLW) (INSULATION)	Part	MIL-I-3190	///HAI//			1.0000	
7542640-200	SLEEVING (BLACK) (INSULATION)	Part	MIL-I-3190	///HAI//			1.0000	
7542641-20	WIRE TINNED (CU WIRE)	Part	ASTM-B3				2.0000	
7542648	LAYER IMPREGNATED (TAPE TEXTILE GLASS)	Part	MIL-C-20079	/2//1//			1.0000	
7542652	CONNECTOR TERMINAL (CU ALLOY)	Part	ASTM-B152				1.0000	

USADACS - MIDAS DETAILED STRUCTURE FOR A MUNITION (LESS BULK ITEMS)

Nomenclature: FUZE PROX M532
NSN: 1390007649124 DODIC: N402 Reported Weight: 1.2800 LB

DRAWING #	NOMENCLATURE	TYPE	SPECIFICATION	TGCS	-- REPORTED --- WEIGHT	UNIT	FACTOR	FACTORED WEIGHT(LB)
7542652	CONNECTOR TERMINAL (CU ALLOY) (ALT)	Part	ASTM-B172				1.0000	
7542656	STRIP INNER (NI)	Part	ASTM-B162		3.2150	GM	1.0000	
7542674	STRIP IMPREGNATED (TAPE TEXTILE GLASS)	Part	MIL-C-20079	/2//1//			1.0000	
7542679	STRIP (MG)	Part	ASTM-B92	//9980A///			1.0000	
7542681	STRIP OUTER (NI)	Part	ASTM-B162		3.0760	GM	1.0000	
11003096	STAPLE (BRS)	Part	QQ-B-613				1.0000	
10981995	B SECTION ASSY	Component					1.0000	
7542640-160	SLEEVING (BLACK) (INSULATION)	Part	MIL-I-3190	///HAI//			1.0000	
7542640-200	SLEEVING (BLACK) (INSULATION)	Part	MIL-I-3190	///HAI//			1.0000	
7542651	ROD (STEEL)	Part	ASTM-A108	/**////			6.0000	
7542651	ROD (STEEL) (ALT)	Part	ASTM-A510	/**////			6.0000	
7542666	DISC BOTTOM (CERAMIC)	Part	MIL-I-10	//**/L//			1.0000	
7542667	INSULATOR #3 (INSULATION CLOTH & TAPE)	Part	MIL-I-17205	//S///			1.0000	
7542668	SPACER INSULATING #4 (ASBESTOS QUINORGO)	Part	COMMERCIAL	/3000////			2.0000	
7542668	SPACER INSULATING #4 (ASBESTOS QUINORGO) (ALT)	Part	COMMERCIAL	/1100////			2.0000	
7542669	SPACER INSULATING #6 (ASBESTOS QUINORGO)	Part	COMMERCIAL	/1100////			3.0000	
7542669	SPACER INSULATING #6 (ASBESTOS QUINORGO) (ALT)	Part	COMMERCIAL	/3000////			3.0000	
7542670	SPACER INSULATING #5 (ASBESTOS QUINORGO)	Part	COMMERCIAL	/3000////			1.0000	
7542670	SPACER INSULATING #5 (ASBESTOS QUINORGO) (ALT)	Part	COMMERCIAL	/1100////			1.0000	
7542713	BLOCK HEAT POWDER (POWDER HEAT)	Part	10985777				2.0000	
10982040	IGN ASSY	Component					1.0000	
7542696	PLUNGER (STAINLESS STEEL)	Part	QQ-S-763	/A//6//			1.0000	
7542696	PLUNGER (STAINLESS STEEL) (ALT)	Part	QQ-S-763	/A//7//			1.0000	
7542698	PLATE END (BRS)	Part	QQ-B-613				1.0000	
7542702	TUBE IGN (BRS TUBING)	Part	WW-T-791				1.0000	
7542710	SPRING STRIKER (SPRING STEEL)	Part	ASTM-A228		0.2716	GM	1.0000	0.00059900
10981972	SPRING SETBACK (SPRING STEEL)	Part	ASTM-A228		0.0552	GM	1.0000	0.00012200
MS134352	BALL BEARING (STAINLESS STEEL)	Part	FED-STD-66	//48///			2.0000	
7542703	STRIKER ASSY	Component					1.0000	
	IGN PWDR (IGN PWDR)	Part	7542699		0.0634	GR	1.0000	0.00000900
	PHOSPHORUS (51.00%)	Compound	MIL-P-670					
	BUTYRATE DOPE (32.00%)	Compound						
	SILICONE DIOXIDE (9.00%)	Compound						
	BUTYRATE THINNER (8.00%)	Compound						
7542705	STRIKER BODY ASSY	Component					1.0000	
7542697	PIN STRIKER (AL ALLOY)	Part	ASTM-B211	//2017///			1.0000	
7542694	BODY STRIKER (BRS)	Part	ASTM-B16				1.0000	
7542701	PRIMER ASSY	Component					1.0000	
7542695	HOUSING PRIMER (BRS)	Part	ASTM-B16				1.0000	
	PRIMER PWDR (PRIMER PWDR)	Part	7542700		99.5000	GM	1.0000	0.21939800
	TECHNICAL DEXTRINE (2.00%)	Compound	MIL-D-3994					
	CHARCOAL (11.00%)	Compound	JAN-C-178					
	K CHLORATE (87.00%)	Compound	MIL-P-150	//B///				
10981975	CELL STACK ASSY (WHITE)	Component					3.0000	
10981976-1	INSULATOR CERAMIC (CERAMIC (WHITE))	Part	MIL-I-10	//**/L//			1.0000	
10981978	SPRING (STAINLESS STEEL)	Part	AMS-5673				1.0000	
10981994	WASHER (BRS)	Part	QQ-B-613				1.0000	
10981979	TERMINAL ASSY	Component					1.0000	
7542687	PLATE TERMINAL (INCONEL)	Part	ASTM-B168				1.0000	
7542641-22	WIRE TINNED (CU WIRE)	Part	ASTM-B3				1.0000	
10981981	CELL & WASHER ASSY	Component					15.0000	
10981991	WASHER SPACER (INSULATION CLOTH & TAPE)	Part	MIL-I-17205	//S///			1.0000	
10981982	BUTTON & CUP ASSY	Component					1.0000	

USADACS - MIDAS DETAILED STRUCTURE FOR A MUNITION (LESS BULK ITEMS)

Nomenclature: FUZE PROX M532
NSN: 1390007649124 DODIC: N402 Reported Weight: 1.2800 LB

DRAWING #	NOMENCLATURE	TYPE	SPECIFICATION	TGCS	-- REPORTED --- WEIGHT	UNIT	FACTOR	FACTORED WEIGHT(LB)
7542686	WASHER BUTTON (INSULATION CLOTH & TAPE)	Part	MIL-I-17205	//S///			1.0000	
7542655	BUTTON (MG)	Part	ASTM-B92	//9980A///			1.0000	
11001696	CUP LINER & ELECTROLYTE DISC ASSY	Component					1.0000	
7542665	DISC ELECTROLYTE (ASBESTOS QUINORGO)	Part	COMMERCIAL	/3000////			1.0000	
7542653	CUP ASSY	Component					1.0000	
7542675	LINER CUP (ASBESTOS QUINORGO)	Part	COMMERCIAL	/3000////			1.0000	
7542661	DISC CUP (AG)	Part	MIL-S-13282	//A///	0.6799	GM	1.0000	0.06745500
10981980	TUBE & LINER & TERMINAL ASSY	Component					1.0000	
7542685	CLOSURE STACK BOTTOM (CERAMIC)	Part	MIL-I-10	//**///			1.0000	
7542684	TUBE & LINER ASSY	Component					1.0000	
7542676	LINER (PHLOGOPITE)	Part	COMMERCIAL				1.0000	
7542683	TUBE (BRS TUBING)	Part	WW-T-791	//1///			1.0000	
10981979	TERMINAL ASSY	Component					1.0000	
7542687	PLATE TERMINAL (INCONEL)	Part	ASTM-B168				1.0000	
7542641-22	WIRE TINNED (CU WIRE)	Part	ASTM-B3				1.0000	
10981975(ALT)	CELL STACK ASSY (WHITE) (ALT)	Component					3.0000	
11001320-1	CLOSURE STACK TOP (INSULATING CERAMIC)	Part	MIL-I-10	//**/L//			1.0000	
11001321	TOP TERMINAL ASSY	Component					1.0000	
11001322	SPRING (STAINLESS STEEL)	Part	AMS-5673				1.0000	
7542687	PLATE TERMINAL (INCONEL)	Part	ASTM-B168				1.0000	
10981979	TERMINAL ASSY	Component					1.0000	
7542687	PLATE TERMINAL (INCONEL)	Part	ASTM-B168				1.0000	
7542641-22	WIRE TINNED (CU WIRE)	Part	ASTM-B3				1.0000	
10981980	TUBE & LINER & TERMINAL ASSY	Component					1.0000	
7542685	CLOSURE STACK BOTTOM (CERAMIC)	Part	MIL-I-10	//**///			1.0000	
7542684	TUBE & LINER ASSY	Component					1.0000	
7542676	LINER (PHLOGOPITE)	Part	COMMERCIAL				1.0000	
7542683	TUBE (BRS TUBING)	Part	WW-T-791	//1///			1.0000	
10981979	TERMINAL ASSY	Component					1.0000	
7542687	PLATE TERMINAL (INCONEL)	Part	ASTM-B168				1.0000	
7542641-22	WIRE TINNED (CU WIRE)	Part	ASTM-B3				1.0000	
10981981	CELL & WASHER ASSY	Component					15.0000	
10981991	WASHER SPACER (INSULATION CLOTH & TAPE)	Part	MIL-I-17205	//S///			1.0000	
10981982	BUTTON & CUP ASSY	Component					1.0000	
7542686	WASHER BUTTON (INSULATION CLOTH & TAPE)	Part	MIL-I-17205	//S///			1.0000	
7542655	BUTTON (MG)	Part	ASTM-B92	//9980A///			1.0000	
11001696	CUP LINER & ELECTROLYTE DISC ASSY	Component					1.0000	
7542665	DISC ELECTROLYTE (ASBESTOS QUINORGO)	Part	COMMERCIAL	/3000////			1.0000	
7542653	CUP ASSY	Component					1.0000	
7542675	LINER CUP (ASBESTOS QUINORGO)	Part	COMMERCIAL	/3000////			1.0000	
7542661	DISC CUP (AG)	Part	MIL-S-13282	//A///	0.6799	GM	1.0000	
10981977	CELL STACK ASSY (BLACK)	Component					3.0000	
10981976-2	INSULATOR CERAMIC (CERAMIC (BLACK))	Part	MIL-I-10	//**/L//			1.0000	
10981978	SPRING (STAINLESS STEEL)	Part	AMS-5673				1.0000	
10981994	WASHER (BRS)	Part	QQ-B-613				1.0000	
10981979	TERMINAL ASSY	Component					1.0000	
7542687	PLATE TERMINAL (INCONEL)	Part	ASTM-B168				1.0000	
7542641-22	WIRE TINNED (CU WIRE)	Part	ASTM-B3				1.0000	
10981980	TUBE & LINER & TERMINAL ASSY	Component					1.0000	
7542685	CLOSURE STACK BOTTOM (CERAMIC)	Part	MIL-I-10	//**///			1.0000	
7542684	TUBE & LINER ASSY	Component					1.0000	
7542676	LINER (PHLOGOPITE)	Part	COMMERCIAL				1.0000	
7542683	TUBE (BRS TUBING)	Part	WW-T-791	//1///			1.0000	

USADACS - MIDAS DETAILED STRUCTURE FOR A MUNITION (LESS BULK ITEMS)

Nomenclature: FUZE PROX M532
NSN: 1390007649124 DODIC: N402 Reported Weight: 1.2800 LB

DRAWING #	NOMENCLATURE	TYPE	SPECIFICATION	TGCS	-- REPORTED --- WEIGHT	UNIT	FACTOR	FACTORED WEIGHT(LB)
10981979	TERMINAL ASSY	Component					1.0000	
7542687	PLATE TERMINAL (INCONEL)	Part	ASTM-B168				1.0000	
7542641-22	WIRE TINNED (CU WIRE)	Part	ASTM-B3				1.0000	
10981981	CELL & WASHER ASSY	Component					15.0000	
10981991	WASHER SPACER (INSULATION CLOTH & TAPE)	Part	MIL-I-17205	//S///			1.0000	
10981982	BUTTON & CUP ASSY	Component					1.0000	
7542686	WASHER BUTTON (INSULATION CLOTH & TAPE)	Part	MIL-I-17205	//S///			1.0000	
7542655	BUTTON (MG)	Part	ASTM-B92	//9980A///			1.0000	
11001696	CUP LINER & ELECTROLYTE DISC ASSY	Component					1.0000	
7542665	DISC ELECTROLYTE (ASBESTOS QUINORGO)	Part	COMMERCIAL	/3000////			1.0000	
7542653	CUP ASSY	Component					1.0000	
7542675	LINER CUP (ASBESTOS QUINORGO)	Part	COMMERCIAL	/3000////			1.0000	
7542661	DISC CUP (AG)	Part	MIL-S-13282	//A///	0.6799	GM	1.0000	0.06745500
10981977(ALT)	CELL STACK ASSY (BLACK) (ALT)	Component					3.0000	
11001320-2	CLOSURE STACK TOP (INSULATING CERAMIC)	Part	MIL-I-10	//**/L//			1.0000	
11001321	TOP TERMINAL ASSY	Component					1.0000	
11001322	SPRING (STAINLESS STEEL)	Part	AMS-5673				1.0000	
7542687	PLATE TERMINAL (INCONEL)	Part	ASTM-B168				1.0000	
10981979	TERMINAL ASSY	Component					1.0000	
7542687	PLATE TERMINAL (INCONEL)	Part	ASTM-B168				1.0000	
7542641-22	WIRE TINNED (CU WIRE)	Part	ASTM-B3				1.0000	
10981980	TUBE & LINER & TERMINAL ASSY	Component					1.0000	
7542685	CLOSURE STACK BOTTOM (CERAMIC)	Part	MIL-I-10	//**///			1.0000	
7542684	TUBE & LINER ASSY	Component					1.0000	
7542676	LINER (PHLOGOPITE)	Part	COMMERCIAL				1.0000	
7542683	TUBE (BRS TUBING)	Part	WW-T-791	//1///			1.0000	
10981979	TERMINAL ASSY	Component					1.0000	
7542687	PLATE TERMINAL (INCONEL)	Part	ASTM-B168				1.0000	
7542641-22	WIRE TINNED (CU WIRE)	Part	ASTM-B3				1.0000	
10981981	CELL & WASHER ASSY	Component					15.0000	
10981991	WASHER SPACER (INSULATION CLOTH & TAPE)	Part	MIL-I-17205	//S///			1.0000	
10981982	BUTTON & CUP ASSY	Component					1.0000	
7542686	WASHER BUTTON (INSULATION CLOTH & TAPE)	Part	MIL-I-17205	//S///			1.0000	
7542655	BUTTON (MG)	Part	ASTM-B92	//9980A///			1.0000	
11001696	CUP LINER & ELECTROLYTE DISC ASSY	Component					1.0000	
7542665	DISC ELECTROLYTE (ASBESTOS QUINORGO)	Part	COMMERCIAL	/3000////			1.0000	
7542653	CUP ASSY	Component					1.0000	
7542675	LINER CUP (ASBESTOS QUINORGO)	Part	COMMERCIAL	/3000////			1.0000	
7542661	DISC CUP (AG)	Part	MIL-S-13282	//A///	0.6799	GM	1.0000	
10976191	ELECTRONIC HEAD ASSY	Component					1.0000	
10976127	BODY (AL ALLOY)	Part	ASTM-B211	//7075-T6///	83.9700	GM	1.0000	0.18515400
10976127	BODY (AL ALLOY) (ALT)	Part	ASTM-B221	//7075-T6///	83.9700	GM	1.0000	
10976141	PIN SHEAR (AL ALLOY)	Part	ASTM-B211	//1100-0///			1.0000	
10976143	CONTACT SPRING (CU-BE ALLOY)	Part	ASTM-B194		3.8050	GM	1.0000	0.00839000
10976202	SPACER (RUBBER SILICONE)	Part	AMS-3195				1.0000	
10976886	WASHER (POLYETHYLENE FOAM)	Part	MIL-C-46842				1.0000	
11707521	CAP BODY (STEEL)	Part	ASTM-A109	/**////	1.5460	GM	1.0000	0.00340900
MS21318-9	SCREW DRIVE (STIANLESS STEEL)	Part	FED-STD-66	/U////	0.2216	GM	3.0000	0.00146700
MS9021-032	BODY SEAL (RUBBER)	Part	AMS-7271				1.0000	
MS24628-1	SCREW SELF TAPPING (STEEL)	Part	FF-S-107	/F////			1.0000	
10976796	NOSE CONE ASSY	Component					1.0000	
10976139	PIN RETAINING (STAINLESS STEEL)	Part	ASTM-A493	/302////			3.0000	
10976119	NOSE CONE	Component					1.0000	

USADACS - MIDAS DETAILED STRUCTURE FOR A MUNITION (LESS BULK ITEMS)

Nomenclature: FUZE PROX M532
NSN: 1390007649124 DODIC: N402 Reported Weight: 1.2800 LB

DRAWING #	NOMENCLATURE	TYPE	SPECIFICATION	TGCS	-- REPORTED --- WEIGHT	UNIT	FACTOR	FACTORED WEIGHT(LB)
10976119	NOSE CONE (POLYETHYLENE PLASTIC)	Part	10976138	/2/3/H//			1.0000	
10976121	RING LOCKING (AL ALLOY)	Part	ASTM-B211	//2017-T4///	79.6800	GM	1.0000	0.17569400
MS9021-029	NOSE SEAL (RUBBER O-RING)	Part	AMS-7271				1.0000	
11707505	OSCILLATOR & AMPLIFIER ASSY	Component					1.0000	
10976184	WAX (WAX #E-713)	Part	COMMERCIAL				1.0000	
10976129	ANTENNA ()	Part					1.0000	
10976130	SUPPORT ANTENNA ()	Part					1.0000	
10967517-1	COIL FILAMENT	Component					1.0000	
10976173-4	WIRE TINNED (CU WIRE)	Part	QQ-W-343	/S////			1.0000	
10967517*1	COIL FILAMENT (CU WIRE)	Part	MIL-W-583	/2////			1.0000	
10967517*2	COIL FORM (PLASTIC)	Part					1.0000	
11707512	AMPLIFIER ASSY	Component					1.0000	
10967358	CONTACT SOCKET (CU-BE ALLOY)	Part	ASTM-B194		0.3286	GM	5.0000	0.00362500
10976128	SEAL SOCKET (SILICONE RUBBER)	Part	ZZ-R-765	//40/2//			5.0000	
10976128	SEAL SOCKET (SILICONE RUBBER) (ALT)	Part	ZZ-R-765	//50/2//			5.0000	
11707514	CATACOMB AMPLIFIER (POLYETHYLENE)	Part	10976187	/2/5/H//			1.0000	
11707512*1	RESISTOR FIXED (RESISTOR)	Part	MIL-R-39008/1	////RCR34/			1.0000	
7542817-1	TREMBLER SWITCH ASSY	Component					1.0000	
7542773-2	SUPPORT SPRING (EPOXY #CP3-4287)	Part	COMMERCIAL				1.0000	
7532642	SPRING CONTACT ASSY	Component					1.0000	
7542789	WIRE LEAD (CU WIRE)	Part	QQ-W-343				1.0000	
7542772	SPRING CONTACT (SPRING STEEL)	Part	ASTM-A228		0.0366	GM	1.0000	0.00008100
7542769	CONTACT (BRS)	Part	ASTM-B16		0.1011	GM	1.0000	0.00022300
7542770	HOUSING ASSY	Component					1.0000	
7542771	HOUSING SWITCH (BRS)	Part	ASTM-B36	//1-4///	1.3610	GM	1.0000	0.00300100
7542641-24	WIRE TINNED (CU WIRE)	Part	ASTM-B3				1.0000	
11707513	AMPLIFIER SUB ASSY	Component					1.0000	
11707513*1	RESISTOR FIXED (RESISTOR)	Part	MIL-R-39008/1	////RCR23/			1.0000	
11707513*2	RESISTOR FIXED (RESISTOR)	Part	MIL-R-39008/1	////RCR33/			1.0000	
11707513*3	RESISTOR FIXED (RESISTOR)	Part	MIL-R-39008/1	////RCR31/			1.0000	
11707513*4	RESISTOR FIXED (RESISTOR)	Part	MIL-R-39008/1	////RCR25/			1.0000	
11707513*5	RESISTOR FIXED (RESISTOR)	Part	MIL-R-39008/1	////RCR29/			1.0000	
11707515-1	CAPACITOR FIXED (CERAMIC DIELECTRIC)	Part	MIL-C-11015/9	////C28/			1.0000	
11707513*6	RESISTOR FIXED (RESISTOR)	Part	MIL-R-39008/1	////RCR26/			1.0000	
11707511	PRINTED CIRCUIT BOARD (PLASTIC CU LAMINATE)	Part	MIL-P-13949	/FLGE020C////			1.0000	
11707513*7	CAPACITOR FIXED (CAPACITOR)	Part	MIL-C-55514/1	////C31/			1.0000	
11707513*8	CAPACITOR FIXED (CAPACITOR)	Part	MIL-C-55514/1	////C26/			1.0000	
11707513*9	RESISTOR FIXED (RESISTOR)	Part	MIL-R-39008/2	////RCR24/			1.0000	
11707513*11	CAPACITOR FIXED (CAPACITOR)	Part	MIL-C-55514/1	////C33/			1.0000	
11707513*10	CAPACITOR FIXED (CAPACITOR)	Part	MIL-C-55514/1	////C32/			1.0000	
11707517	CAPACITOR (MODIFIED) (ELECTROLYTIC)	Part	COMMERCIAL	////C27/			1.0000	
11707515-2	CAPACITOR FIXED (CERAMIC DIELECTRIC)	Part	MIL-C-11015/9	////C30/			1.0000	
11008888	INTEGRATED CIRCUIT ASSY	Component	TL-PD-322				1.0000	
10999564	OSCILLATOR & HOUSING ASSY	Component					1.0000	
11707515-3	CAPACITOR FIXED CERAMIC DIELECTRIC (CERAMIC DIELEC	Part	MIL-C-11015/9	////C1/			1.0000	
10976160	DIODE SILICON (SILICON)	Part	COMMERCIAL	/UN1-G////			1.0000	
10976307-1	CAPACITOR FEED THRU (CERAMIC)	Part	COMMERCIAL	/#EF-5///A/			4.0000	
10999568	CATACOMB OSCILLATOR (POLYETHYLENE)	Part	10976187	/2/5/H//			1.0000	
10999555	HOUSING AMPLIFIER (BRS)	Part	ASTM-B36	//260///	26.2200	GM	1.0000	0.05781500
10999555	HOUSING AMPLIFIER (BRS) (ALT)	Part	ASTM-B36	//268///	26.2200	GM	1.0000	
10976159	RING SOLDER (SN-PB SOLDER)	Part	QQ-S-571	/SN62////			4.0000	
10999558	SEAL TUBE (POLYETHYLENE PLASTIC)	Part	10976187	/2/5/H//			1.0000	
10982432	SPACER INSULATING (POLYSTRENE PLASTIC FOAM)	Part	MIL-P-60312	/2//1//			1.0000	

USADACS - MIDAS DETAILED STRUCTURE FOR A MUNITION (LESS BULK ITEMS)

Nomenclature: FUZE PROX M532
NSN: 1390007649124 DODIC: N402 Reported Weight: 1.2800 LB

DRAWING #	NOMENCLATURE	TYPE	SPECIFICATION	TGCS	-- REPORTED --- WEIGHT	UNIT	FACTOR	FACTORED WEIGHT(LB)
10999564*2	RESISTOR FIXED (RESISTOR)	Part	MIL-R-39008/1	////RCR1/			1.0000	
10999564*1	CAPACITOR FIXED (CERAMIC)	Part	MIL-C-11015	////C15/			1.0000	
10976161-9	SLEEVING TEFLON (WHITE) (INSULATION TUBING)	Part	MIL-I-22129				1.0000	
10976193	RIVET (BRS)	Part	ASTM-B134	//2///	0.1286	GM	1.0000	0.00028400
10976177	COIL HIGH FREQUENCY	Component					1.0000	
10976177	COIL HIGH FREQUENCY (CU WIRE)	Part	QQ-W-343	/S////	0.5784	GM	1.0000	0.00127500
10976132	FORM COIL (POLYSTYRENE PLASTIC)	Part	L-P-396	/4//2//			1.0000	
10967517-2	COIL FILAMENT	Component					1.0000	
10976173-1	WIRE TINNED (CU WIRE)	Part	QQ-W-343	/S////			1.0000	
10967517*1	COIL FILAMENT (CU WIRE)	Part	MIL-W-583	/2////			1.0000	
10967517*2	COIL FORM (PLASTIC)	Part					1.0000	
10967512	COIL GRID	Component					1.0000	
10967512*1	WIRE (CU WIRE)	Part	MIL-W-3861	/S////			1.0000	
10967512*2	COIL GRID (CU WIRE)	Part	MIL-W-3861	/2////			1.0000	
2109448	ELECTRON TUBE SN 15518 ASSY	Component					1.0000	
10967792-1	SAFETY & ARMING DEVICE FOR M532 FUZE	Component	MIL-D-60484				1.0000	
10967780	PLATE SUPPORT (STEEL)	Part	ASTM-A109		11.7800	GM	1.0000	0.02597500
10967740-1	HOUSING REAR (STEEL)	Part	QQ-S-637	/1212////	143.8000	GM	1.0000	0.31707900
10967740-1	HOUSING REAR (STEEL) (ALT)	Part	QQ-S-637	/1213////	143.8000	GM	1.0000	
11707516	FINAL HOUSING CLOCK & SETBACK ASSY	Component					1.0000	
10967787	CONTACT ASSY	Component					1.0000	
10976199	EYELET (BRS)	Part	ASTM-B121	//342///			2.0000	
10976199	EYELET (BRS) (ALT)	Part	ASTM-B121	//353///			2.0000	
10976199	EYELET (BRS) (ALT)	Part	ASTM-B36	//260///			2.0000	
10976199	EYELET (BRS) (ALT)	Part	ASTM-B36	//268///			2.0000	
10967759	TERMINAL (CU-BE ALLOY)	Part	ASTM-B194		0.1219	GM	1.0000	0.00026900
10967760	INSULATOR TOP (PLASTIC)	Part	L-P-392	/1//1//			1.0000	
8838107	DETONATOR ELECT M84	Component	MIL-D-45495				1.0000	
8838110	FERRULE (STAINLESS STEEL)	Part	QQ-S-764	/303////			1.0000	
8838115	CUP (STAINLESS STEEL)	Part	QQ-S-766	///305//			1.0000	
	PEP (CHG MIX (PETN 99.5%))	Part	MIL-P-387	///4//	65.0000	MG	1.0000	0.00014300
	PETN (99.50%)	Compound	MIL-P-387	///4//				
	GRAPHITE (0.50%)	Compound	MIL-G-155	//1 OR 2///				
	PEP (PB AZIDE)	Part	MIL-L-3055		65.0000	MG	1.0000	0.00014300
	PB AZIDE (100.00%)	Compound	MIL-L-3055					
	PEP (PB AZIDE) (ALT)	Part	MIL-L-46225		65.0000	MG	1.0000	
	PB AZIDE (100.00%)	Compound	MIL-L-46225					
	PEP (PB AZIDE) (ALT)	Part	MIL-L-14758		65.0000	MG	1.0000	
	PB AZIDE (100.00%)	Compound	MIL-L-14758					
9335755	BRIDGE & PLUG ASSY	Component					1.0000	
9335757	WIRE BRIDGE (PT 70% WIRE)	Part	COMMERCIAL				1.0000	
	SPOT CHG (SPOT CHG)	Part	9311165		5.0000	MG	1.0000	0.00001100
	N-AMYL ALCOHOL (23.02%)	Compound	ASTM-D319					
	PB STYPHNATE (59.92%)	Compound	MIL-L-757					
	TOLUENE (7.30%)	Compound	MIL-T-171	//B///				
	CAMPHOR (0.35%)	Compound	COMMERCIAL					
	NC (0.50%)	Compound	COMMERCIAL					
	BUTYL ACETATE (7.97%)	Compound	TT-B-838					
	NC (0.94%)	Compound	TT-N-350					
9335754	PLUG ASSY	Component					1.0000	
8860882	PIN (NI STEEL ALLOY)	Part	9242487		0.1242	GM	1.0000	0.00027400
8860884	INSULATOR (GLASS)	Part	COMMERCIAL				1.0000	
9335753	PLUG (STEEL)	Part	ASTM-A108	/**////			1.0000	

USADACS - MIDAS DETAILED STRUCTURE FOR A MUNITION (LESS BULK ITEMS)

Nomenclature: FUZE PROX M532
NSN: 1390007649124 DODIC: N402 Reported Weight: 1.2800 LB

DRAWING #	NOMENCLATURE	TYPE	SPECIFICATION	TGCS	-- REPORTED --- WEIGHT	UNIT	FACTOR	FACTORED WEIGHT(LB)
10999546	HOUSING CLOCK & SETBACK SUBASSY	Component					1.0000	
MS35337-77	WASHER (STEEL)	Part	QQ-S-633				4.0000	
MS51957-7	SCREW MACHINE (STAINLESS STEEL)	Part	ASTM-A380				4.0000	
10967773	SPRING ROTOR (STAINLESS STEEL)	Part	ASTM-A313	/**////			1.0000	
10967783	SETBACK MECHANISM ASSY	Component					1.0000	
MS16535-63	RIVET (STAINLESS STEEL)	Part	ASTM-A29				2.0000	
10967765	PLATE LEAF RETAINING (BRS)	Part	ASTM-B36	//260///			1.0000	
10967765	PLATE LEAF RETAINING (BRS) (ALT)	Part	ASTM-B36	//268///			1.0000	
10982053	ANTI-RESET (CU-BE ALLOY)	Part	ASTM-B194				1.0000	
10967781	LEAF & SPRING ASSY	Component					1.0000	
10967772	SPRING LEAF (SPRING STEEL)	Part	ASTM-A228				3.0000	
10967795	LEAF #1 & SHAFT ASSY	Component					1.0000	
10967735-1	LEAF (BRS)	Part	ASTM-B36	//260///			1.0000	
10967755	SHAFT 1ST LEAF (STAINLESS STEEL)	Part	ASTM-A581	/303A////			1.0000	
10967755	SHAFT 1ST LEAF (STAINLESS STEEL) (ALT)	Part	ASTM-A581	/303B////			1.0000	
10976114	LEAF #2 & SHAFT ASSY	Component					1.0000	
10967735-2	LEAF (BRS)	Part	ASTM-B36	//260///			1.0000	
10967796	SHAFT 2ND LEAF (STAINLESS STEEL)	Part	ASTM-A581	/303A////			1.0000	
10967796	SHAFT 2ND LEAF (STAINLESS STEEL) (ALT)	Part	ASTM-A581	/303B////			1.0000	
10967779	LEAF #3 & SHAFT ASSY	Component					1.0000	
10967754	LEAF #3 (BRS)	Part	ASTM-B36	//260///			1.0000	
10967753	SHAFT 3RD LEAF (STAINLESS STEEL)	Part	ASTM-A581	/303A////			1.0000	
10967753	SHAFT 3RD LEAF (STAINLESS STEEL) (ALT)	Part	ASTM-A581	/303B////			1.0000	
10976116	LEAF FRAME & RELEASE LEVER ASSY	Component					1.0000	
10976117	RIVET SHOULDER (STAINLESS STEEL)	Part	ASTM-A581	//303A///			1.0000	
10976117	RIVET SHOULDER (STAINLESS STEEL) (ALT)	Part	ASTM-A581	//303B///			1.0000	
10967764	FRAME LEAF (BRS)	Part	ASTM-B36	//260///			1.0000	
10967764	FRAME LEAF (BRS) (ALT)	Part	ASTM-B36	//268///			1.0000	
10967797	LEVER RELEASE (STAINLESS STEEL)	Part	ASTM-A167	/302////			1.0000	
10967777	FINAL CLOCK ASSY	Component					1.0000	
10976118	RIVET (STAINLESS STEEL)	Part	QQ-S-763	/305////			1.0000	
10967774	SPRING MAIN DRIVE (STAINLESS WIRE)	Part	QQ-W-423	/302B////			1.0000	
10976115	RELEASE DISC & PIN ASSY	Component					1.0000	
10967752	DISC RELEASE (STAINLESS STEEL)	Part	ASTM-A167	/**////			1.0000	
10967752	DISC RELEASE (STAINLESS STEEL) (ALT)	Part	ASTM-A176	/410////			1.0000	
10967775	PIN RELEASE (STAINLESS STEEL)	Part	ASTM-A581	/303A////			1.0000	
10967775	PIN RELEASE (STAINLESS STEEL) (ALT)	Part	ASTM-A581	/303B////			1.0000	
10967776	CLOCK ASSY	Component					1.0000	
10967747	PLATE CLOCK FRONT (BRS)	Part	ASTM-B36	//260///			1.0000	
10967747	PLATE CLOCK FRONT (BRS) (ALT)	Part	ASTM-B36	//268///			1.0000	
10967746	SPACER ALIGNING (AL ALLOY)	Part	ASTM-B211	//2017-T4///			2.0000	
10967766	#1 PINION ASSY	Component					1.0000	
10967731	GEAR (BRS)	Part	ASTM-B36	//268///			1.0000	
10967731	GEAR (BRS) (ALT)	Part	ASTM-B121	//353///			1.0000	
10967731	GEAR (BRS) (ALT)	Part	ASTM-B121	//342///			1.0000	
10967743	PINION #1 (STAINLESS STEEL)	Part	QQ-S-763	///410//			1.0000	
10967743	PINION #1 (STAINLESS STEEL) (ALT)	Part	ASTM-A581	///410A//			1.0000	
10967768	MAIN GEAR & SHAFT ASSY	Component					1.0000	
10967751	GEAR MAIN DRIVE (BRS)	Part	ASTM-B36	//260///			1.0000	
10967751	GEAR MAIN DRIVE (BRS) (ALT)	Part	ASTM-B36	//268///			1.0000	
10967751	GEAR MAIN DRIVE (BRS) (ALT)	Part	ASTM-B121	//**///			1.0000	
10967749	SHAFT MAIN (STAINLESS STEEL)	Part	QQ-S-763	///410//			1.0000	
10967749	SHAFT MAIN (STAINLESS STEEL) (ALT)	Part	ASTM-A581	/416////			1.0000	

USADACS - MIDAS DETAILED STRUCTURE FOR A MUNITION (LESS BULK ITEMS)

Nomenclature: FUZE PROX M532
NSN: 1390007649124 DODIC: N402 Reported Weight: 1.2800 LB

DRAWING #	NOMENCLATURE	TYPE	SPECIFICATION	TGCS	-- REPORTED --- WEIGHT	UNIT	FACTOR	FACTORED WEIGHT(LB)
10967749	SHAFT MAIN (STAINLESS STEEL) (ALT)	Part	ASTM-A581	/416SE////			1.0000	
10967767	#2 PINION ASSY	Component					1.0000	
10967731	GEAR (BRS)	Part	ASTM-B36	//268///			1.0000	
10967731	GEAR (BRS) (ALT)	Part	ASTM-B121	//353///			1.0000	
10967731	GEAR (BRS) (ALT)	Part	ASTM-B121	//342///			1.0000	
10967744	PINION #2 (STAINLESS STEEL)	Part	QQ-S-763	///410//			1.0000	
10967744	PINION #2 (STAINLESS STEEL) (ALT)	Part	ASTM-A581	/416////			1.0000	
10967744	PINION #2 (STAINLESS STEEL) (ALT)	Part	ASTM-A581	/416SE////			1.0000	
10967770	ESCAPEMENT WHEEL & PINION #3 ASSY	Component					1.0000	
10967725	WHEEL ESCAPE (BRS)	Part	ASTM-B36	//260///			1.0000	
10967745	PINION #3 (STAINLESS STEEL)	Part	QQ-S-763	///410//			1.0000	
10967745	PINION #3 (STAINLESS STEEL) (ALT)	Part	ASTM-A581	/416////			1.0000	
10967745	PINION #3 (STAINLESS STEEL) (ALT)	Part	ASTM-A581	/416SE////			1.0000	
10967769	PALLET ASSY	Component					1.0000	
10967750	ARBOR PALLET (STAINLESS STEEL)	Part	ASTM-A581	/416////			1.0000	
10967750	ARBOR PALLET (STAINLESS STEEL) (ALT)	Part	ASTM-A581	/416SE////			1.0000	
10967724	PALLET (BRS)	Part	ASTM-B36	//260///			1.0000	
10967771	REAR CLOCK PLATE ASSY	Component					1.0000	
10967748	PLATE CLOCK REAR (BRS)	Part	ASTM-B36	//260///			1.0000	
10967748	PLATE CLOCK REAR (BRS) (ALT)	Part	ASTM-B36	//268///			1.0000	
10976133	SPACER (AL ALLOY)	Part	ASTM-B211	//2017-T4///	0.2160	GM	2.0000	0.00095200
10967784	ROTOR & PIN ASSY	Component					1.0000	
10967762	ROTOR (AL ALLOY)	Part	ASTM-B211	//2017-T4///	3.4990	GM	1.0000	0.00771500
10976125	INSULATOR ROTOR (LAMINATED THERMOSETTING)	Part	ASTM-D709	/2/LE///			1.0000	
MS171434	PIN SPRING (STAINLESS STEEL)	Part	FED-STD-66	/410////			1.0000	
MS171434	PIN SPRING (STAINLESS STEEL) (ALT)							

USADACS - MIDAS DETAILED STRUCTURE FOR A MUNITION (LESS BULK ITEMS)

06/10/97

Nomenclature: FUZE PROX M732

NSN: 1390010200096 DODIC: N464 Reported Weight: 1.7500 LB

DRAWING #	NOMENCLATURE	TYPE	SPECIFICATION	TGCS	-- REPORTED --- WEIGHT	UNIT	FACTOR	FACTORED WEIGHT(LB)
11716451	FUZE PROX M732	Munition	MIL-F-48706		1.7500	LB	1.0000	
11716451	FUZE PROX M732	Component	MIL-F-48706		1.7500	LB	1.0000	
11716740	BOOSTER CUP ASSY	Component					1.0000	
11716736	CUP BOOSTER (AL ALLOY)	Part	ASTM-B211	//2024-T4///	31.0000	GM	1.0000	0.06835500
11716736	CUP BOOSTER (AL ALLOY) (ALT)	Part	ASTM-B211	//2011-T3///	31.0000	GM	1.0000	
11730230	CUSHION BOOSTER (TAPE PRESS SENSITIVE)	Part	COMMERCIAL				1.0000	
11716731	PELLET BOSSTER (COMP CH6)	Part	MIL-C-21723		5.8500	GM	1.0000	0.01289900
	RDX (97.50%)	Compound	MIL-R-398					
	CA STEARATE (1.50%)	Compound	JAN-C-263					
	GRAPHITE (0.50%)	Compound	MIL-G-155					
	POLYISOBUTYLENE (0.50%)	Compound	MIL-P-13298					
11716452	FUZE PROX M732 (LESS BOOSTER CUP ASSY)	Component	MIL-F-50596				1.0000	
11716725	PIN FIRING (STEEL)	Part	QQ-S-700	//1095///	0.1250	GM	1.0000	0.00027600
11718234	CLIP DETONATOR (CU-BE ALLOY)	Part	ASTM-B194				1.0000	
11722405	ELECT DETONATOR ASSY	Component					1.0000	
11722406	CUP LOADED	Component					1.0000	
11722414	CUP (AL ALLOY)	Part	QQ-A-250	//6061///			1.0000	
	PEP (HMX)	Part	MIL-H-45444	//B/3//	16.0000	MG	1.0000	0.00003500
	HMX (98.00%)	Compound	MIL-H-45444					
	RDX (2.00%)	Compound	MIL-R-398					
	PEP (HMX) (ALT)	Part	MIL-H-45444	//B/1//	16.0000	MG	1.0000	
	HMX (98.00%)	Compound	MIL-H-45444					
	RDX (2.00%)	Compound	MIL-R-398					
	PEP (PB AZIDE)	Part	MIL-L-46225		14.0000	MG	1.0000	0.00003100
	PB AZIDE (100.00%)	Compound	MIL-L-46225					
11722407	BRIDGED PLUG & IGN ASSY	Component					1.0000	
	SPOT CHG (SPOT CHG)	Part	11720508		1.6000	MG	1.0000	0.00000400
	N-AMYL ALCOHOL (32.16%)	Compound	ASTM-D319					
	PB STYPHNATE (53.71%)	Compound	MIL-L-757					
	TOLUENE (6.51%)	Compound	MIL-T-171	//B///				
	CAMPHOR (0.60%)	Compound	COMMERCIAL					
	NC (0.86%)	Compound	COMMERCIAL					
	BUTYL ACETATE (4.55%)	Compound	TT-B-838					
	NC (1.61%)	Compound	TT-N-350					
11722408	BRIDGE ASSY	Component					1.0000	
11720506	BRIDGE WIRE (COMMERCIAL)	Part	COMMERCIAL				1.0000	
11722409	PLUG ASSY	Component					1.0000	
11722412	PIN (WIRE ELECTRODE)	Part	11720507				1.0000	
11722410	HEADER (STEEL)	Part	ASTM-A576	//C1215///			1.0000	
11722411	PELLET (GLASS)	Part	11720512				1.0000	
11718279	BARRIER LEAD CUP ASSY	Component			34.6000	GM	1.0000	
11716735	PLATE BARRIER (STEEL)	Part	ASTM-A331	//4130///	30.0000	GM	1.0000	0.06615000
11716735	PLATE BARRIER (STEEL) (ALT)	Part	MIL-S-18729		30.0000	GM	1.0000	
11716459	CUP LEAD (AL ALLOY)	Part	ASTM-B209	//1100///	1.0000	GM	1.0000	0.00220500
	PEP (PBXN-5)	Part	MIL-E-81111	/1//1,2 OR 3//	110.0000	MG	1.0000	0.00024300
	HMX (95.00%)	Compound	MIL-H-45444					
	BINDER (5.00%)	Compound	COMMERCIAL					
11718428	SEAL CLOSING CUP (TAPE PRESS SENSITIVE)	Part	COMMERCIAL				1.0000	
11716741	S & A MODUALE ASSY	Component			60.0000	GM	1.0000	
11716766	SPRING DETONATOR SLEEVE (STAINLESS STEEL)	Part	ASTM-A313	/302////	1.5690	GR	1.0000	0.00022400
11716766	SPRING DETONATOR SLEEVE (SPRING STEEL) (ALT)	Part	ASTM-A228		1.5690	GR	1.0000	
11718423	DETENT ROTOR (BRS)	Part	ASTM-B121	//**///	400.0000	GR	1.0000	0.05714400

USADACS - MIDAS DETAILED STRUCTURE FOR A MUNITION (LESS BULK ITEMS)

Nomenclature: FUZE PROX M732
NSN: 1390010200096 DODIC: N464 Reported Weight: 1.7500 LB

DRAWING #	NOMENCLATURE	TYPE	SPECIFICATION	TGCS	-- REPORTED --- WEIGHT	UNIT	FACTOR	FACTORED WEIGHT(LB)
11718423	DETENT ROTOR (BRS) (ALT)	Part	ASTM-B36	//**///	400.0000	GR	1.0000	
11716755	SPRING SPINLOCK (STAINLESS STEEL)	Part	ASTM-A313		0.1637	GR	2.0000	0.00004600
11716751	LOCK SPIN (BRS)	Part	ASTM-A36	//**///	10.5900	GR	2.0000	0.00302600
11716751	LOCK SPIN (BRS) (ALT)	Part	ASTM-B121	//**///	10.5900	GR	2.0000	
11716751	LOCK SPIN (BRS) (ALT)	Part	ASTM-B282	///B//	10.5900	GR	2.0000	
11716748	SPACER (ZN ALLOY)	Part	ASTM-B86	//AG40A///	200.0000	GR	1.0000	0.02857200
11716745	PLATE BOTTOM (AL ALLOY)	Part	ASTM-B209	//**///	65.0000	GR	1.0000	0.00928600
11716745	PLATE BOTTOM (BRS) (ALT)	Part	ASTM-B36	//**///	205.6000	GR	1.0000	
11716745	PLATE BOTTOM (BRS) (ALT)	Part	ASTM-B121	//**///	205.6000	GR	1.0000	
11718476	PIN SPRING RETAINING (AL ALLOY)	Part	ASTM-B211	//2011///	2.1650	GR	1.0000	0.00030900
11718477	SPRING SETBACK (SPRING STEEL)	Part	ASTM-A228		0.6197	GR	1.0000	0.00008900
11718477	SPRING SETBACK (STAINLESS STEEL) (ALT)	Part	ASTM-A313		0.6197	GR	1.0000	
11716746	PLATE TOP (AL ALLOY)	Part	ASTM-B209	//**///	60.0000	GR	1.0000	0.00857200
11716746	PLATE TOP (BRS) (ALT)	Part	ASTM-B36	//**///	190.0000	GR	1.0000	
11716746	PLATE TOP (BRS) (ALT)	Part	ASTM-B121	//**///	190.0000	GR	1.0000	
11718475	LOCK SETBACK (STAINLESS STEEL)	Part	ASTM-A582	///416//	10.4500	GR	1.0000	0.00149300
11718475	LOCK SETBACK (STAINLESS STEEL) (ALT)	Part	ASTM-A581	///416//	10.4500	GR	1.0000	
11005146	DETONATOR SLEEVE ASSY	Component			1.3200	GM	1.0000	
11005147	SLEEVE DETONATOR (STAINLESS STEEL)	Part	ASTM-A582		1.1300	GM	1.0000	0.00249200
11005149	DISC RETAINING (AL ALLOY)	Part	ASTM-B209	//1100///	0.0011	GM	1.0000	0.00000200
	PEP (PRIMING MIX)	Part	11005151		25.0000	MG	1.0000	0.00005500
	PB STYPHNATE (40.00%)	Compound	MIL-L-16355					
	TETRACENE (5.00%)	Compound	MIL-T-46938					
	SB SULFIDE (15.00%)	Compound	MIL-A-159	/1//5//				
	PB AZIDE (20.00%)	Compound	MIL-L-3055					
	BA NITRATE (20.00%)	Compound	MIL-B-162	///1//				
	PEP (PB AZIDE)	Part	MIL-L-46225		70.0000	MG	1.0000	0.00015400
	PB AZIDE (100.00%)	Compound	MIL-L-46225					
	PEP (HMX)	Part	MIL-H-45444	//B/**//	110.0000	MG	1.0000	0.00024300
	HMX (MIN) (98.00%)	Compound	MIL-H-45444					
	RDX (2.00%)	Compound	MIL-R-398					
11005148	DISC CLOSING (STAINLESS STEEL)	Part	ASTM-A167		0.0105	GM	1.0000	0.00002300
11716757	LAMINATED ROTOR ASSY	Component			16.4000	GM	1.0000	
11722669	SHUTTER (CU-BE ALLOY)	Part	ASTM-B194				1.0000	
11716764	SHAFT ROTOR (STAINLESS STEEL)	Part	ASTM-A581		1.1190	GM	1.0000	0.00246700
11716765	RIVET ROTOR (BRS)	Part	ASTM-B16		0.4758	GM	1.0000	0.00104900
11716765	RIVET ROTOR (BRS) (ALT)	Part	ASTM-B134		0.4758	GM	1.0000	
11716759	ROTOR LAMINA #1 (BRS)	Part	ASTM-B121	//**///	3.7550	GM	1.0000	0.00828000
11716759	ROTOR LAMINA #1 (BRS) (ALT)	Part	ASTM-B36	//**///	3.7550	GM	1.0000	
11716760	ROTOR LAMINA #2 (BRS)	Part	ASTM-B121	//**///	3.0000	GM	1.0000	0.00661500
11716760	ROTOR LAMINA #2 (BRS) (ALT)	Part	ASTM-B36	//**///	3.0000	GM	1.0000	
11716761	ROTOR LAMINA #3 (BRS)	Part	ASTM-B121	//**///	5.0000	GM	1.0000	0.01102500
11716761	ROTOR LAMINA #3 (BRS) (ALT)	Part	ASTM-B36	//**///	5.0000	GM	1.0000	
11716758	GEAR ROTOR (BRS)	Part	ASTM-B121	//**///	3.1000	GM	1.0000	0.00683600
11716772	#1 GEAR & PINION ASSY	Component					1.0000	
11716773	GEAR #1 (CU-BE ALLOY)	Part	ASTM-B194	//172///	0.3900	GM	1.0000	0.00086000
11716774	PINION #1 (STAINLESS STEEL)	Part	ASTM-A581	/416////	0.5300	GM	1.0000	0.00116900
11716775	ESCAPE WHEEL & PINION ASSY	Component					1.0000	
11716776	WHEEL ESCAPE (CU-BE ALLOY)	Part	ASTM-B194	//172///	0.3027	GM	1.0000	0.00066700
11716777	PINION ESCAPEMENT (STAINLESS STEEL)	Part	ASTM-A581	/416////	0.4255	GM	1.0000	0.00093800
11716778	PALLET ASSY	Component					1.0000	
11716779	PALLET (BRS)	Part	ASTM-B16	//**///	0.9230	GM	1.0000	0.00203500
11716779	PALLET (BRS) (ALT)	Part	ASTM-B36	//**///	0.9230	GM	1.0000	

USADACS - MIDAS DETAILED STRUCTURE FOR A MUNITION (LESS BULK ITEMS)

Nomenclature: FUZE PROX M732
NSN: 1390010200096 DODIC: N464 Reported Weight: 1.7500 LB

DRAWING #	NOMENCLATURE	TYPE	SPECIFICATION	TGCS	-- REPORTED --- WEIGHT	UNIT	FACTOR	FACTORED WEIGHT(LB)
11716779	PALLET (BRS) (ALT)	Part	ASTM-B121	//**///	0.9230	GM	1.0000	
11716780	PIN PALLET (STAINLESS STEEL)	Part	ASTM-A581	/416////	0.0156	GM	2.0000	0.00006800
11716781	SHAFT PALLET (STAINLESS STEEL)	Part	ASTM-A581	/416////	0.3017	GM	1.0000	0.00066500
11716453	ELECTRONIC ASSY	Component					1.0000	
11716470	RING HOLDING (STEEL)	Part	MIL-S-18411	//**///	11.8600	GM	1.0000	0.02615100
11716470	RING HOLDING (STEEL) (ALT)	Part	AISI-C1215		11.8600	GM	1.0000	
11718226	WASHER WATERPROOFING (NEOPRENE)	Part	ASTM-D2000	//BC-615///			1.0000	
11707373	RING SPLIT RETAINING (SPRING STEEL)	Part	ASTM-A228		7.7330	GM	1.0000	0.01705100
11707373	RING SPLIT RETAINING (STAINLESS STEEL) (ALT)	Part	ASTM-A313	/302////			1.0000	
11707373	RING SPLIT RETAINING (STAINLESS WIRE) (ALT)	Part	QQ-W-423	/302////			1.0000	
11718320	SLEEVE (STEEL)	Part	ASTM-A108	//1117///	363.2000	GM	1.0000	0.80085600
11707364	SETSCREW FLUTED SOCKET HEADLESS (STEEL)	Part	ASTM-A331	//4037///			4.0000	
11707364	SETSCREW FLUTED SOCKET HEADLESS (STEEL) (ALT)	Part	ASTM-A108	//1137///			4.0000	
11716454	TURNING CAPSULE ASSY	Component					1.0000	
10976161-11	SLEEVING TEFLON (INSULATION TUBING)	Part	MIL-I-22129				2.0000	
11735413	WASHER STACK (PLASTIC)	Part	L-P-504	/1////			1.0000	
11744726	POWER SUPPLY ASSY	Component					1.0000	
11718310	HOUSING (POLYETHYLENE PLASTIC)	Part	MIL-P-81390	/3////			1.0000	
11718305	RING (POLYETHYLENE PLASTIC)	Part	MIL-P-81390	/3////			1.0000	
11716473	STACK & AMPULE ASSY	Component					1.0000	
11721240	INSULATOR (FISHPAPER)	Part	COMMERCIAL				1.0000	
11718309	PLATE BOTTOM (STEEL)	Part	QQ-S-698	//1008///	2.1250	GM	1.0000	0.00468600
11718309	PLATE BOTTOM (STEEL) (ALT)	Part	QQ-S-698	//1010///	2.1250	GM	1.0000	
11718316	WIRE LEAD (CU ALLOY)	Part	ASTM-B2				2.0000	
11718316	WIRE LEAD (CU ALLOY) (ALT)	Part	ASTM-B3				2.0000	
11007061	SEPARATOR (FISHPAPER)	Part	COMMERCIAL				1.0000	
11007068	PLATE (STEEL)	Part	QQ-S-698	//1008///	0.8097	GM	1.0000	0.00178500
11007068	PLATE (STEEL) (ALT)	Part	QQ-S-698	//1010///	0.8097	GM	1.0000	
11718311	SEQUENCER (BRS)	Part	ASTM-B36		21.8000	GM	1.0000	0.04806900
11718311	SEQUENCER (BRS) (ALT)	Part	ASTM-B19		21.8000	GM	1.0000	
11718311	SEQUENCER (BRS) (ALT)	Part	ASTM-B124		21.8000	GM	1.0000	
11007047	AMPULE ASSY	Component					1.0000	
11718307	DIAPHRAGM (CU ALLOY)	Part	ASTM-B152		0.5421	GM	1.0000	0.00119500
11734588	WELD RING (CU ALLOY)	Part	ASTM-A152	//102///	0.4833	GM	1.0000	0.00106600
11744472	WEIGHT OUTER (CU ALLOY)	Part	ASTM-B133	/A/110///	9.6060	GM	1.0000	0.02118100
11744472	WEIGHT OUTER (CU ALLOY) (ALT)	Part	ASTM-B152	/A/110///	9.6060	GM	1.0000	
11744472	WEIGHT OUTER (CU ALLOY) (ALT)	Part	ASTM-B301	//187///	9.6060	GM	1.0000	
11007055	CAN AMPULE (CU ALLOY)	Part	ASTM-B152	//102///	3.0350	GM	1.0000	0.00669200
11744473	BROMIDE AMPULE ASSY	Component					1.0000	
11744475	DIAPHRAGM BROMIDE (CU ALLOY)	Part	ASTM-B152		0.2972	GM	1.0000	0.00065500
11744476	PLATE BROMIDE (CU ALLOY)	Part	ASTM-B152	//102///	0.9907	GM	1.0000	0.00218400
11744474	CAN BROMIDE (CU ALLOY)	Part	ASTM-B152	//102///	1.7400	GM	1.0000	0.00383700
11007063	FIBER POLYPROPYLENE (HERCULON FIBER)	Part	COMMERCIAL				1.0000	
11744477	BROMIDE CUP WEIGHT ASSY	Component					1.0000	
11744478	CUP BROMIDE (CU ALLOY)	Part	ASTM-B152	//102///	1.3020	GM	1.0000	0.00287100
11744478	CUP BROMIDE (CU ALLOY) (ALT)	Part	ASTM-B152	//110///	1.3020	GM	1.0000	
11744479	WEIGHT INNER (CU ALLOY)	Part	ASTM-B133	/A////	5.6450	GM	1.0000	0.01244700
11744479	WEIGHT INNER (CU ALLOY) (ALT)	Part	ASTM-B152	//110///	5.6450	GM	1.0000	
11744479	WEIGHT INNER (CU ALLOY) (ALT)	Part	ASTM-B301	//187///	5.6450	GM	1.0000	
11007052	CUTTER ASSY	Component					1.0000	
11721238	BLADE CUTTER (CU-BE ALLOY)	Part	ASTM-B194				3.0000	
11721237	PLATE CUTTER (CU ALLOY)	Part	ASTM-B152	//102///			1.0000	
11721237	PLATE CUTTER (CU ALLOY) (ALT)	Part	ASTM-B152	//110///			1.0000	

USADACS - MIDAS DETAILED STRUCTURE FOR A MUNITION (LESS BULK ITEMS)

Nomenclature: FUZE PROX M732
NSN: 1390010200096 DODIC: N464 Reported Weight: 1.7500 LB

DRAWING #	NOMENCLATURE	TYPE	SPECIFICATION	TGCS	-- REPORTED --- WEIGHT	UNIT	FACTOR	FACTORED WEIGHT(LB)
11744471	RIVET (CU ALLOY)	Part	ASTM-B133	/A////			1.0000	
11744471	RIVET (CU ALLOY) (ALT)	Part	ASTM-B187	//110///			1.0000	
11744470	CUTTER BROMIDE (CU-BE ALLOY)	Part	ASTM-B194				1.0000	
11716455	OSCILLATOR AMPLIFIER ASSY	Component					1.0000	
11718414	BODY EXTENSION (STEEL)	Part	QQ-S-637	//1212///	125.7000	GM	1.0000	0.27716900
11718414	BODY EXTENSION (STEEL) (ALT)	Part	QQ-S-637	//1215///	125.7000	GM	1.0000	
11716465	SPACER AMPLIFIER (RESIN POLYSULFONE)	Part	11718927				1.0000	
11718275	POTTED OSCILLATOR ASSY	Component					1.0000	
11716447	CONE NOSE (THERMOPLASTIC RESIN)	Part	11716474				1.0000	
11718271	OSCILLATOR ASSY	Component					1.0000	
11718270	BODY ASSY	Component					1.0000	
11716446	BODY (STEEL)	Part	ASTM-A108	//**///			1.0000	
11718263	STUD DRIVE (STEEL)	Part	ASTM-A108	//**///			3.0000	
11716464	ANTENNA POSITION (THERMOPLASTIC RESIN)	Part	11716474				1.0000	
11718255	PC BOARD OSCILLATOR (PLASTIC/CU LAMINATE)	Part	MIL-P-55617	/TL////			1.0000	
11718268	ANTENNA ASSY	Component					1.0000	
11707249	CHOKE RF (COMMERCIAL)	Part	MIL-C-15303				5.0000	
11718250-14	RESISTOR FIXED (RESISTOR)	Part	MIL-R-39008/1				1.0000	
11707375	DIODE DETECTOR (COMMERCIAL)	Part	COMMERCIAL				1.0000	
11718319	TRANSISTOR NPN (COMMERCIAL)	Part	COMMERCIAL				1.0000	
11718267	ANTENNA FORMED	Component					1.0000	
11716463	ANTENNA (PLASTIC CU LAMINATE)	Part	MIL-P-19161				1.0000	
11716463	ANTENNA (PLASTIC CU LAMINATE) (ALT)	Part	MIL-P-13949				1.0000	
11718321	FASTENER ANTENNA (CU ALLOY)	Part	ASTM-B152				1.0000	
11716460	AMPLIFIER ASSY	Component					1.0000	
11718276	PC BOARD AMPLIFIER (PLASTIC CU LAMINATE)	Part	MIL-P-13949				1.0000	
11707378	WIRE ELECTRICAL (CU WIRE)	Part	QQ-W-343				4.0000	
11730157	RESISTOR (RESISTOR)	Part	MIL-R-83401				1.0000	
11718251-2	CAPACITOR MYLAR (CAPACITOR)	Part	MIL-C-55514				2.0000	
11718516-1	CAPACITOR SOLID TANTALUM (CAPACITOR)	Part	COMMERCIAL				1.0000	
11718251-1	CAPACITOR MYLAR (CAPACITOR)	Part	MIL-C-55514				2.0000	
11718516-5	CAPACITOR SOLID TANTALUM (CAPACITOR)	Part	COMMERCIAL				2.0000	
11718516-2	CAPACITOR SOLID TANTALUM (CAPACITOR)	Part	COMMERCIAL				1.0000	
11718253	CAPACITOR CERAMIC (CERAMIC DIELECTRIC)	Part	MIL-C-39014				1.0000	
11718516-4	CAPACITOR SOLID TANTALUM (CAPACITOR)	Part	COMMERCIAL				1.0000	
11718516-6	CAPACITOR SOLID TANTALUM (CAPACITOR)	Part	COMMERCIAL				1.0000	
11718516-3	CAPACITOR SOLID TANTALUM (CAPACITOR)	Part	COMMERCIAL				1.0000	
11718281	DIODE LIMITER (DIODE)	Part	MIL-S-19500				2.0000	
11715226	INTEGRATED AMPLIFIER TRIGGER CIRCUIT (CIRCUIT	Part	COMMERCIAL				1.0000	
11718280	PROGRAMMABLE UNIJUNCTION (NPNP)	Part	MIL-S-19500				1.0000	
11718250-1	RESISTOR FIXED (RESISTOR)	Part	MIL-R-39008/1				1.0000	
11718250-3	RESISTOR FIXED (RESISTOR)	Part	MIL-R-39008/1				1.0000	
11716959	TIMER HOUSING ASSY	Component					1.0000	
11716917	DETONATOR SOCKET ASSY	Component					1.0000	
11716917*1	BODY (CU ALLOY)	Part	ASTM-B134	//260///			1.0000	
11716917*2	SPRING CONTACT (STAINLESS STEEL)	Part	ASTM-A313	//302///			1.0000	
11716952	CONTACT ASSY	Component					1.0000	
11713812	CONTACT SPRING (CU-BE ALLOY)	Part	ASTM-B194	//172///			3.0000	
11716957	EYELET CONTACT (BRS)	Part	ASTM-B135	//260///			3.0000	
11716940	TIMER HOUSING (AL ALLOY)	Part	ASTM-B85		9.9940	GM	1.0000	0.02203700
11716935	DISC INSULATOR (RESIN THERMOSETTING)	Part	11718934				1.0000	
11716953	PLATE ASSY	Component					1.0000	
11716941	PLATE TOP TIMER (AL ALLOY)	Part	ASTM-B209	//**///	5.0000	GM	1.0000	0.01102500

USADACS - MIDAS DETAILED STRUCTURE FOR A MUNITION (LESS BULK ITEMS)

06/10/97

Nomenclature: FUZE PROX M732

NSN: 1390010200096 DODIC: N464 Reported Weight: 1.7500 LB

DRAWING #	NOMENCLATURE	TYPE	SPECIFICATION	TGCS	-- REPORTED --- WEIGHT	UNIT	FACTOR	FACTORED WEIGHT(LB)
11718932	GROOVE PIN (STAINLESS STEEL)	Part	ASTM-A581	//303///	0.0764	GM	2.0000	0.00033600
11716916	INSULATOR BUSHING (POLYTRIFLOUR)	Part	11716950				5.0000	
11718930	TEST CUP ASSY	Component					1.0000	
11718926	TEST CUP TIMER (RESIN POLYSULFONE)	Part	11718927				1.0000	
11718935	TERMINAL SLOTTED (CU ALLOY)	Part	ASTM-B134	//260///			1.0000	
11718949	TIMER BOARD ASSY	Component					1.0000	
11720573	BOARD TIMER (PLASTIC CU LAMINATE)	Part	MIL-P-13949				1.0000	
11716955	WIRE STANDOFF (CU ALLOY)	Part	ASTM-B134	//260///			3.0000	
11716915	EYELET (BRS)	Part	ASTM-B135	//260///			5.0000	
11718949*1	WIRE (CU WIRE)	Part	QQ-W-343	/AWG24////			1.0000	
11714429	CAPACITOR POLYCARBONATE (CAPACITOR)	Part	MIL-C-55514				1.0000	
11716951	DIODE SILICON (DIODE)	Part	MIL-S-19500				1.0000	
11718942-2	RESISTOR FIXED COMPOSITION (RCR07G2R7KS)	Part	COMMERCIAL				1.0000	
11718945	CAPACITOR FIXED CERAMIC (CAPACITOR)	Part	COMMERCIAL				1.0000	
11714427	RESISTOR FIXED FILM (RESISTOR)	Part	MIL-R-10509				1.0000	
11714425	RESISTOR METAL FILM (RESISTOR)	Part	MIL-R-10509				1.0000	
11718516-7	CAPACITOR SOLID TANTALUM (CAPACITOR)	Part	COMMERCIAL				1.0000	
11720574	INTEGRATED CIRCUIT (CIRCUIT)	Part	COMMERCIAL				1.0000	
11714430	CAPACITOR MYLAR (CAPACITOR)	Part	MIL-C-55514				1.0000	
11716936	DETONATOR BLOCK ASSY	Component					1.0000	
11716926	BLOCK DETONATOR (STEEL)	Part	ASTM-A108	//12L14///			1.0000	
11716928	RATIOMETER (METER)	Part	COMMERCIAL				1.0000	
								1.56589500

USADACS - MIDAS DETAILED STRUCT FOR A MUNITION (LESS BULK ITEMS)

06/10/97

Nomenclature: PRIMER PERC M82

NSN: 1390008924202 DODIC: N523 Reported Weight: Not reported

DRAWING #	NOMENCLATURE	TYPE	SPECIFICATION	TGCS	-- REPORTED --- WEIGHT	UNIT	FACTOR	FACTORED WEIGHT(LB)
8861197	PRIMER PERC M82	Munition	MIL-P-46297				1.0000	
8861197	PRIMER PERC M82 ASSY	Component	MIL-P-46297				1.0000	
8861198	BODY (BRS)	Part	ASTM-B16				1.0000	
8861211	PLUNGER (BRS)	Part	ASTM-B16				1.0000	
8861199	IGN ELEMENT ASSY	Component					1.0000	
8861200	IGN CUP (BRS)	Part	ASTM-B16				1.0000	
12937961	DISC (CELLULOSE STRIP)	Part	JAN-C-677				1.0000	
12937961	DISC (PAPER SEALING) (ALT)	Part	MIL-P-60169	/1////			1.0000	
12937961	DISC (PAPER SEALING) (ALT)	Part	MIL-P-60169	/2////			1.0000	
10522621	PRIMER PERC #34	Component			5.4300	GR	1.0000	
8594095	CUP PRIMER (CU ALLOY)	Part	MIL-C-50	//260///	3.5000	GR	1.0000	0.00050000
10522622	PELLET BOOSTER (PRIMER COMP FA-956)	Part	10522388		0.6000	GR	1.0000	0.00008600
	SB SULFIDE (15.00%)	Compound	MIL-A-159	///1,2 OR 3//				
	BA NITRATE (32.00%)	Compound	MIL-B-162	///1//				
	PB STYPHNATE (37.00%)	Compound	MIL-L-757					
	TETRACENE (4.00%)	Compound	MIL-T-46938					
	PETN (5.00%)	Compound	MIL-P-387	///2//				
	AL PWDR (7.00%)	Compound	MIL-A-512	/3/F/6//				
8594098	DISC (PAPER SEALING)	Part	MIL-P-60169				1.0000	
8594096	ANVIL (CU ALLOY)	Part	MIL-C-50	//260///	1.0700	GR	1.0000	0.00015300
12961137	PRIMER PERC #210 (ALT)	Component	COMMERCIAL		5.5000	GR	1.0000	
12961137*1	CUP PRIMER (CU ALLOY)	Part	MIL-C-50	//260///	3.5000	GR	1.0000	
	PEP (PRIMER MIX K-75)	Part	COMMERCIAL		0.5570	GR	1.0000	
	PB STYPHNATE (39.00%)	Compound	MIL-L-16355					
	TETRACENE (3.00%)	Compound	MIL-T-46938					
	BA NITRATE (41.00%)	Compound	MIL-B-162					
	SB SULFIDE (19.00%)	Compound	MIL-A-159					
	NC (6.00%)	Compound	MIL-N-244					
12961137*2	DISC (PAPER SEALING)	Part	MIL-P-60169				1.0000	
12961137*3	ANVIL (CU ALLOY)	Part	MIL-C-50	//260///	1.0700	GR	1.0000	
8861201	CNTR CHG ASSY	Component	MIL-P-46296				1.0000	
	PEP (BLACK PWDR CL 3)	Part	MIL-P-223	///3//	1.3600	GM	1.0000	0.00299900
	K NITRATE (74.00%)	Compound	MIL-P-156	///1//				
	S (10.40%)	Compound	MIL-S-14929					
	CHARCOAL (15.60%)	Compound	JAN-C-178	///1//				
8861204	CNTR ASSY	Component					1.0000	
8861203	TUBE CNTR (BRS)	Part	ASTM-B135				1.0000	
8861205	CUP CNTR (CU ALLOY)	Part	ASTM-B152				1.0000	
8861206	CLOSURE	Component					1.0000	
8861207	WASHER (CHIPBOARD)	Part	UU-C-282	///2//			1.0000	
8861202	DISC (PAPER ONIONSKIN)	Part	JAN-P-157				1.0000	
								0.00373800

06/10/97 Nomenclature: PRIMER PERC MK2A4

NSN: 1390000095571 DODIC: N525 Reported Weight: 0.0600 LB

DRAWING #	NOMENCLATURE	TYPE	SPECIFICATION	TGCS	-- REPORTED --- WEIGHT	UNIT	FACTOR	FACTORED WEIGHT(LB)
8840362	PRIMER PERC MK2A4	Munition	MIL-P-20338		0.0600	LB	1.0000	
8840362	PRIMER PERC MK2A4 ASSY	Component	MIL-P-20338		0.0600	LB	1.0000	
8840356	DISC CLOSING PLUG (PAPER ONIONSKIN)	Part	MIL-P-157				1.0000	
	PEP (BLACK PWDR CL 5)	Part	MIL-P-223	///5//	19.0000	GR	1.0000	0.00271400
	K NITRATE (74.00%)	Compound	MIL-P-156	///1//				
	S (10.40%)	Compound	MIL-S-14929					
	CHARCOAL (15.60%)	Compound	JAN-C-178	///1//				
8840357	DISC CLOSING PRIMER (CORK)	Part	HH-C-576	/2A//2//			1.0000	
8840358	PRIMER PERC MK2A4 MPTS	Component	MIL-P-60454				1.0000	
8840359	BODY (BRS)	Part	QQ-B-626	//22///	148.0000	GR	1.0000	0.02114300
8840359	BODY (BRS) (ALT)	Part	ASTM-B19	//70/30///	148.0000	GR	1.0000	
8840360	CONE (CU ALLOY)	Part	QQ-C-502				1.0000	
8840361	PLUG (BRS)	Part	QQ-B-626	//2///			1.0000	
8840361	PLUG (BRS) (ALT)	Part	QQ-B-626	//22///			1.0000	
7645332	PRIMER PERC	Component			5.3000	GR	1.0000	
10522621	PRIMER PERC #34	Component			5.4300	GR	1.0000	
8594095	CUP PRIMER (CU ALLOY)	Part	MIL-C-50	//260///	3.5000	GR	1.0000	0.00050000
10522622	PELLET BOOSTER (PRIMER COMP FA-956)	Part	10522388		0.6000	GR	1.0000	0.00008600
	SB SULFIDE (15.00%)	Compound	MIL-A-159	///1,2 OR 3//				
	BA NITRATE (32.00%)	Compound	MIL-B-162	///1//				
	PB STYPHNATE (37.00%)	Compound	MIL-L-757					
	TETRACENE (4.00%)	Compound	MIL-T-46938					
	PETN (5.00%)	Compound	MIL-P-387	///2//				
	AL PWDR (7.00%)	Compound	MIL-A-512	/3/F/6//				
8594098	DISC (PAPER SEALING)	Part	MIL-P-60169				1.0000	
8594096	ANVIL (CU ALLOY)	Part	MIL-C-50	//260///	1.0700	GR	1.0000	0.00015300
8594094	PRIMER PERC #36 (ALT)	Component			5.3000	GR	1.0000	
8594095	CUP PRIMER (CU ALLOY)	Part	MIL-C-50	//260///	3.5000	GR	1.0000	
8594098	DISC (PAPER SEALING)	Part	MIL-P-60169	/1////			1.0000	
8594099	PELLET (PRIMER COMP FA-961)	Part	10521244		0.6000	GR	1.0000	
	PB STYPHNATE (36.00%)	Compound	MIL-L-757					
	TETRACENE (3.00%)	Compound	MIL-T-46938					
	BA NITRATE (29.00%)	Compound	MIL-B-162	///1//				
	PB DIOXIDE (9.00%)	Compound	MIL-L-376	//A///				
	SB SULFIDE (9.00%)	Compound	MIL-A-159	//1,2 OR 3///				
	ZR (9.00%)	Compound	MIL-Z-399	/1//3//				
	PETN (5.00%)	Compound	MIL-P-00387	///2//				
8594096	ANVIL (CU ALLOY)	Part	MIL-C-50	//260///	1.0700	GR	1.0000	
8596120	ANVIL (CU ALLOY) (ALT)	Part	MIL-C-50	//260///	1.6800	GR	1.0000	
7645332-1	PRIMER PERC #205 (ALT)	Component			5.5000	GR	1.0000	
7645332*1	CUP PRIMER (CU ALLOY)	Part	MIL-C-50	//260///	3.5000	GR	1.0000	
	PEP (PRIMER MIX K-75)	Part	COMMERCIAL		0.4400	GR	1.0000	
	PB STYPHNATE (39.00%)	Compound	MIL-L-16355					
	TETRACENE (3.00%)	Compound	MIL-T-46938					
	BA NITRATE (41.00%)	Compound	MIL-B-162					
	SB SULFIDE (19.00%)	Compound	MIL-A-159					
	NC (6.00%)	Compound	MIL-N-244					
7645332*2	DISC (PAPER SEALING)	Part	MIL-P-60169				1.0000	
7645332*3	ANVIL (CU ALLOY)	Part	MIL-C-50	//260///	1.0700	GR	1.0000	
12961137	PRIMER PERC #210 (ALT)	Component	COMMERCIAL		5.5000	GR	1.0000	
12961137*1	CUP PRIMER (CU ALLOY)	Part	MIL-C-50	//260///	3.5000	GR	1.0000	
	PEP (PRIMER MIX K-75)	Part	COMMERCIAL		0.5570	GR	1.0000	

USADACS - MIDAS DETAILED STRUCTURE FOR A MUNITION (LESS BULK ITEMS)

Nomenclature: PRIMER PERC MK2A4
NSN: 1390000095571 DODIC: N525 Reported Weight: 0.0600 LB

DRAWING #	NOMENCLATURE	TYPE	SPECIFICATION	TGCS	-- REPORTED --- WEIGHT	UNIT	FACTOR	FACTORED WEIGHT(LB)
	PB STYPHNATE (39.00%)	Compound	MIL-L-16355					
	TETRACENE (3.00%)	Compound	MIL-T-46938					
	BA NITRATE (41.00%)	Compound	MIL-B-162					
	SB SULFIDE (19.00%)	Compound	MIL-A-159					
	NC (6.00%)	Compound	MIL-N-244					
12961137*2	DISC (PAPER SEALING)	Part	MIL-P-60169				1.0000	
12961137*3	ANVIL (CU ALLOY)	Part	MIL-C-50	//260///	1.0700	GR	1.0000	
7645332-5	PRIMER PERC #80 (ALT)	Component	COMMERCIAL		5.5000	GR	1.0000	
	PEP (PRIMER MIX #5061W)	Part	7259096		0.5600	GR	1.0000	
	BA NITRATE (43.00%)	Compound	MIL-B-162	///1//				
	SB SULFIDE (9.00%)	Compound	MIL-A-159	///1,2 OR 3//				
	PB STYPHNATE (38.00%)	Compound	MIL-L-757					
	TETRACENE (2.00%)	Compound	MIL-T-46938					
	CA SILICIDE (8.00%)	Compound	MIL-C-324	///2//				
7645332*1	CUP PRIMER (CU ALLOY)	Part	MIL-C-50	//260///	3.5000	GR	1.0000	
7645332*2	DISC (PAPER SEALING)	Part	MIL-P-60169				1.0000	
7645332*3	ANVIL (CU ALLOY)	Part	MIL-C-50	//260///	1.0700	GR	1.0000	
7645332-6	PRIMER PERC 84M (ALT)	Component			5.5000	GR	1.0000	
	PEP (PRIMER MIX #5074)	Part	10535491		0.5600	GR	1.0000	
	SB SULFIDE (12.00%)	Compound	MIL-A-159					
	BA NITRATE (39.00%)	Compound	MIL-B-162					
	PB STYPHNATE (38.00%)	Compound	MIL-L-757					
	TETRACENE (4.00%)	Compound	MIL-T-46938					
	AL PWDR (7.00%)	Compound	MIL-A-512					
7645332*1	CUP PRIMER (CU ALLOY)	Part	MIL-C-50	//260///	3.5000	GR	1.0000	
7645332*2	DISC (PAPER SEALING)	Part	MIL-P-60169				1.0000	
7645332*3	ANVIL (CU ALLOY)	Part	MIL-C-50	//260///	1.0700	GR	1.0000	
7645332-7	PRIMER PERC #120M (ALT)	Component	COMMERCIAL		5.5000	GR	1.0000	
	PEP (PRIMER MIX #257W)	Part			0.6100	GR	1.0000	
	PB STYPHNATE NORMAL (38.00%)	Compound	MIL-L-757					
	TETRACENE (4.00%)	Compound	MIL-T-46938					
	PETN (5.00%)	Compound	MIL-P-387					
	BA NITRATE (33.00%)	Compound	MIL-B-162					
	SB SULFIDE (13.00%)	Compound	MIL-A-159					
	AL PWDR (7.00%)	Compound	MIL-A-512					
7645332*1	CUP PRIMER (CU ALLOY)	Part	MIL-C-50	//260///	3.5000	GR	1.0000	
7645332*2	DISC (PAPER SEALING)	Part	MIL-P-60169				1.0000	
7645332*3	ANVIL (CU ALLOY)	Part	MIL-C-50	//260///	1.0700	GR	1.0000	
7645332-9	PRIMER PERC LARGE RIFLE (ALT)	Component	COMMERCIAL				1.0000	
	PEP (PRIMER MIX #304)	Part	COMMERCIAL		0.5000	GR	1.0000	
	PB STYPHNATE (41.00%)	Compound	MIL-L-757					
	TETRACENE (4.00%)	Compound	MIL-T-46938					
	SB SULFIDE (7.00%)	Compound	MIL-A-159					
	CA SILICIDE (8.00%)	Compound	MIL-C-324					
	AL PWDR (4.00%)	Compound	MIL-A-512					
	BA NITRATE (36.00%)	Compound	MIL-B-162					
7645332*1	CUP PRIMER (CU ALLOY)	Part	MIL-C-50	//260///	3.5000	GR	1.0000	
7645332*2	DISC (PAPER SEALING)	Part	MIL-P-60169				1.0000	
7645332*3	ANVIL (CU ALLOY)	Part	MIL-C-50	//260///	1.0700	GR	1.0000	
10551687	PRIMER PERC 72M (ALT)	Component			5.5000	GR	1.0000	
10551687*1	CUP PRIMER (CU ALLOY)	Part	MIL-C-50	//260///	3.5000	GR	1.0000	
	PEP (PRIMER MIX #5061(DRY))	Part	MIL-P-46610		0.5500	GR	1.0000	
	PB STYPHNATE (38.00%)	Compound	MIL-L-757					

USADACS - MIDAS DETAILED STRUCTURE FOR A MUNITION (LESS BULK ITEMS)

Nomenclature: PRIMER PERC MK2A4
NSN: 1390000095571 DODIC: N525 Reported Weight: 0.0600 LB

DRAWING #	NOMENCLATURE	TYPE	SPECIFICATION	TGCS	-- REPORTED --- WEIGHT	UNIT	FACTOR	FACTORED WEIGHT(LB)
	SB SULFIDE (9.00%)	Compound	MIL-A-159					
	TETRACENE (2.00%)	Compound	MIL-T-46938					
	BA NITRATE (43.00%)	Compound	MIL-B-162					
	CA SILICIDE (8.00%)	Compound	MIL-C-324					
10551687*2	DISC (PAPER SEALING)	Part	MIL-P-60169				1.0000	
10551687*3	ANVIL (CU ALLOY)	Part	MIL-C-50	//260///	1.0700	GR	1.0000	
10551688	PRIMER PERC 72M (ALT)	Component			5.5000	GR	1.0000	
	PEP (PRIMER MIX #5061(DRY))	Part	MIL-P-46610		0.5500	GR	1.0000	
	PB STYPHNATE (38.00%)	Compound	MIL-L-757					
	SB SULFIDE (9.00%)	Compound	MIL-A-159					
	TETRACENE (2.00%)	Compound	MIL-T-46938					
	BA NITRATE (43.00%)	Compound	MIL-B-162					
	CA SILICIDE (8.00%)	Compound	MIL-C-324					
10551688*1	CUP PRIMER (CU ALLOY)	Part	MIL-C-50	//260///	3.5000	GR	1.0000	
10551688*2	DISC (PAPER SEALING)	Part	MIL-P-60169				1.0000	
10551688*3	ANVIL (CU ALLOY)	Part	MIL-C-50	//260///	1.0700	GR	1.0000	
11820864	PRIMER PERC 72M (ALT)	Component			5.5000	GR	1.0000	
	PEP (PRIMER MIX #5061W)	Part	7259096		0.5500	GR	1.0000	
	BA NITRATE (43.00%)	Compound	MIL-B-162	///1//				
	SB SULFIDE (9.00%)	Compound	MIL-A-159	///1,2 OR 3//				
	PB STYPHNATE (38.00%)	Compound	MIL-L-757					
	TETRACENE (2.00%)	Compound	MIL-T-46938					
	CA SILICIDE (8.00%)	Compound	MIL-C-324	///2//				
11820864*1	CUP PRIMER (CU ALLOY)	Part	MIL-C-50	//260///	3.5000	GR	1.0000	
11820864*2	DISC (PAPER SEALING)	Part	MIL-P-60169				1.0000	
11820864*3	ANVIL (CU ALLOY)	Part	MIL-C-50	//260///	1.0700	GR	1.0000	
								0.02459600

APPENDIX D. AMMUNTION DATA SHEETS AND LIFE CYCLE ANALYSIS STUDIES

TM 43-0001-27

TECHNICAL MANUAL

ARMY AMMUNITION DATA SHEETS
SMALL CALIBER AMMUNITION
FSC 1305

This copy is a reprint which includes current pages from Changes 1 through 11

HEADQUARTERS, DEPARTMENT OF THE ARMY

JUNE 1981

CARTRIDGE, .410, SHOTGUN, NO. M35

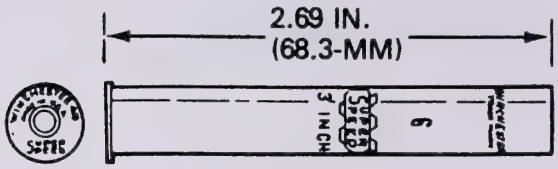

ARD80-0061

Type Classification:

OBS MSR11756003

Use:

Rifle/Shotgun, Caliber .22/.410 Bore, Survival, M6.

Description:

Cartridge case is all aluminum; loaded with smokeless powder and No. 6 copper-coated lead shot.

Purpose:

The cartridge is intended for use, in survival weapons, against small game.

Tabulated Data:

DODAC---------- 1305-A055
Weight---------- 430 grain
Length---------- 2.690 inch
Tracer---------- NA
Primer---------- Percussion
Fuze---------- NA
Explosive:
Type---------- NA
Weight---------- NA
Incendiary:
Type---------- NA
Weight---------- NA
Propellant:
Type---------- Smokeless Powder
Weight---------- 7 grain

Performance:

Chamber pressure---------- 13,000 psi
Velocity---------- 960 fps, 3 ft from muzzle

Shipping and Storage Data:

Quantity-distance class/SCG---------- 1.4S
Storage code---------- Class V
DOT shipping class---------- C
DOT designation---------- SMALL ARMS AMMUNITION
Drawing number---------- 7553403

References:

TM 9-1300-206
SB 700-20

CARTRIDGE, 10 GAGE, SHOTGUN, BLANK

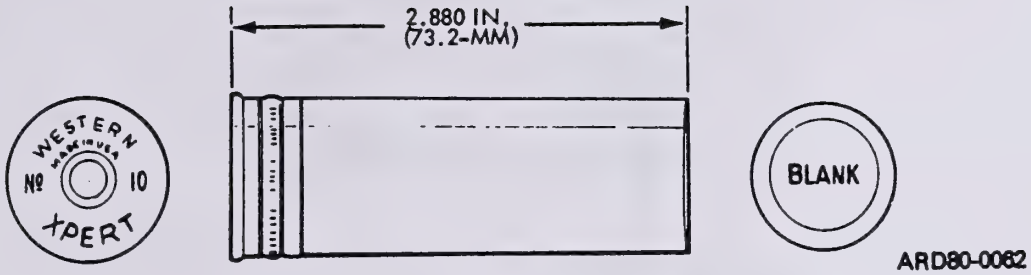

Type Classification:

Std - OTCM 36524

Use:

This is an optional use item for reveille and retreat salutes; fired in the 3 inch gun, 75-mm gun, 75-mm howitzer, or 105-mm howitzer.

Description:

Cartridge is similar to standard shotgun cartridges but contains no lead shot. It has a paper cartridge case. The forward closing Disc is marked "BLANK".

Purpose:

The cartridge is designed to produce a noise when initiated. Used as a salute item in large caliber weapons. The blank is inserted either in a prepared cartridge case or breech block of the weapon being used.

Tabulated Data:

DODAC ---------- 1305-A010
Weight ---------- 290 grain
Length ---------- 2.880 inch
Tracer ---------- NA
Primer ---------- Percussion
Fuze ---------- NA
Explosive:
  Type ---------- NA
  Weight ---------- NA
Incendiary:
  Type ---------- NA
  Weight ---------- NA
Propellant:
  Type ---------- Black powder
  Weight ---------- 8 drams

Performance:

Chamber pressure ---------- NA
Velocity ---------- NA

Shipping and Storage Data:

Quantity-distance class/SCG -- 1.4S
Storage code ---------- Class V
DOT shipping class ---------- C
DOT designation ---------- SMALL ARMS AMMUNITION
Drawing number ---------- 10524632

References:

TM 9-1300-206
SB 700-20

CARTRIDGE, 12 GAGE, SHOTGUN, No. M19

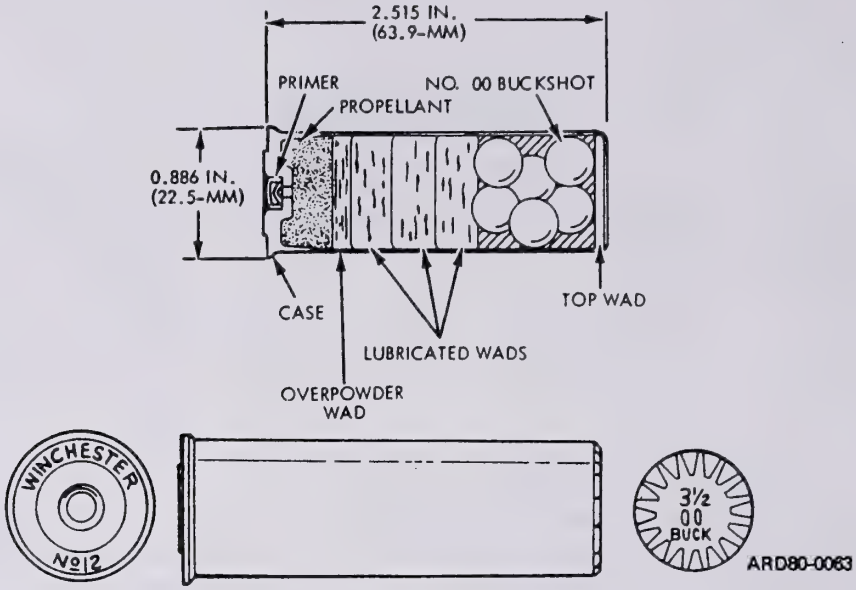

Type Classification:

Std - OTCM36841

Use:

For Military issue 2-3/4 inch Chamber shotguns.

Description:

All brass cartridge case, loaded with smokeless powder and No. 00 Commercial Shot.

Purpose:

The cartridge is intended for guard and combat use.

Tabulated Data:

DODAC	1305-A011
Weight	930 grain
Length	2.515 inch
Tracer	NA
Primer	Percussion
Fuze	NA
Explosive:	
Type	NA
Weight	NA
Incendiary:	
Type	NA
Weight	NA
Propellant:	
Type	Smokeless pow
Weight	26 grain

Performance:

Chamber pressure	11,000 psi
Velocity	1125 fps, 3 ft from muzzle

Shipping and Storage Data:

Quantity-distance class/SCG	1.4S
Storage code	Class V
DOT shipping class	C
DOT designation	SMALL ARMS AMMUNITION
Drawing number	7640981

References:

TM 9-1005-303-14
TM 9-1300-206
SB 700-20

CARTRIDGE, 12 GAGE, SHOTGUN, No. M257

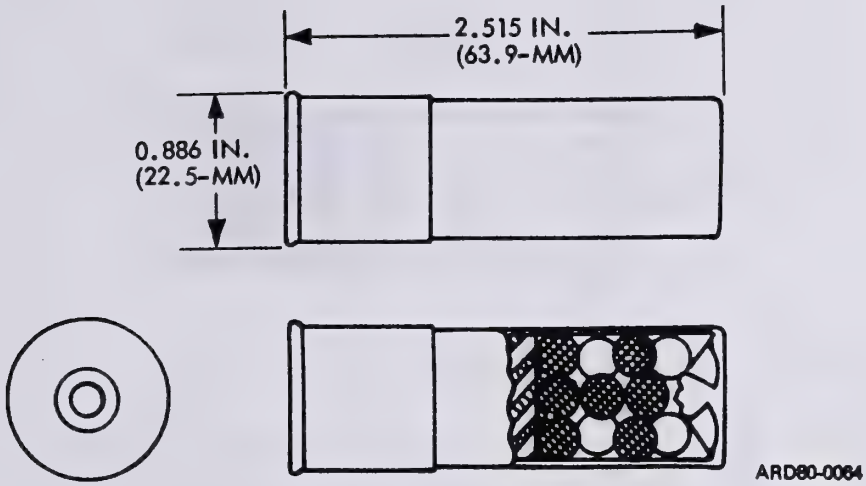

Type Classification:

Terminated - MSR - 08752013

Use:

Military Issue Shotgun, 20 inch Full Choke Barrel.

Description:

Plastic ctg case; loaded with smokeless powder and No. 4 hard lead antimony pellets.

Purpose:

The cartridge is intended for guard duty and for riot control weapons.

Tabulated Data:

DODAC	1305-A011
Weight	748 grain
Length	2.515 inch
Tracer	NA
Primer	Percussion
Fuze	NA
Explosive:	
Type	NA
Weight	NA
Incendiary:	
Type	NA
Weight	NA
Propellant:	
Type	Smokeless powder
Weight	MBR

Performance:

Chamber pressure	11,000 psi
Velocity	1335 fps, 3 ft from muzzle

Shipping and Storage Data:

Quantity-distance class/SCG	1.4S
Storage code	Class Y
DOT shipping class	C
DOT designation	SMALL ARMS AMMUNITION
Drawing number	10542446

References:

TM 9-1005-303-14
TM 9-1300-206
SB 700-20

CARTRIDGE, 12 GAGE, SHOTGUN, No. M274

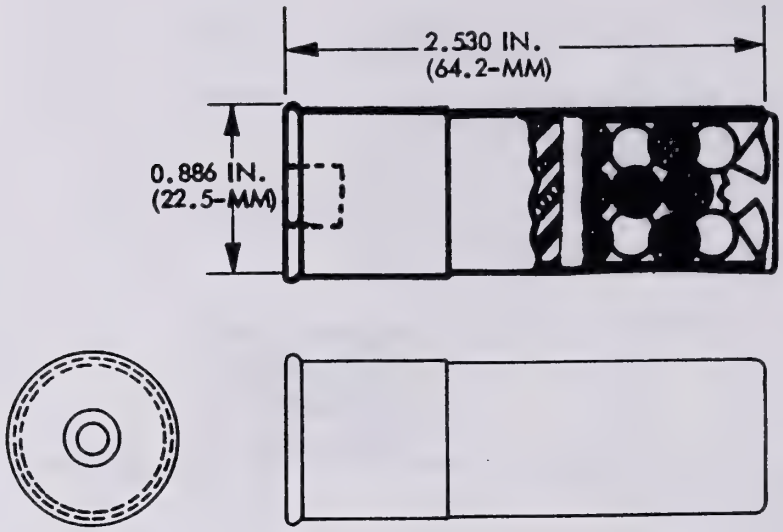

ARD80-0065

Type Classification:

OBS - MSR11756003

Use:

For Military Issue, Riot Type Shotgun, 20 inch Barrel Cylinder Bore.

Description:

May be paper or plastic ctg case, loaded with smokeless powder and No. 4 hard chilled shot.

Purpose:

The cartridge is intended for use against small game and for riot control weapons.

Tabulated Data:

DODAC	1305-A011
Weight	740 grain
Length	2.530 inch
Tracer	NA
Primer	Percussion
Fuze	NA
Explosive:	
Type	NA
Weight	NA
Incendiary:	
Type	NA
Weight	NA
Propellant:	
Type	Smokeless pow
Weight	MBR

Performance:

Chamber pressure	11,000 psi
Velocity	1255 fps, 3 ft from muzzle

Shipping and Storage Data:

Quantity-distance class/SCG	1.4S
Storage code	Class V
DOT shipping class	C
DOT designation	SMALL ARMS AMMUNITION
Drawing number	10542495

References:

TM 9-1005-303-14
TM 9-1300-206
SB 700-20

CARTRIDGE, 12 GAGE, SHOTGUN, No. 00, M162

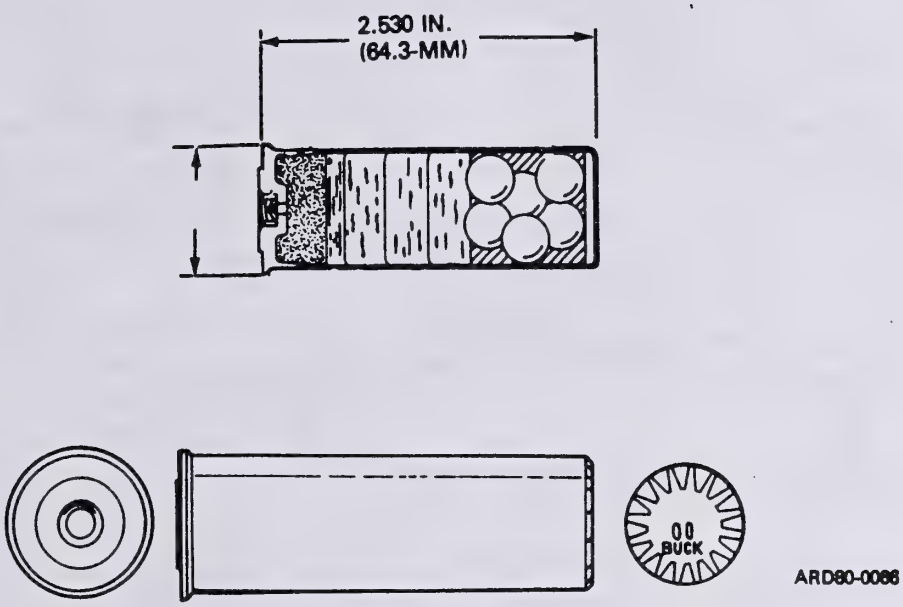

Type Classification:

LP OTCM 38036

Use:

Military Issue Shotguns, 2-3/4 inch Chamber.

Description:

All plastic ctg case, loaded with smokeless powder and No. 00 Commercial Shot.

Purpose:

The cartridge is intended for guard and combat use.

Tabulated Data:

DODAC	1305-A011
Weight	0.736 grain
Length	2.530 inch
Tracer	NA
Primer	Percussion
Fuze	NA
Explosive:	
Type	NA
Weight	NA
Incendiary:	
Type	NA
Weight	NA
Propellant:	
Type	Smokeless powder
Weight	MBR

Performance:

Chamber pressure	11,000 psi
Velocity	1325 fps, 3 ft from muzzle

Shipping and Storage Data:

Quantity-distance class/SCG	1.4S
Storage code	Class V
DOT shipping class	C
DOT designation	SMALL ARMS AMMUNITION
Drawing number	10522423

References:

TM 9-1005-303-14
TM 9-1300-206
SB 700-20

CARTRIDGE, 7.62-MM, BALL, M80

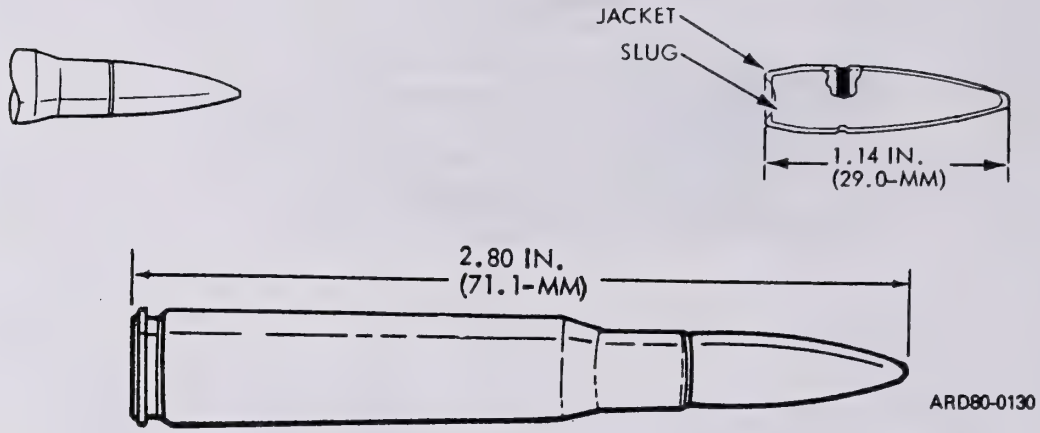

Type Classification:

Std - MSR 07798001

Use:

Machine Guns, 7.62-MM, M60, M219 and M240; Rifle, 7.62-MM, M14.

Description:

BALL Cartridge. This cartridge is identified by a plain bullet tip.

Purpose:

The purpose is intended for use against personnel and unarmored targets.

Tabulated Data:

DODAC	1305-A122
Weight	392 grain
Length	2.80 inch
Tracer	NA
Primer	Percussion
Fuze	NA
Explosive:	
Type	NA
Weight	NA
Incendiary:	
Type	NA
Weight	NA
Propellant:	
Type	WC 846
Weight	46 grain
Projectile:	
Weight	146 grain

Performance:

Chamber pressure	50,000 psi
Velocity	2750 fps, 78 ft from muzzle

Shipping and Storage Data:

Quantity-distance class/SCG	1.4S
Storage code	Class V
DOT shipping class	C
DOT designation	SMALL ARMS AMMUNITION
Drawing number	10521998

References:

TM 9-1005-223-10
TM 9-1005-224-10
TM 9-1005-233-10
TM 9-1005-243-12
TM 9-1005-247-12
TM 9-1005-257-12
TM 9-1005-262-14
TM 9-1005-298-12
TM 9-1005-313-10
TM 9-1300-206
SB 700-20

CARTRIDGE, 7.62-MM, BALL, M80 (Overhead Fire Application)

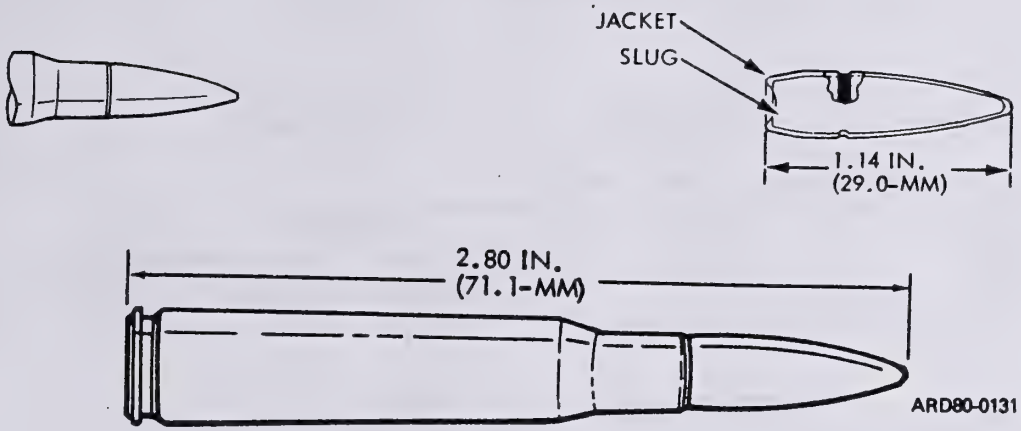

Type Classification:

Std - MSR 07798001

Use:

Machine Guns, 7.62-MM, M60, M219 and M240.

Description:

BALL Cartridge. This cartridge is identified by a plain bullet tip.

Purpose:

This cartridge is used in machine guns for firing over the heads of troops being trained in field exercises. Stringent production control and screening of ammunition lots ensure the safety of personnel operating immediately below the trajectory of the fired bullets.

Tabulated Data:

DODAC	1305-A166
Weight	392 grain
Length	2.80 inch
Tracer	NA
Primer	Percussion
Fuze	NA
Explosive:	
Type	NA
Weight	NA
Incendiary:	
Type	NA
Weight	NA
Propellant:	
Type	WC 846
Weight	46 grain
Projectile:	
Weight	149.0 grain

Performance:

Chamber pressure	50,000 psi
Velocity	2750 fps, 78 ft from muzzle

Shipping and Storage Data:

Quantity-distance class/SCG	1.4S
Storage code	Class V
DOT shipping class	C
DOT designation	SMALL ARMS AMMUNITION
Drawing number	10523088

References:

TM 9-1005-223-10
TM 9-1005-224-10
TM 9-1005-233-10
TM 9-1005-243-12
TM 9-1005-247-12
TM 9-1005-257-12
TM 9-1005-262-14
TM 9-1005-298-12
TM 9-1005-313-20
TM 9-1005-313-34
TM 9-1300-206
SB 700-20

CARTRIDGE, 7.62-MM, BLANK, M82

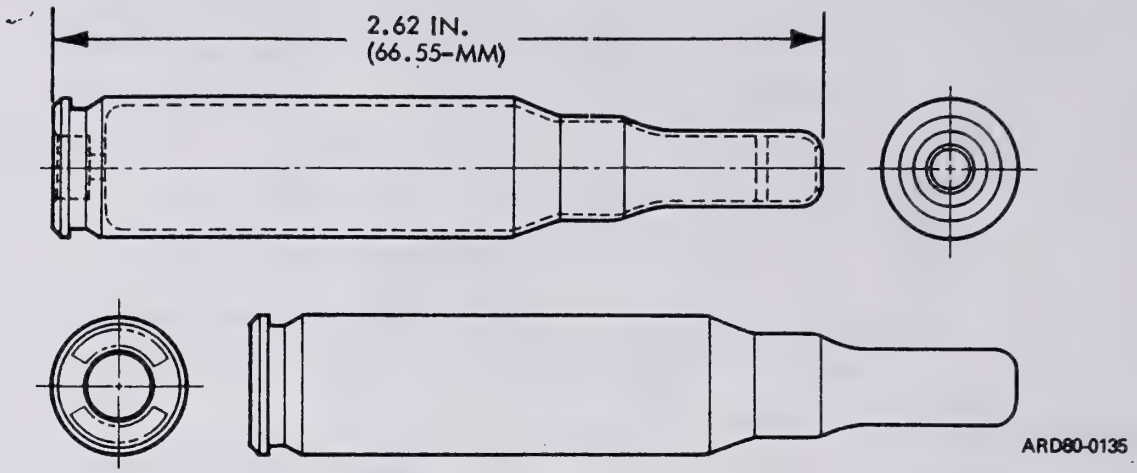

Type Classification:

Std - OTCM 36841

Use:

Machine-Guns, 7.62-MM, M60, M219 and M240; Rifle, 7.62-MM, M14.

Description:

BLANK Cartridge. The cartridge is identified by its double tapered neck and the absence of a bullet.

Purpose:

The cartridge is used in rifles and machine guns equipped with blank firing attachments to simulate firing in training exercises and for saluting purposes.

Tabulated Data:

DODAC ---------- 1305-A112
Weight ---------- 235 grain
Length ---------- 2.62 inch
Tracer ---------- NA
Primer ---------- Percussion
Fuze ---------- NA
Explosive:
  Type ---------- NA
  Weight ---------- NA
Incendiary:
  Type ---------- NA
  Weight ---------- NA

Propellant:
  Type ---------- SR 8231
  Weight ---------- 15 grain

Performance:

Chamber pressure ---------- NA
Velocity ---------- NA

Shipping and Storage Data:

Quantity-distance class/SCG -- 1.4S
Storage code ---------- Class V
DOT shipping class ---------- C
DOT designation ---------- SMALL ARMS AMMUNITION
Drawing number ---------- 8597283

References:

TM 9-1005-223-10
TM 9-1005-224-10
TM 9-1005-233-10
TM 9-1005-243-12
TM 9-1005-247-12
TM 9-1005-257-12
TM 9-1005-262-14
TM 9-1005-298-12
TM 9-1005-313-20
TM 9-1005-313-34
TM 9-1300-206
SB 700-20

CARTRIDGE, 9-MM, BALL

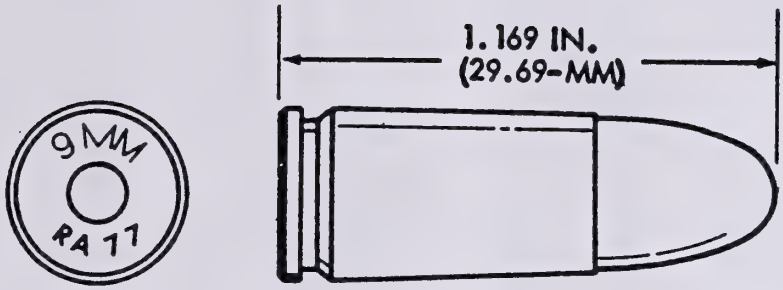

ARD80-0136

Type Classification:

Commercial

Use:

Modified M3 Submachine Gun or Commercial Weapons. (Use in M9 Pistol not Authorized.)

Description:

BALL Cartridge.

Purpose:

The cartridge is intended for use against personnel.

Tabulated Data:

DODAC	1305-A360
Weight	182 grain
Length	1.169 inch
Tracer	NA
Primer	Percussion
Fuze	NA
Explosive:	
Type	NA
Weight	NA
Incendiary:	
Type	NA
Weight	NA
Propellant:	
Type	Commercial
Weight	MBR

Performance:

Chamber pressure	36,000 psi
Velocity	1340 fps, 15 ft from muzzle

Shipping and Storage Data:

Quantity-distance class/SCG	1.4S
Storage code	Class V
DOT shipping class	C
DOT designation	SMALL ARMS AMMUNITION
Drawing number	10542448

References:

TM 9-1300-206
SB 700-20

TABLE 18-1. SMALL ARMS AMMUNITION

Caliber	Ammunition	Clip	Magazine	Link	Weapon used
5.56mm	Ball M193 Tracer M196 Grenade M195 Dummy M199 Blank M200 High Pressure Test, M197	10 rd	20 & 30 rd		M231 Sub-Machine Gun for M196 tracer only. M16/M16A1 rifle.
	M855 M856			M27	Stoner M63 (Navy) and M249 machine guns.
7.62mm	Ball M59, Ball M80 Tracer M62 AP, M61 Dummy 63 Blank M82 High Pressure Test M60	5 rd	20 rd	M13 open loop for MG	M14 rifle; M60, M73, M219, M240*, and M134 machine guns.
	Grenade M64				M14 rifle only.
	Dummy M172				M60 MG only.
	Frangible M160				M219 MG only.
	Ball match M118				M14 rifle only.
	Ball match M852				M14 rifle only.
			NOTE 10 rd clip f/M16A1. 5 rd clip f/M14. 20 rd mag f/M16A1. 30 rd mag f/M16A1. 20 rd mag f/M14.		
.Cal .45	Ball, M1911 Blank M9 High Pressure Test M1		7 rd for pistol 30 rd for sub-machine gun.	N/A	Pistol M1911 & M1911A1. Sub-machine gun M3 & M3A1.

*M240 Machine Gun only fires the Ball M80 and Tracer M62.

Table 18-1. Small Arms Accessories—Continued

Caliber	Ammunition	Clip	Magazine	Link	Weapon used
Cal .50	Ball M2 Ball M33	N/A	N/A	**M15A2 Open loop w/85 MG	M85 Machine Gun.
	AP M2 API M8 API-T M20 Incend M1 Incend M23 Tracer M1 Tracer M10 Tracer M17 Dummy M2 High Pressure Test	N/A	N/A	***M9 & M2 closed loops w/M2 MG.	M2 Machine Gun only.
	Blank M1 Blank M1A1	N/A	N/A	***M9 & M2 closed loops w/M2 MG.	M2 Machine Gun only.
	Spotter-Tracer —M48A2	8rd	—	M15A1	Rifle, spotting M8C
	Spotter-Tracer T249E2	8rd	—	M15A1	Rifle, spotting M8C
	Spotter-Tracer M251	8rd	—	M15A1	Rifle, spotting M8C

NOTE
**Link M15A2 Open Loop used w/M85 Machine Gun only.
***Link M2 and M9 Closed loop used w/M2 Machine Gun only.

Caliber	Ammunition	Link	Weapon (Gun)
20mm	HEI-T-SD M246/M246A1 HEI M56A3/M56A4 TP-T M220 TP M55A2 Dummy M51A2	M14 series	M167A1 (M168 Cannon)
20mm	API-T M52E1 API M53 HEI M56A3/M56A4 HEI-T M242 HEI-T-SD M246/M246A1 TP M55A2 TP-T M220 Dummy M51A2	M12 Metallic Link for M39 Cannon. M14A2 for M61 cannon.	M39, M61

CARTRIDGE, CALIBER .38, BALL

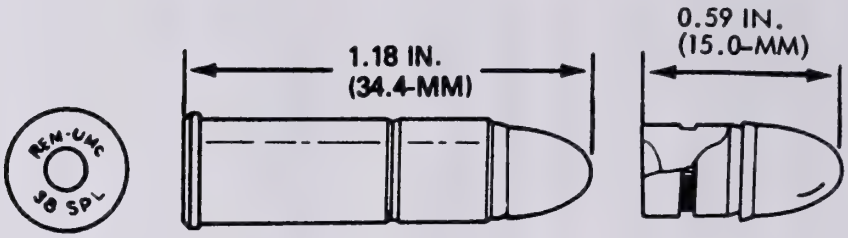

ARD80-0088

Type Classification:

OBS - MSR 11756003

Use:

For .38 Caliber weapons.

Description:

BALL Cartridge with unjacketed lead bullet.

Purpose:

This cartridge is for CONUS-guard or security use in caliber .38 weapons.

Tabulated Data:

DODAC---------- 1305-A408
Weight---------- 196 grain
Length----------1.18 inch
Tracer---------- NA
Primer----------Percussion
Fuze----------NA
Explosive:
Type---------- NA
Weight----------NA
Incendiary:
Type---------- NA
Weight----------NA

Propellant:
Type---------- Smokeless powder
Weight---------- MBR

Performance:

Chamber pressure----------13,000 psi
Velocity----------725 fps, 15 ft from muzzle

Shipping and Storage Data:

Quantity-distance class/SCG---1.4S
Storage code----------Class V
DOT shipping class----------C
DOT designation----------SMALL ARMS AMMUNITION
Drawing number----------10524005

References:

TM 9-1005-206-14P/1
TM 9-1005-206-14P/3
TM 9-1300-206
SB 700-20

TM 43-0001-30

TECHNICAL MANUAL

ARMY AMMUNITION DATA SHEETS

FOR

ROCKETS
ROCKET SYSTEMS
ROCKET FUZES
ROCKET MOTORS

(Federal Supply Class 1340)

This copy is a reprint which includes current pages from Changes 1 and 2.

HEADQUARTERS, DEPARTMENT OF THE ARMY

DECEMBER 1981

APERS	Antipersonnel
AR	Army Regulation
AT	Antitank
BD	Base detonating
BE	Base ejection
CP	Candle power
DA	Department of the Army
DS	Discarding sabot
FM	Field manual
FPS	Feet per second
FT	Feet
G's	Force of Gravity
HE	High explosive
HEAT-T-MP	High explosive antitank with tracer, multi-purpose
HEDP	High explosive dual purpose
HEI	High explosive incendiary
HEP	High explosive plastic
HERA	High explosive, rocket assisted
HVAP	Hypervelocity, armor piercing
HVTP	Hypervelocity, target practice
Illum	Illuminating
JATO	Jet assisted take off
LAW	Light antitank weapon
(LP)-T	Test (DODAC)
LSFFAR	Low-spin folding-fin aircraft rocket
Mod	Modified
MM	Millimeter
MPS	Meters per second
MPSM	Multipurpose sub-munitions
MS	Milliseconds
MT	Mechanical time
MTSQ	Mechanical time and super-quick
MV	Muzzle velocity
OBS	Reclassified obsolete
PD	Point detonating
PDSQ	Point detonating super-quick
PI	Point initiating
PIBD	Point initiating, base detonating
Prox	Proximity
PWP	Plasticized white phosphorous
RAD	Ram air decelerator
RAP	Rocket assisted projectile
RC	Resistance capacitance
RF	Radio frequency
RPS	Revolutions per second
S&A	Safety and arming device
SC	Supply catalogs
SD	Self destroying
Sec	Seconds
SM	Supply manual
SQ	Super-quick
T	Time fuze or for training only
-T	With tracer
TB	Technical bulletin
TM	Technical manual
TP	Target practice
TSQ	Time super-quick
VX	Persistent toxic (casualty) nerve gas
WP	White phosphorous

ROCKET, HIGH-EXPLOSIVE, 3.5-INCH: AT, M28A2

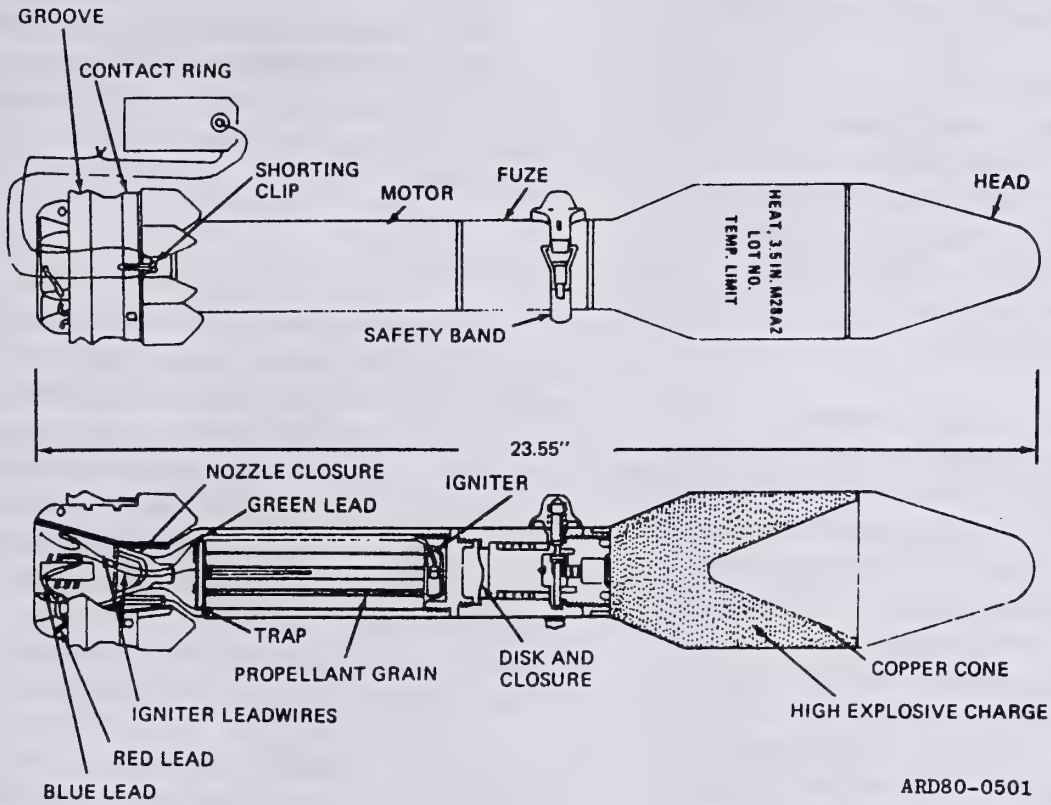

Type Classification:

STD (LCC-B) OTCM 36841 Jul 58

Use:

The M28A2 HEAT rocket is used primarily against armored targets, tanks and secondary targets, such as gun emplacements, pillboxes and personnel. It is capable of penetrating heavy armor at angles of impact greater than 30°. In an antipersonnel role, it has a fragmentation area 10 yd wide and 20 yd deep.

Description:

a. The warhead is cylindrical and tapered. The forward end, called the ogive, is thin metal and hollow. The rear end, threaded internally to receive the fuze which is encircled by a safety band. The warhead contains a copper cone whose apex faces aft and acts to shape the high explosive charge Composition B (Comp B).

b. The base detonating (BD) rocket fuze M404A2 consists of a body which contains the functioning parts; a safety band, a detonator and a booster pellet. The fuze body and safety band are olive drab. The fuze mechanism consists of an activating plunger, a setback spring, a setback sleeve, a firing pin assembly, a detent spring, an ejection pin and an ejection spring. The spring-loaded ejection pin passes through the fuze body.

c. The motor assembly consists of a tube which houses the propellant and igniter. The fin assembly is securely attached to this tube. The front end of the tube is assembled to the base of the fuze. The rear end forms a nozzle. The cylindrical motor cavity is divided into four

sections by two spacer plates which support the grains of propellant powder.

d. Each grain of propellant is 5-in. long and approximately 3/8-in. in diameter. Three grains are placed in each of the four sections formed by the spacer plates. Each lot of propellant is adjusted at the time of manufacture to give standard velocity. The igniter ignites the propellant.

e. The igniter consists of a short, cylindrical plastic case containing a small black powder charge and an electrical squib. It is assembled in the forward end of the motor on top of the propellant, spacer plates. The leads of the electrical squib, running parallel to the grains of propellant, pass from the igniter through the nozzle into the expansion cone. A green lead (ground) wire is connected to the aluminum support ring of the contact ring assembly. A red lead (positive) wire is attached to a pin which is insulated from the support ring, but is in contact with the copper contact band. These connections are positioned 180° apart. Blue lead is used for test purpose only.

f. The fin assembly consists of six aluminum alloy fins and a contact ring assembly. The contact ring assembly, which encircles the fins, consists of three rings. The aluminum support ring, which is innermost, is separated from the copper contact ring by a plastic insulating ring. The fins are spot welded to the expansion cone, and the expansion cone is press fitted to the rear of the motor tube. The M24 and the M66 off-route mines utilizing M28A2 HEAT rockets are described in TM 43-0001-36.

Differences between Models:

The BD rocket fuze M404A1 is similar to BD rocket fuze M404A2. The M404A1 differs principally in minor design changes of the functioning parts and the shape of the safety band.

Functioning:

a. When the safety band is removed, the ejection pin moves outward approximately 3/8 of an inch but still prevents all parts of the fuze mechanism from moving. When the rocket is in the firing chamber, the ejection pin is partially depressed by the chamber, thereby freeing the setback sleeve so it can move to the rear when the rocket is fired. The fuze is still safe, since the ejection pin prevents movement of the actuating sleeve and firing pin.

b. If it becomes necessary to remove the rocket from the launcher, the ejection pin will move outward and re-engage the setback sleeve. This returns the fuze to its original safe condition.

c. When the rocket is fired, the force of inertia causes the setback sleeve to move rearward. It is held in its rearward position by the lockpin. When the rocket leaves the muzzle of the launcher, the ejection pin is thrown clear of the fuze by the ejection pin spring. The fuze is then fully armed.

d. During flight, the firing pin lever and firing pin spring prevent the firing pin from striking the detonator. The creep spring retards the forward movement of the plunger and actuating sleeve. The action of the creep spring prevents the fuze from firing should the rocket strike light objects such as thin brush or undergrowth.

e. Upon impact with a more resistant object, the plunger and actuating sleeve move forward until the sleeve hits the firing pin lever. This causes the firing pin to strike and detonate the warhead.

Tabulated Data:

Rocket:
- Model ------ M28A2
- Type ------- Service
- Diameter ---- 3.5 in.
- Length (max) -- 23.55 in.
- Weight ----- 9.00 lb
- Performance:
  - Operating temperature limits ----- -20° to +120°F (-28.6 to +48.4C)
  - Muzzle velocity (at 70°F) (approx) ---- 325 ft/sec (99 mps)

Warhead:
- Type ------- HEAT
- Body ------- Steel
- Color ------ Olive drab w/yellow markings
- Diameter ---- 3.5 in.
- Length ------ 10.5 in.
- Weight ----- 4.47 lb

High-explosive train:
- Detonator ---- M41
- Booster (tetryl) ----- 0.17 oz (4.81 g)
- Filler (warhead)
  - Type ------ Comp B
  - Weight (approx) ---- 1.88 lb (.854 kg)

Fuze:
- Model ------ M404A1 or M404A2
- Type ------- Base detonating
- Diameter ---- 2.0 in.
- Length:
  - Overall ---- 3.48 in.
  - To shoulder (max) ------ 2.94 in.
- Weight ------ 1.16 lb
- Arming distance ----- 10 ft (3.05 m)

Motor:
- Diameter (at fins) ------- 3.5 in.
- Length ------ 10.41
- Weight ------ 3.30 lb
- Thrust ------ 6,000 - 10,000 lb

Propelling initiating train:
- Igniter:
  - Model ----- M20A1
  - Charge (black powder) ---- 0.13 ± 0.007 (3.5 ± .2 g)
  - Electric squib ------ M2
- Propelling charge:
  - Propellant:
    - Model ---- M7
    - Type ----- Solvent
  - Configuration - Monoperforated, cylindrical, extruded grains (12)
  - Weight ------ 0.44 lb (198 g)
  - Burning time:
    - At -20°F ---- 0.05 sec
    - At +120°F --- 0.02 sec

Launchers ----- M20, M20A1, M20A1B1, M20B1

Packing ------- 1 per metal/fiber container, 3 containers per wooden box

Box:
- Weight (with contents) ---- 53.0 lb

Dimensions:
W/metal
container --- 29-9/16 in. x
14-1/16 in. x
16-19/32 in.

W/fiber
container --- 29-3/16 in. x
13-7/8 in. x
16-19/32 in.

Cube:
W/metal
container ---- 1.6 ft^3
W/fiber
container ---- 1.5 ft^3

DODAC ------- 1340-H600

Shipping and storage data:
Storage class/
SCG --------- 1.1E
DOT shipping
class --------- A
DOT designation - ROCKET AMMUNITION WITH EXPLOSIVE PROJECTILES
Field storage -- Group E

Drawings:
Complete assy -- 9211744 (82-6-22
Loading assy
(head) -------- 82-16-36
Loading assy
(motor) ------ 9225502 (82-16-35)
Packing (inner) -- 7549038
Packing (outer) -- 7549040

References:
TM 9-1340-222-34

ROCKET,PRACTICE, 3.5-INCH M29A2

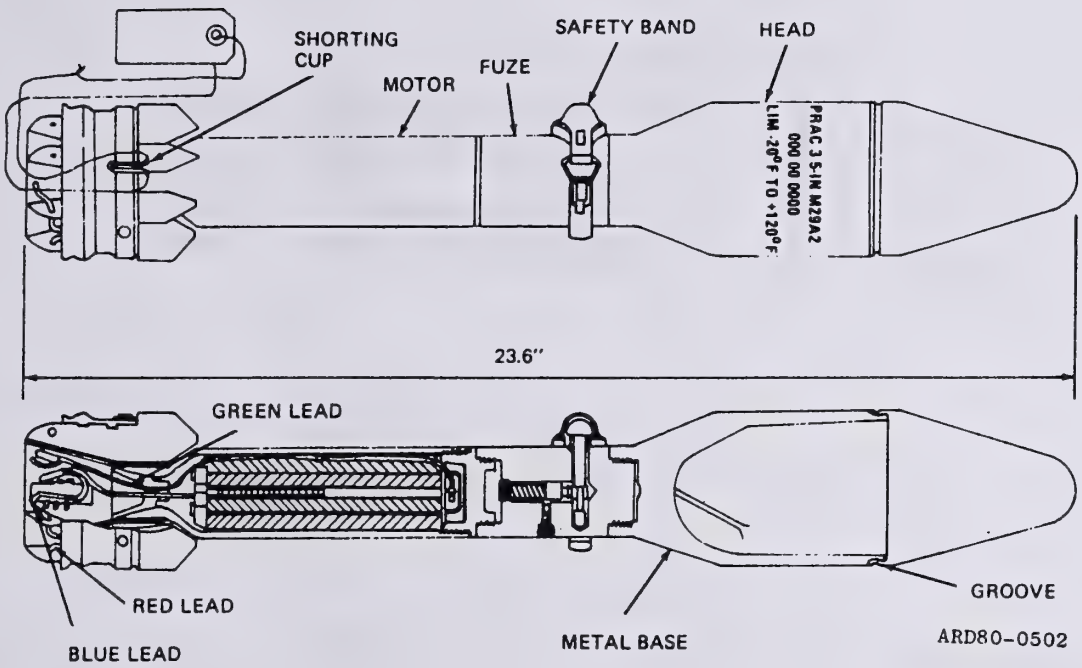

Type Classification:

STD (LLC-B) AMCTCM 36841 (M29A2)

Use:

For training personnel in use, care and handling of service rockets.

Description:

a. The warhead is completely inert. The practice rockets can be fired at buttoned-up, modified target tanks without danger to tank crews. The practice rockets have the same flight characteristics as the HEAT rocket.

b. The dummy fuze rocket M405 which serves as a coupling for the warhead and motor, is cylindrical. It is threaded externally at the forward end to fit into the warhead assembly, and internally at the rear end to receive the motor assembly. A safety band fits around the seals and fuze. This fuze incorporates a double-locking, bore-riding, round ejection pin assembly simulating that used in base detonating (BD) fuze M404A2. The body of the fuze and the safety band are painted blue.

c. The motor assembly consists of a tube which houses the propellant and igniter. The fin assembly is securely attached to this tube. The front end of the tube is assembled to the base of the fuze. The rear end forms a nozzle. The cylindrical motor cavity is divided into four sections by two spacer plates which support the grains of propellant powder.

d. Each grain of propellant is 5-in. long and approximately 3/8-in. in

CARTRIDGE, 12 GAGE, SHOTGUN, No. 00

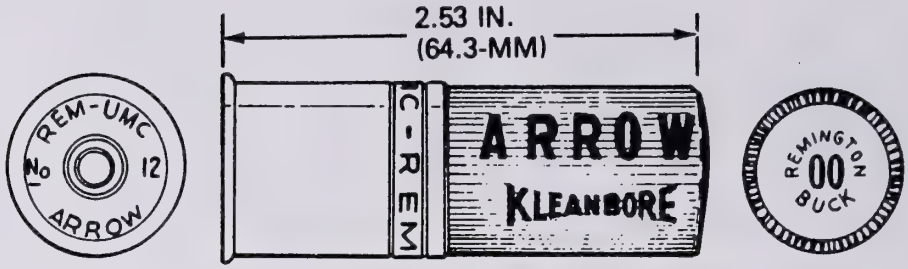

ARD80-0067

Type Classification:

Std OTCM 36841

Use:

For Military Issue Shotgun 2-3/4 inch Chamber.

Description:

Paper ctg case loaded with smokeless powder and No. 00 Commercial Shot.

Purpose:

The cartridge is intended for guard and combat use.

Tabulated Data:

DODAC	1305-A011
Weight	791 grain
Length	2.53 inch
Tracer	NA
Primer	Percussion
Fuze	NA
Explosive:	
Type	NA
Weight	NA
Incendiary:	
Type	NA
Weight	NA
Propellant:	
Type	Smokeless powder
Weight	MBR

Performance:

Chamber pressure	11,000 psi
Velocity	1325 fps, 3 ft from muzzle

Shipping and Storage Data:

Quantity-distance class/SCG	1.4S
Storage code	Class V
DOT shipping class	C
DOT designation	SMALL ARMS AMMUNITION
Drawing number	7553929

References:

TM 9-1005-303-14
TM 9-1300-206
SB 700-20

CARTRIDGE, CALIBER .30, CARBINE, BALL, M1

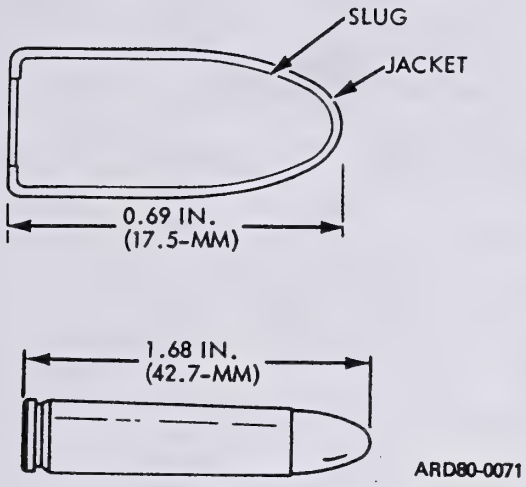

Type Classification:

OBS - MSR 11756003

Use:

For Caliber .30, Carbine, M1, M2 or M3.

Description:

BALL Cartridge. The cartridge is identifiable by the lack of bullet tip color code painting.

Purpose:

This cartridge is intended for use against personnel and unarmored targets.

Tabulated Data:

DODAC	1305-A181
Weight	196 grain
Length	1.68 inch
Tracer	NA
Primer	Percussion
Fuze	NA
Explosive:	
Type	NA
Weight	NA
Incendiary:	
Type	NA
Weight	NA
Propellant:	
Type	WC 820
Weight	13 grain
Projectile:	
Weight	111.0 grain

Performance:

Chamber pressure	40,000 psi
Velocity	1900 fps, 53 ft from muzzle

Shipping and Storage Data:

Quantity-distance class/SCG	1.4S
Storage code	Class V
DOT shipping class	C
DOT designation	SMALL ARMS AMMUNITION
Drawing number	6200954

References:

TM 9-1005-210-12
TM 9-1300-206
SB 700-20

CARTRIDGE, CALIBER .30, TRACER, M1

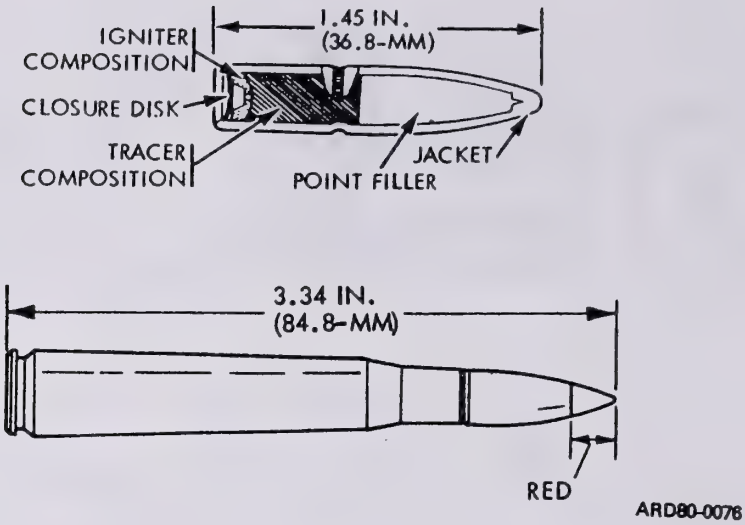

Type Classification:

OBS - MSR - 11756003

Use:

Machine Guns, Caliber .30, M37, M1919A4, M1919A6 and Rifle Caliber .30, M1.

Description:

TRACER Cartridge. The cartridge is identified by a red bullet tip.

Purpose:

The tracer element is intended to permit visible observation of the bullets in-flight path, or trajectory, to the target.

Tabulated Data:

DODAC	1305-A231
Weight	399 grain
Length	3.34 inch
Tracer	R256
Primer	Percussion
Fuze	NA
Explosive:	
Type	NA
Weight	NA
Incendiary:	
Type	NA
Weight	NA
Propellant:	
Type	IMR 4895
Weight	50 grain

Performance:

Chamber pressure	52,000 psi
Velocity	2665 fps, 78 ft from muzzle

Shipping and Storage Data:

Quantity-distance class/SCG	1.4S
Storage code	Class V
DOT shipping class	C
DOT designation	SMALL ARMS AMMUNITION
Drawing number	6006764

References:

TM 9-1005-210-12
TM 9-1005-212-10
TM 9-1005-222-12
TM 9-1300-206
SB 700-20

CARTRIDGE, CALIBER .30, BALL HIGH PRESSURE TEST, M1

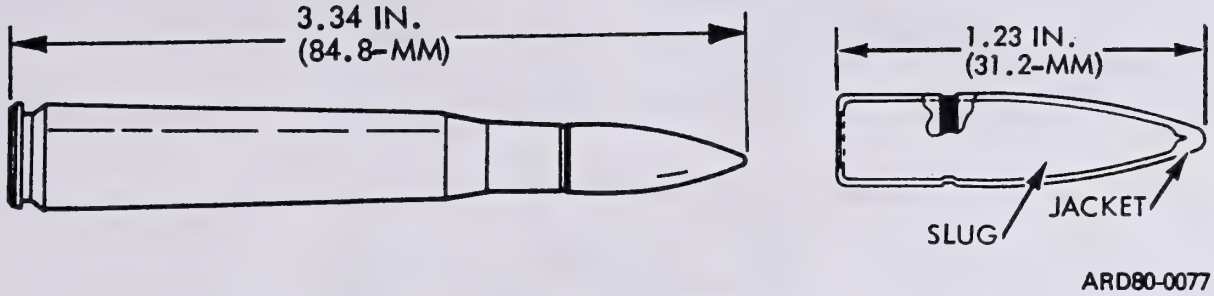

Type Classification:

Std - OTCM 37119

Use:

For all Caliber .30 Weapons other than carbines.

Description:

HIGH PRESSURE TEST Cartridge. The cartridge is identified by stannic-stained (silvered) cartridge case.

Purpose:

This cartridge is used to proof test caliber .30 rifles and machine guns during manufacture, test, or repair.

Tabulated Data:

DODAC	1305-A237
Weight	432 grain
Length	3.34 inch
Tracer	NA
Primer	Percussion
Fuze	NA
Explosive:	
Type	NA
Weight	NA
Incendiary:	
Type	NA
Weight	NA
Propellant:	
Type	IMR 4198
Weight	52 grain

Performance:

Chamber pressure	67,500 psi
Velocity	NA

Shipping and Storage Data:

Quantity-distance class/SCG	1.4S
Storage code	Class V
DOT shipping class	C
DOT designation	SMALL ARMS AMMUNITION
Drawing number	6016308

References:

TM 9-1005-210-12
TM 9-1005-212-10
TM 9-1005-222-12
TM 9-1300-206
SB 700-20

CARTRIDGE, CALIBER .30, BALL, M2

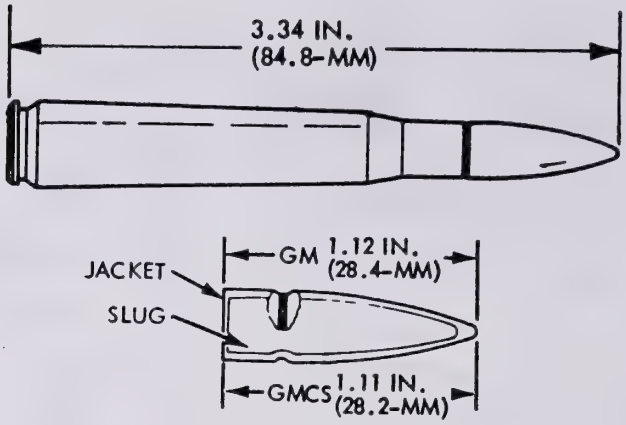

ARD80-0078

Type Classification:

OBS - MSR 11756003

Use:

Machine Guns, Caliber .30, M37, M1919A4, M1919A6, and Rifle Caliber .30, M1.

Description:

BALL Cartridge. The cartridge is identified by a plain bullet tip.

Purpose:

The cartridge is intended for use against personnel or unarmored targets.

Tabulated Data:

DODAC	1305-A212
Weight	416 grain
Length	3.34 inch
Tracer	NA
Primer	Percussion
Fuze	NA
Explosive:	
Type	NA
Weight	NA
Incendiary:	
Type	NA
Weight	NA
Propellant:	
Type	IMR 4895
Weight	50 grain

Performance:

Chamber pressure	50,000 psi
Velocity	2740 fps, 78 ft from muzzle

Shipping and Storage Data:

Quantity-distance class/SCG	1.4S
Storage code	Class V
DOT shipping class	C
DOT designation	SMALL ARMS AMMUNITION
Drawing number	6137544

References:

TM 9-1005-210-12
TM 9-1005-212-10
TM 9-1005-222-12
TM 9-1300-206
SB 700-20

CARTRIDGE, CALIBER .30, TRACER, M25

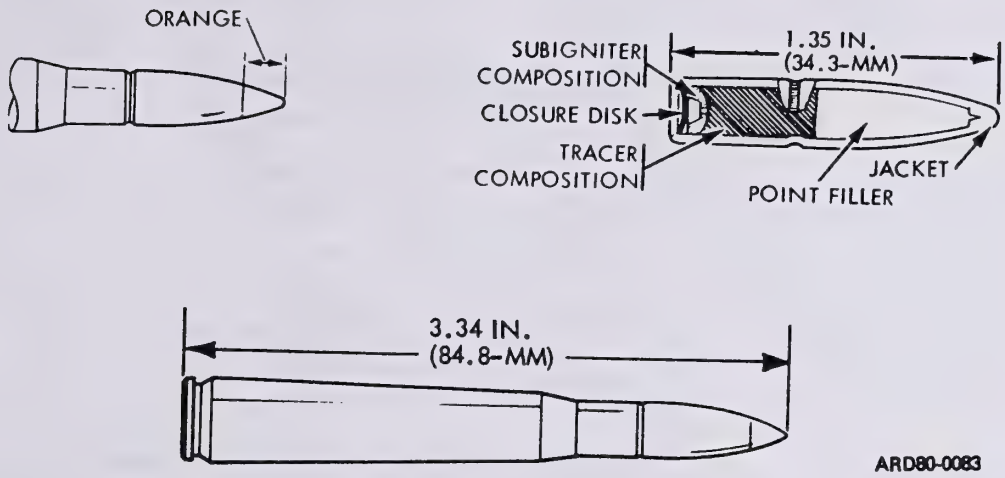

Type Classification:

OBS - MSR 11756003

Use:

Machine Guns, Caliber .30, M1917A1, M37, M1919A4, M1919A6, and Rifle, Caliber .30, M1.

Description:

TRACER Cartridge. The cartridge is identified by an orange bullet tip.

Purpose:

In flight, the bullet exhibits a trace of full luminosity from a point not greater than 75 yards from the muzzle of the weapon to a point not less than 900 yards from the muzzle. The cartridge is intended for use against personnel and unarmored targets.

Tabulated Data:

DODAC	1305-A230
Weight	401 grain
Length	3.34 inch
Tracer	R321
Primer	Percussion
Fuze	NA
Explosive:	
Type	NA
Weight	NA
Incendiary:	
Type	NA
Weight	NA
Propellant:	
Type	WC 852
Weight	50 grain
Projectile:	
Weight	145.5 grain

Performance:

Chamber pressure	50,000 psi
Velocity	2665 fps, 78 ft from muzzle

Shipping and Storage Data:

Quantity-distance class/SCG	1.4S
Storage code	Class V
DOT shipping class	C
DOT designation	SMALL ARMS AMMUNITION
Drawing number	7640667 (Brass Case) 7553949 (Steel Case)

References:

TM 9-1005-210-12
TM 9-1005-212-10
TM 9-1005-222-12
TM 9-1300-206
SB 700-20

CARTRIDGE, CALIBER .30, BALL, MATCH, M72

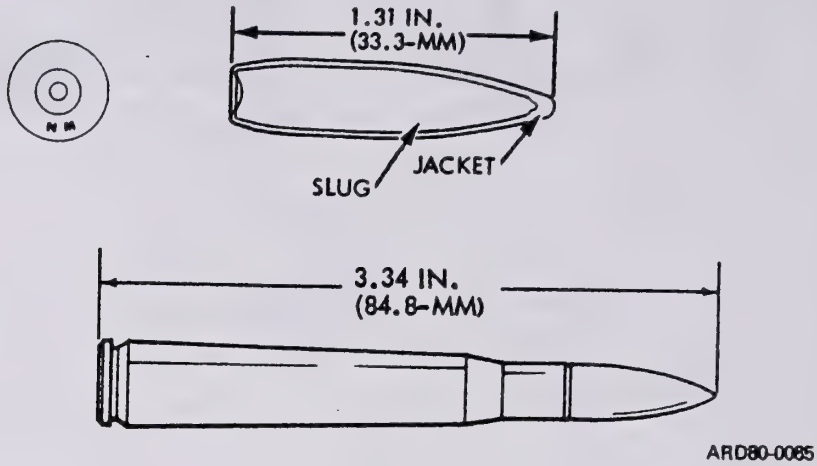

Type Classification:

Std - OTCM 37119.

Use:

Rifle, Claiber .30, M1 and National Match, Caliber .30, Rifles.

Description:

MATCH Cartridge. The cartridge is identified by head stampings on the base of the cartridge case with either the initials NM (National Match) or the word MATCH. The primer is uncrimped, the bullet has no crimped cannelure and the case is not crimped to the bullet.

Purpose:

This cartridge is not designed to be fired in any weapon except those designated as competition rifles.

Tabulated Data:

DODAC	1305-A247
Weight	425 grain
Length	3.34 inch
Tracer	NA
Primer	Percussion
Fuze	NA
Explosive:	
Type	NA
Weight	NA
Incendiary:	
Type	NA
Weight	NA
Propellant:	
Type	IMR 4895
Weight	50 grain

Performance:

Chamber pressure	50,000 psi
Velocity	2640 fps, 78 ft from muzzle

Shipping and Storage Data:

Quantity-distance class/ SCG	1.4S
Storage code	Class V
DOT shipping class	C
DOT designation	SMALL ARMS AMMUNITION
Drawing number	8595432

References:

TM 9-1005-222-12P/1
TM 9-1300-206
SB 700-20

CARTRIDGE, CALIBER .30, BLANK, M1909

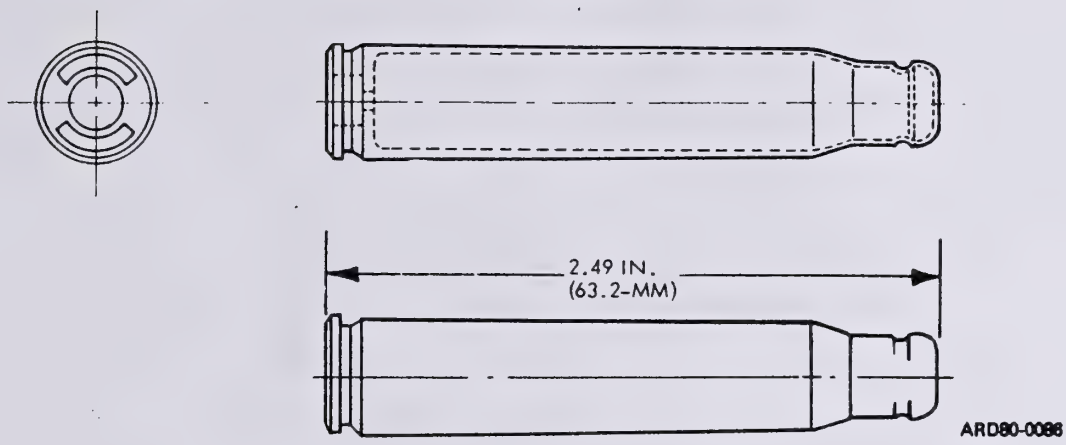

Type Classification:

OBS - MSR 11756003

Use:

Machine Guns, Caliber .30, M1919A4, M1919A6, and Rifle, Caliber .30, M1.

Description:

BLANK Cartridge. The cartridge is identified by the absence of a bullet and has a crimped cartridge case mouth.

Purpose:

The cartridge is used for simulated firing in training or for saluting purposes.

Tabulated Data:

DODAC---------- 1305-A222
Weight---------- 218 grain
Length----------2.49 inch
Tracer---------- NA
Primer----------Percussion
Fuze----------NA
Explosive:
Type---------- NA
Weight----------NA
Incendiary:
Type----------NA
Weight----------NA
Propellant:
Type----------SR 4990
Weight----------12 grain

Performance:

Chamber pressure----------NA
Velocity----------NA

Shipping and Storage Data:

Quantity-distance class/SCG---1.4S
Storage code----------Class V
DOT shipping class----------C
DOT designation----------SMALL ARMS AMMUNITION
Drawing number----------6006152

References:

TM 9-1005-210-12
TM 9-1005-212-10
TM 9-1005-222-12
TM 9-1300-206
SB 700-20

CARTRIDGE, CALIBER .45, BALL, HIGH PRESSURE TEST, M1

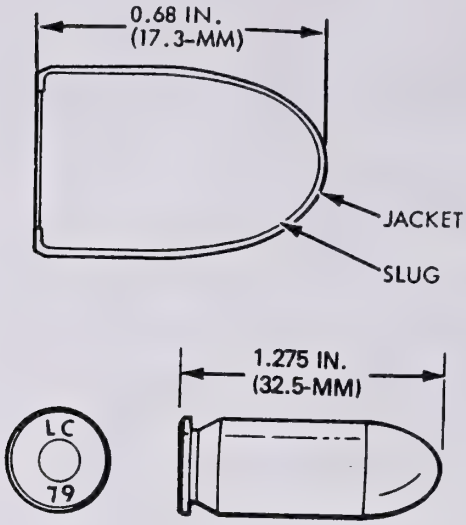

ARD80-0091

Type Classification:

Std - OTCM 36841

Use:

For Test of all Caliber .45 Weapons.

Description:

HIGH PRESSURE TEST Cartridge. The cartridge is identified by a stannic-stained (silvered) cartridge case.

Purpose:

The cartridge is used for proof testing Caliber .45 Pistols and Submachine Guns during manufacture, test, or repair.

Tabulated Data:

DODAC	1305-A480
Weight	332 grain
Length	1.275 inch
Tracer	NA
Primer	Percussion
Fuze	NA
Explosive:	
Type	NA
Weight	NA
Incendiary:	
Type	NA
Weight	NA
Propellant:	
Type	SR 7970
Weight	7 grain

Performance:

Chamber pressure	22,000 psi
Velocity	NA

Shipping and Storage Data:

Quantity-distance class/SCG	1.4S
Storage code	Class V
DOT shipping class	C
DOT designation	SMALL ARMS AMMUNITION
Drawing number	C6000502

References:

TM 9-1005-211-12
TM 9-1005-229-12
TM 9-1300-206
SB 700-20

CARTRIDGE, CALIBER .45, BLANK, M9

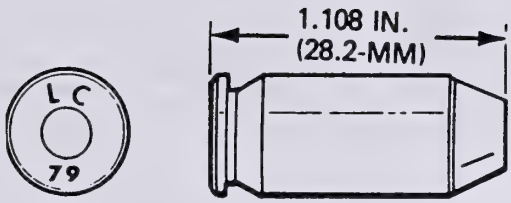

ARD80-0092

Type Classification:

Std - AMCTC 505

Use:

Pistol, Automatic, Caliber .45, M1911A1.

Description:

BLANK Cartridge. The cartridge is identified by the absence of a bullet and the tapered mouth of the cartridge case.

Purpose:

The cartridge is used for simulated firing in training manuevers and for saluting purposes.

Tabulated Data:

DODAC	1305-A476
Weight	104 grain
Length	1.108 inch
Tracer	NA
Primer	Percussion
Fuze	NA
Explosive:	
Type	NA
Weight	NA
Incendiary:	
Type	NA
Weight	NA
Propellant:	
Type	SR 4990
Weight	10 grain

Performance:

Chamber pressure	NA
Velocity	NA

Shipping and Storage Data:

Quantity-distance class/SCG	1.4S
Storage code	Class V
DOT shipping class	C
DOT designation	SMALL ARMS AMMUNITION
Drawing number	10523805

References:

TM 9-1005-211-12
TM 9-1300-206
SB 700-20

CARTRIDGE, CALIBER .45, TRACER, M26

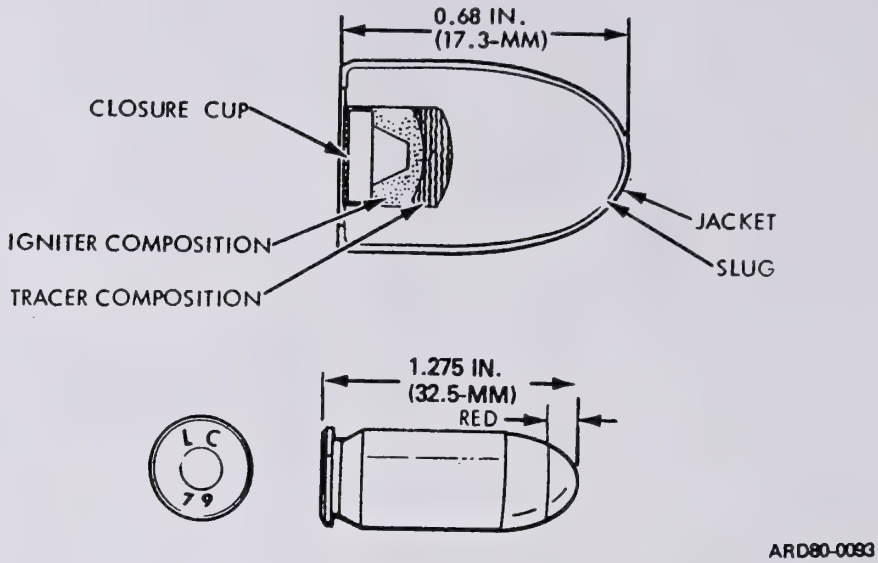

Type Classification:

CON - MSR 11756003

Use:

Submachine gun, Caliber .45, M3A1 and Pistol, Caliber .45, M1911A1.

Description:

TRACER Cartridge. The cartridge is identified by a red bullet tip.

Purpose:

The tracer is intended to permit observation of the bullets in-flight path or trajectory to the point of impact.

Tabulated Data:

DODAC	1305-A479
Weight	331 grain
Length	1.275 inch
Tracer	R256
Primer	Percussion
Fuze	NA
Explosive:	
Type	NA
Weight	NA
Incendiary:	
Type	NA
Weight	NA
Propellant:	
Type	SR 7970
Weight	6 grain

Performance:

Chamber pressure	19,000 psi
Velocity	885 fps, 25.5 ft from muzzle

Shipping and Storage Data:

Quantity-distance class/SCG	1.4S
Storage code	Class V
DOT shipping class	C
DOT designation	SMALL ARMS AMMUNITION
Drawing number	10534359

References:

TM 9-1005-211-12
TM 9-1005-229-12
TM 9-1300-206
SB 700-20

CARTRIDGE, CALIBER .50, TRACER, M1

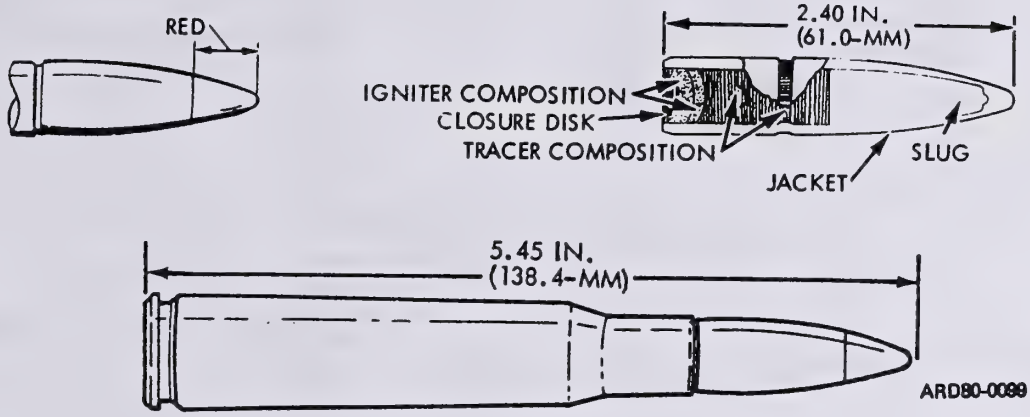

Type Classification:

OBS - MSR 11756003

Use:

Machine Guns, Caliber .50, M2 and M85.

Description:

TRACER Cartridge. The cartridge is identified by a red bullet tip.

Purpose:

The tracer is intended to permit visible observation of the bullets in-flight path or trajectory to the point of impact. Limited to CONUS for training purposes only.

Tabulated Data:

DODAC	1305-A591
Weight	1785 grain
Length	5.45 inch
Tracer	R256
Primer	Percussion
Fuze	NA
Explosive:	
Type	NA
Weight	NA
Incendiary:	
Type	NA
Weight	NA
Propellant:	
Type	IMR 5010
Weight	240 grain

Performance:

Chamber pressure	52,000 psi
Velocity	2700 fps, 78 ft from muzzle

Shipping and Storage Data:

Quantity-distance class/SCG	1.4C
Storage code	Class V
DOT shipping class	C
DOT designation	SMALL ARMS AMMUNITION
Drawing number	5544843

References:

TM 9-1300-206
TM 9-1305-200
SB 700-20

CARTRIDGE, CALIBER .50, BALL, HIGH PRESSURE TEST, M1

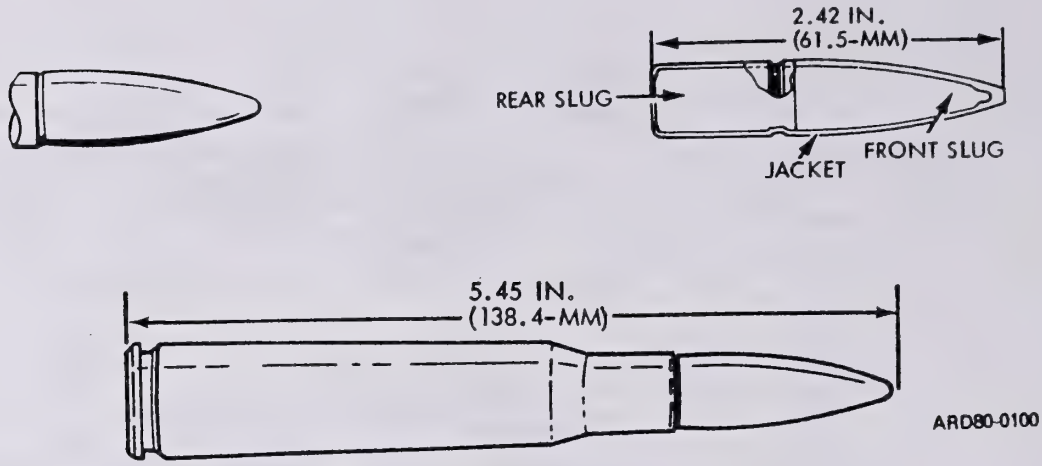

Type Classification:

Std - OTCM 36841

Use:

For all Caliber .50 Weapons except M8C Spotting Gun.

Description:

HIGH PRESSURE TEST Cartridge. This cartridge is identified by a stannic-stained (silvered) cartridge case.

Purpose:

The cartridge is intended for use in proof testing Caliber .50 Weapons, except the 106-MM Spotting Rifle, during manufacture, test, or repair.

Tabulated Data:

DODAC	1305-A575
Weight	2082 grain
Length	5.45 inch
Tracer	NA
Primer	Percussion
Fuze	NA
Explosive:	
Type	NA
Weight	NA
Incendiary:	
Type	NA
Weight	NA
Propellant:	
Type	WC 860
Weight	240 grain

Performance:

Chamber pressure	65,000 psi
Velocity	NA

Shipping and Storage Data:

Quantity-distance class/SCG	1.4S
Storage code	Class V
DOT shipping class	C
DOT designation	SMALL ARMS AMMUNITION
Drawing number	5544097

References:

TM 9-1005-213-10
TM 9-1005-231-10
TM 9-1300-206
SB 700-20

CARTRIDGE, CALIBER .50, BLANK, M1

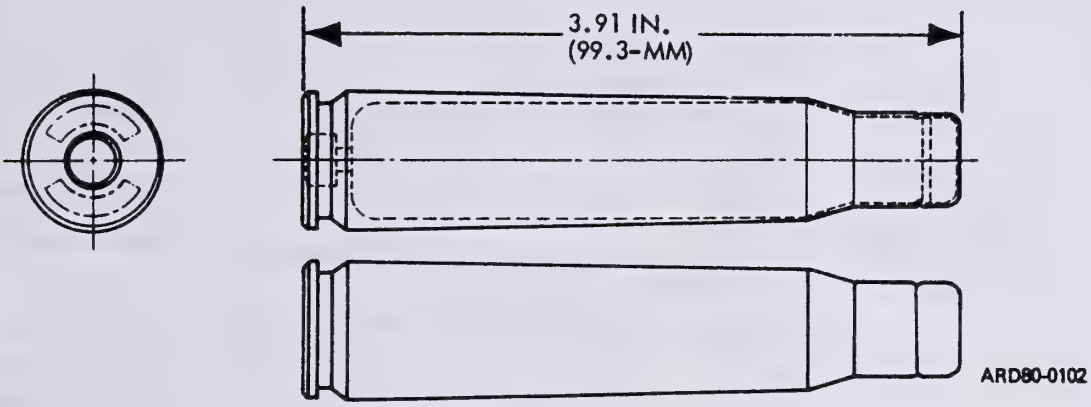

Type Classification:

CONT - OTCM 36841

Use:

Machine Gun, Caliber .50, M2 (Flexible only).

Description:

BLANK Cartridge. The cartridge is identified by the absence of a bullet and has a crimped cartridge case mouth.

Purpose:

This cartridge is used to simulate firing in training exercises.

Tabulated Data:

DODAC	1305-A558
Weight	917 grain
Length	3.91 inch
Tracer	NA
Primer	Percussion
Fuze	NA
Explosive:	
Type	NA
Weight	NA
Incendiary:	
Type	NA
Weight	NA
Propellant:	
Type	WC 150
Weight	46 grain

Performance:

Chamber pressure	NA
Velocity	NA

Shipping and Storage Data:

Quantity-distance class/SCG	1.4C
Storage code	Class V
DOT shipping class	C
DOT designation	SMALL ARMS AMMUNITION
Drawing number	7673517

References:

TM 9-1005-213-10
TM 9-1005-231-10
TM 9-1300-206
SB 700-20

CARTRIDGE, CALIBER .50, BLANK, M1A1

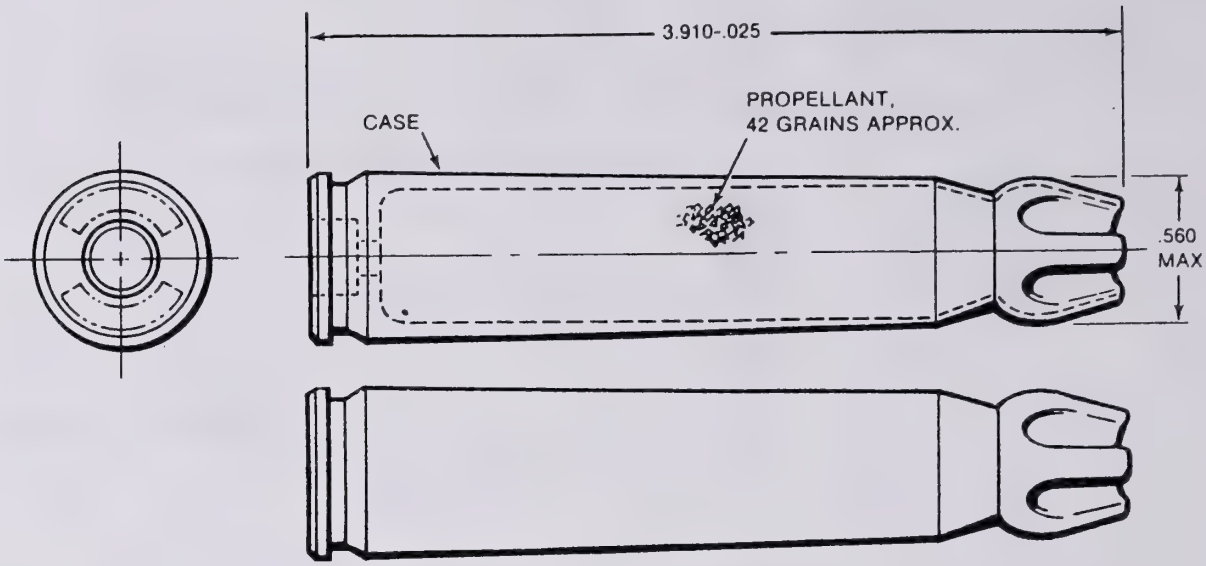

ARD 82-0330

Type Classification:

Std - MSR 02806015.

Use:

For use with the Machine Gun, Caliber .50 M2 with the M19 Blank Ammunition Firing Attachment, and with the Machine Gun, Caliber .50, M85 with the M20 Blank Firing Attachment.

Description:

BLANK Cartridge. This cartridge is identified by the absence of a bullet. The M1A1 differs from the M1 in that the M1A1 has a rosette crimp at the mouth. Also the M1A1 is loaded with Dupont Hi Skor 700 X propellant.

Purpose:

This cartridge is used to simulate firing in training exercises.

Tabulated Data:

DODAC	1305-A559
Weight	915 to 955 grains
Length	3.91 in.
Tracer	N/A.
Primer	Percussion
Fuze	N/A
Explosive:	
Type	N/A
Weight	N/A
Incendiary	N/A
Propellant:	
Type	Dupont Hi Skor 700 X

Propellant:— Continued
Weight (approx)------42 grains

Performance:

Chamber pressure-------N/A
Velocity----------N/A

Shipping and Storage Data:

Quantity-distance class------1.4
Storage code----------Class V
DOT shipping class----------C
DOT designation----------SMALL ARMS AMMUNITION
Drawing number----------9326760

References:

DARCOM 700-3-2

CARTRIDGE, CALIBER .50, BALL, M2

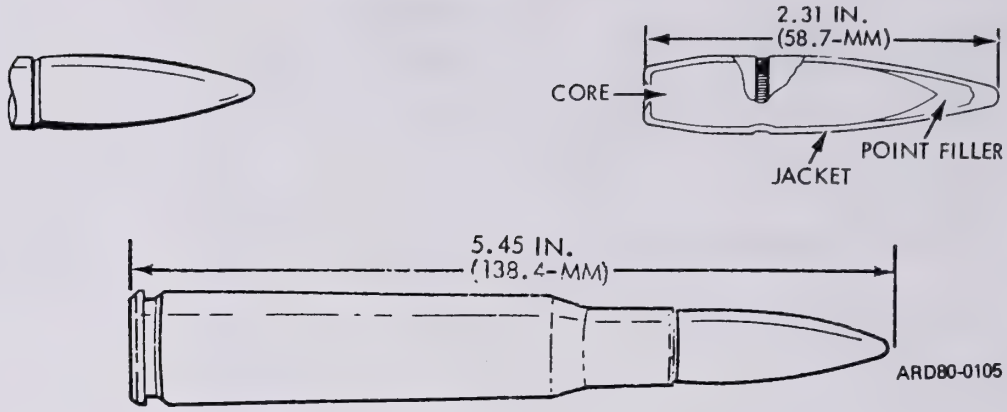

Type Classification:

Std - OTCM 36841

Use:

Machine Guns, Caliber .50, M2 and M85.

Description:

BALL Cartridge. The cartridge is identified by a plain bullet.

Purpose:

The cartridge is intended for use against personnel or unarmored targets.

Tabulated Data:

DODAC	1305-A552
Weight	1813 grain
Length	5.45 inch
Tracer	NA
Primer	Percussion
Fuze	NA
Explosive:	
Type	NA
Weight	NA
Incendiary:	
Type	NA
Weight	NA
Propellant:	
Type	WC 860
Weight	235 grain

Performance:

Chamber pressure	55,000 psi
Velocity	2810 fps, 78 ft from muzzle

Shipping and Storage Data:

Quantity-distance class/SCG	1.4C
Storage code	Class V
DOT shipping class	C
DOT designation	SMALL ARMS AMMUNITION
Drawing number	5577960

References:

TM 9-1005-213-10
TM 9-1005-231-10
TM 9-1300-206
SB 700-20

CARTRIDGE, CALIBER .50, TRACER, M10

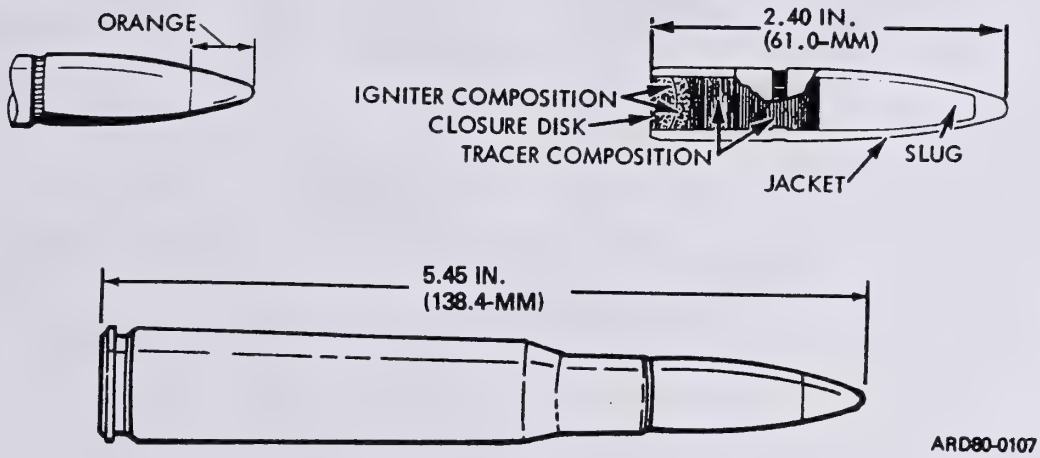

Type Classification:

Std - OTCM 37107

Use:

Machine Guns, Caliber .50, M2 and M85.

Description:

TRACER Cartridge. This cartridge is identified by an orange bullet tip.

Purpose:

This tracer cartridge exhibits a visible trace from a point not greater than 100 yards from the muzzle of the weapon to a point not less than 1600 yards from the muzzle.

Tabulated Data:

DODAC	1305-A570
Weight	1752 grain
Length	5.45 inch
Tracer	R-256
Primer	Percussion
Fuze	NA
Explosive:	
Type	NA
Weight	NA
Incendiary:	
Type	NA
Weight	NA
Propellant:	
Type	IMR 5010
Weight	240 grain

Performance:

Chamber pressure	54,000 psi
Velocity	2860 fps, 78 ft from muzzle

Shipping and Storage Data:

Quantity-distance class/SCG	1.4C
Storage code	Class V
DOT shipping class	C
DOT designation	SMALL ARMS AMMUNITION
Drawing number	7670296

References:

TM 9-1005-213-10
TM 9-1005-231-10
TM 9-1300-206
SB 700-20

CARTRIDGE, CALIBER. 50, TRACER, M17

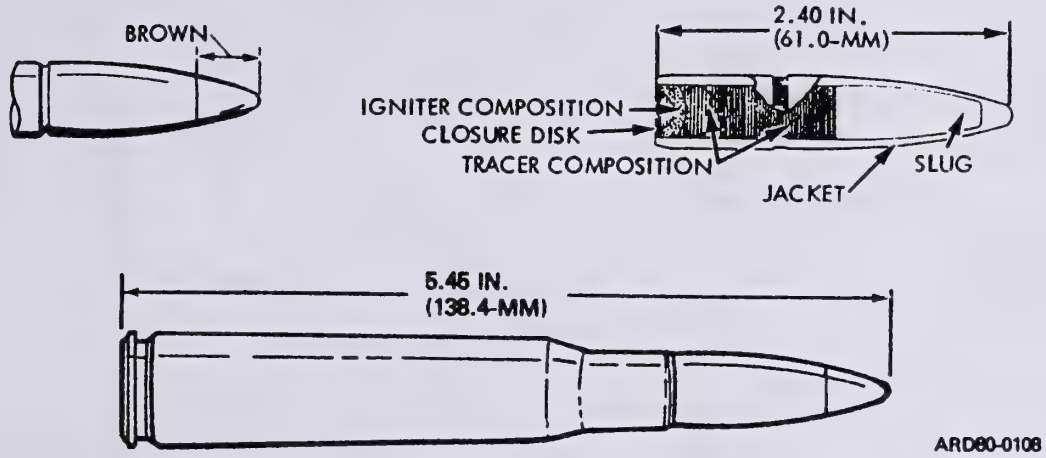

Type Classification:

CON - MSR 11756003

Use:

Machine Guns, Caliber .50, M2 and M85.

Description:

TRACER Cartridge. This cartridge is identified by a brown bullet tip.

Purpose:

This cartridge tracer is intended to permit visible observation of the bullets in-flight path or trajectory to the point of impact.

Tabulated Data:

DODAC	1305-A571
Weight	1732 grain
Length	5.45 inch
Tracer	R-256
Primer	Percussion
Fuze	NA
Explosive:	
Type	NA
Weight	NA
Incendiary:	
Type	NA
Weight	NA
Propellant:	
Type	IMR 5010
Weight	225 grain

Performance:

Chamber pressure	54,000 psi
Velocity	2860 fps, 78 ft from muzzle

Shipping and Storage Data:

Quantity-distance class/SCG	1.4C
Storage code	Class V
DOT shipping class	C
DOT designation	SMALL ARMS AMMUNITION
Drawing number	7672165

References:

TM 9-1005-213-10
TM 9-1005-231-10
TM 9-1300-206
SB 700-20

CARTRIDGE, CALIBER .50, BALL, PLASTIC PRACTICE, M858

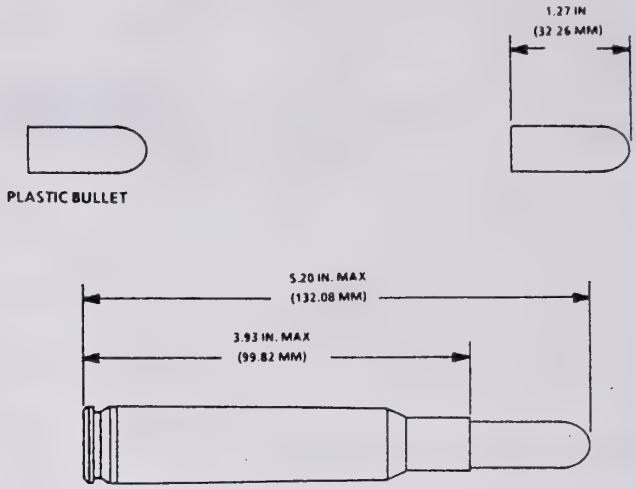

INTEGRATED PLASTIC BULLET AND CASE

Type Classification:

Std - 24 May 1983

Use:

Machine Guns, Caliber .50, with the M3 Recoil Amplifier.

Description:

BALL Cartridge. The cartridge is identified by the blue bullet and case which are molded into one piece with high density polyethylene plastic.

Purpose:

The cartridge is intended for scaled range training purposes.

Tabulated Data:

DODAC	1305-A603
Weight	460 grain
Length	5.20 inch
Tracer	NA
Primer	Percussion
Fuze	NA
Explosive:	
Type	NA
Weight	NA
Incendiary:	
Type	NA
Weight	NA
Propellant:	
Type	10B101
Weight	49 grain

Performance:

Chamber pressure	26,100 psi
Velocity	2790 fps, 78 ft from muzzle.
Maximum range	700 meters

Shipping and Storage Data:

Quantity-distance class/ SCG	1.4
Storage code	S
DOT shipping class	C
DOT designation	SMALL ARMS AMMUNITION
Drawing number	9340557

References:

TM 9-1005-213-10
TM 9-1005-231-10
TM 9-1300-206
SB 700-20

CARTRIDGE, CALIBER .50, TRACER, PLASTIC PRACTICE, M860

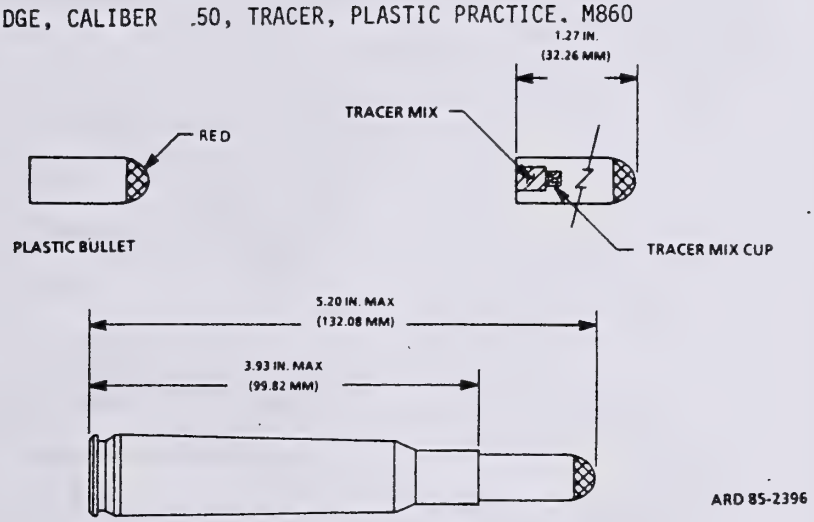

Type Classification:

Std - 24 May 1983

Use:

Machine Guns, Caliber .50, M2 with the M3 Recoil Amplifier.

Description:

TRACER Cartridge. This cartridge is identified by a red bullet tip and the blue color bullet and case which are molded into one piece with high density polyethylene plastic.

Purpose:

This cartridge tracer is intended for scaled range training purpose to permit visible observation of the bullets in-flight path or trajectory to the point of impact. This cartridge is intended for use with the M858 Ball Plastic Practice Cartridge.

Tabulated Data:

DODAC	1305-A595
Weight	460 grain
Length	5.20 inch
Tracer	DAG9591254/4
Primer	Percussion
Fuze	NA
Explosive:	
Type	NA
Weight	NA
Incendiary:	
Type	NA
Weight	NA
Propellant:	
Type	10B101
Weight	49 grain

Performance:

Chamber pressure	26,100 pst
Velocity	2790 fps, 78 ft from muzzle
Maximum range	700 meters
Trace	20-150 meters

Shipping and Storage Data:

Quantity-distance class/ SCG	1.4
Storage code	S
DOT shipping class	C
DOT designation	SMALL ARMS AMMUNITION
Drawing number	9340558

References:

TM 9-1005-213-10
TM 9-1005-231-10
TM 9-1300-206
SB 700-20

CARTRIDGE, 5.56-MM, BALL, M193

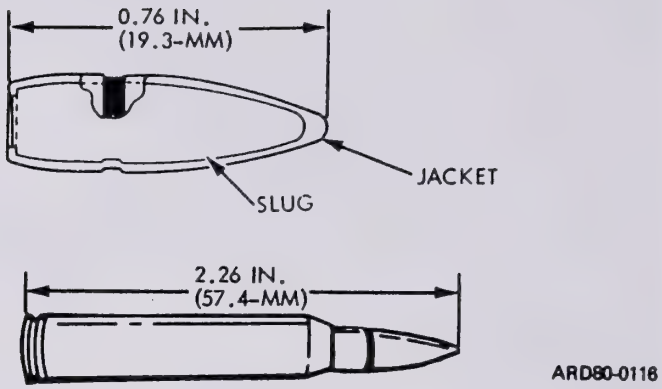

Type Classification:

Std - AMCTC 5143

Use:

Rifle, 5.56-MM, M16 and M16A1

Description:

BALL Cartridge. This cartridge is identified by a plain bullet tip.

Purpose:

The cartridge is intended for use against personnel and unarmored targets.

Tabulated Data:

DODAC	1305-A066
Weight	182 grain
Length	2.26 inch
Tracer	NA
Primer	Percussion
Fuze	NA
Explosive:	
Type	NA
Weight	NA
Incendiary:	
Type	NA
Weight	NA
Propellant:	
Type	WC 8[illegible] CM[illegible] 0
Weight	28.5 grai[illegible] or 26.5 grain
Projectile:	
Weight	56.0 grai[illegible]

Performance:

Chamber pressure	52,000 psi
Velocity	3250 fps, 15 ft from muzzle

Shipping and Storage Data:

Quantity-distance class/SCG	1.4S
Storage code	Class V
DOT shipping class	C
DOT designation	SMALL ARMS AMMUNITION
Drawing number	10523632

References:

TM 9-1005-249-10
TM 9-1300-206
SB 700-20

CARTRIDGE, 5.56MM, BALL, M855

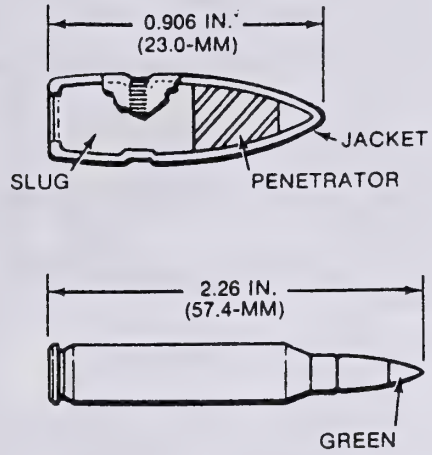

ARD 82-0332

Type Classification:

Std - MSR 05826003

Use:

Machine Gun, 5.56MM, M249E1 and Rifle 5.56MM, M16A2.

Description:

BALL Cartridge. This cartridge is identified by a green bullet tip.

Purpose:

The cartridge is intended for use against personnel and unarmored targets.

Tabulated Data:

DODAC	1305-A059
Weight	190 grain
Length	2.26 in.
Tracer	NA
Primer	Percussion
Fuze	NA
Explosive:	
Type	NA
Weight	NA
Incendiary:	
Type	NA
Weight	NA
Propellant:	
Type	WC 844
Weight	26.1 grain
Projectile:	
Weight	62.0 grain

Performance:

Chamber pressure	55,000 psi
Velocity	3025 fps, 78 ft from muzzle

Shipping and Storage Data:

Quantity-distance class/SCG	1.4S
Storage code	Class V
DOT shipping class	C
DOT designation	SMALL ARMS AMMUNITION
Drawing number	9342862

References:

TM 9-1305-201-20
TM 9-1300-206
DARCOM-P 700-3-2

CARTRIDGE, 5.56MM, GRENADE, M195

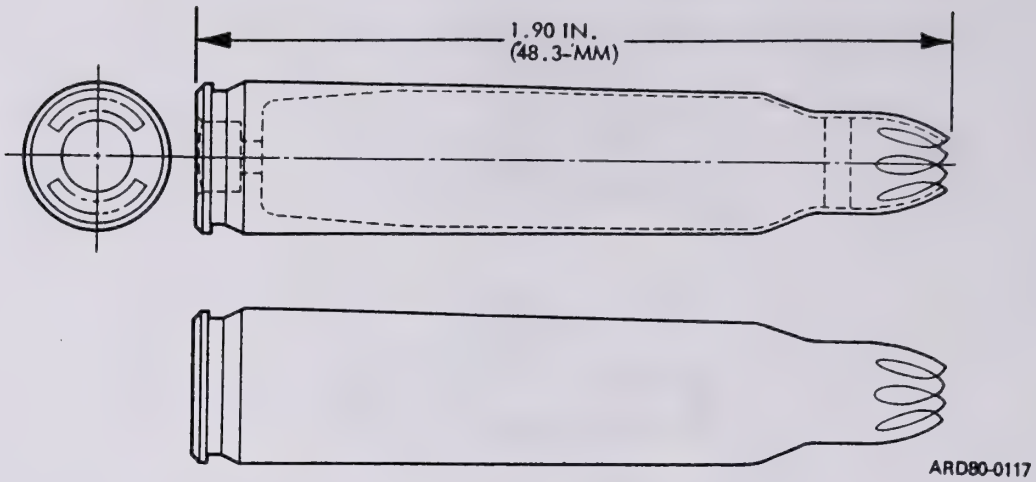

Type Classification:

Std - AMCTC 6919.

Use:

Rifle, 5.56MM, M16 and M16A1.

Description:

GRENADE Cartridge. This cartridge is identified by a rose-petal (rosette crimp) closure of the cartridge case mouth sealed with red lacquer.

Purpose:

The cartridge provides pressure, on functioning, to project grenades to a desired target using a grenade projection adapter.

Tabulated Data:

DODAC	1330-G841
Weight	126 grain
Length	1.90 inch
Tracer	NA
Primer	Percussion
Fuze	NA
Explosive:	
Type	NA
Weight	NA
Incendiary:	
Type	NA
Weight	NA
Propellant:	
Type	IMR 4475
Weight	25 grain

Performance:

Chamber pressure	NA
Velocity	140/165 fps, 5 ft 6 in. from muzzle for projected grenade

Shipping and Storage Data:

Quantity-distance class/SCG	1.4S
Storage code	Class V
DOT shipping class	C
DOT designation	SMALL ARMS AMMUNITION
Drawing number	10534926

References:

TM 9-1005-249-10
TM 9-1300-206
SB 700-20

CARTRIDGE, 5.56-MM, TRACER, M196

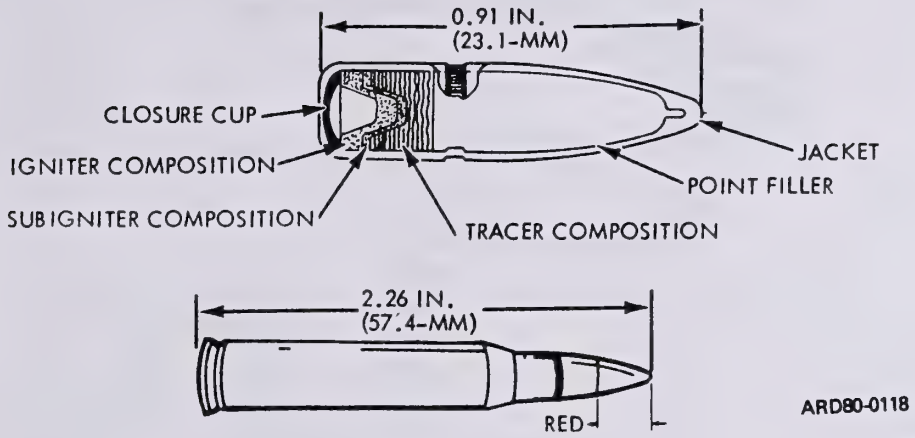

Type Classification:

Std - AMCTC 5055

Use:

Refle, 5.56-MM, M16 and M16A1.

Description:

TRACER Cartridge. This cartridge is identified by a red bullet tip.

Purpose:

The tracer is intended to permit visible observation of the bullets in-flight path or trajectory to the point of impact.

Tabulated Data:

DODAC	1305-A068
Weight	177 grain
Length	2.26 inch
Tracer	R-284
Primer	Percussion
Fuze	NA
Explosive:	
Type	NA
Weight	NA
Incendiary:	
Type	NA
Weight	NA
Propellant:	
Type	WC 844 or IMR 8208M
Weight	28.5 grain, 25.3 grain or CMR-170 26.5 grain
Projectile:	
Weight	54.0 grain

Performance:

Chamber pressure	52,000 psi
Velocity	3200 fps, 15 ft from muzzle

Shipping and Storage Data:

Quantity-distance class/SCG	1.4S
Storage code	Class V
DOT shipping class	C
DOT designation	SMALL ARMS AMMUNITION
Drawing number	10534193

References:

TM 9-1005-249-10
TM 9-1300-206
SB 700-20

CARTRIDGE, 5.56MM, TRACER, M856

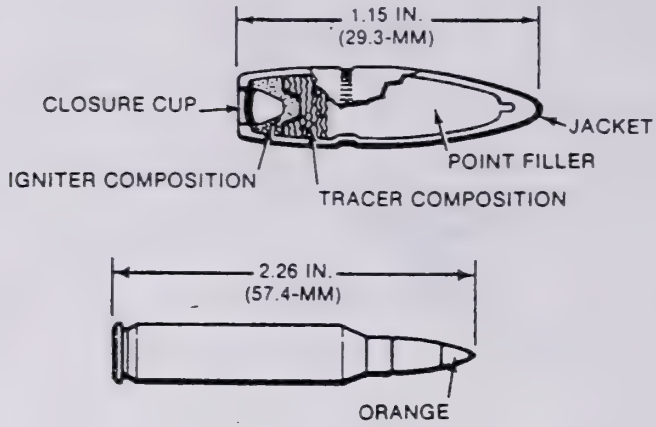

ARD 82-0333

Type Classification:

Std - MSR 05826002

Use:

Machine Gun, 5.56MM, M249E1 and Rifle, 5.56MM, M16A2.

Description:

TRACER Cartridge. This cartridge is identified by an orange bullet tip.

Purpose:

The tracer is intended to permit visible observation of the bullets in-flight path or trajectory to the point of impact.

Tabulated Data:

DODAC----------1305-A063
Weight----------191 grain
Length---------- 2.26 in.
Tracer----------NA
Primer---------- Percussion
Fuze---------- NA
Explosive:
Type----------NA
Weight---------- NA
Incendiary:
Type----------NA
Weight---------- NA
Propellant:
Type----------WC 844
Weight---------- 24.7 grain
Projectile:
Weight---------- 63.7 grain

Performance:

Chamber pressure----------55,000 psi
Velocity----------2870 fps, 78 ft from muzzle

Shipping and Storage Data:

Quantity-distance class/SCG---- 1.4S
Storage code----------Class V
DOT shipping class---------- C
DOT designation----------SMALL ARMS AMMUNITION
Drawing number---------- 9342863

References:

TM 9-1300-206
SB 700-20

CARTRIDGE, 5.56-MM, BLANK, M200

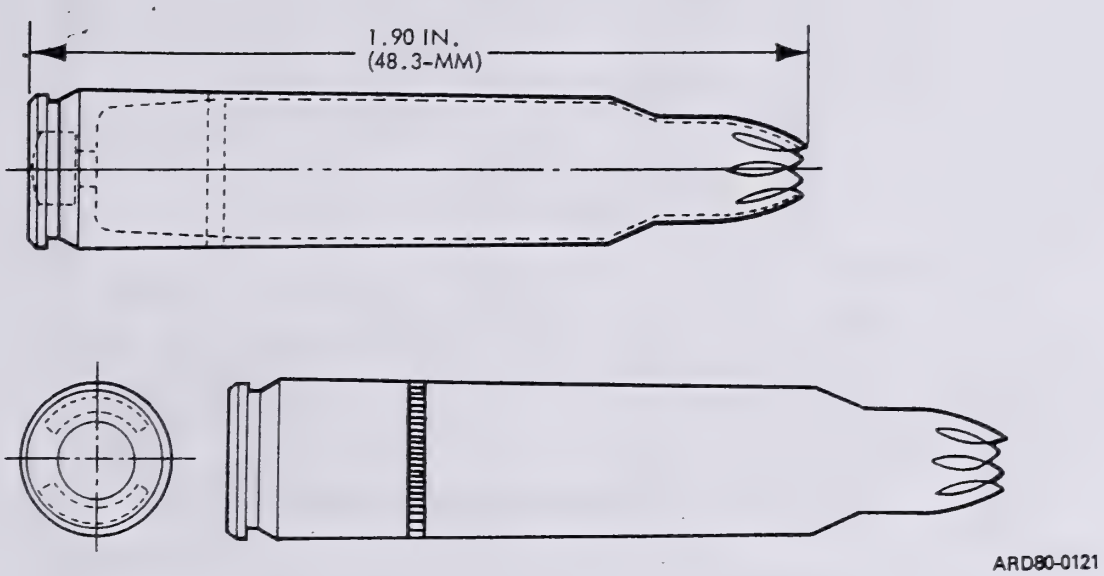

Type Classification:

Std - AMCTC 5942

Use:

Rifle, 5.56-MM, M16 and M16A1.

Description:

BLANK Cartridge. The cartridge is identified by a rose-petal (rosette crimp) closure of the cartridge case mouth. In addition, an engraved knurl is located 1/2 inch from the head of the cartridge case.

Purpose:

This cartridge is designed for simulated firing in training exercises and for saluting purposes.

Tabulated Data:

DODAC	1305-A080
Weight	107 grain
Length	1.90 inch
Tracer	NA
Primer	Percussion
Fuze	NA
Explosive:	
Type	NA
Weight	NA
Incendiary:	
Type	NA
Weight	NA
Propellant:	
Type	HPC 13
Weight	7 grain

Performance:

Chamber pressure	NA
Velocity	NA

Shipping and Storage Data:

Quantity-distance class/SCG	1.4S
Storage code	Class V
DOT shipping class	C
DOT designation	SMALL ARMS AMMUNITION
Drawing number	10542379

References:

TM 9-1005-249-10
TM 9-1300-206
SB 700-20

CARTRIDGE, 5.56MM: BLANK, M755

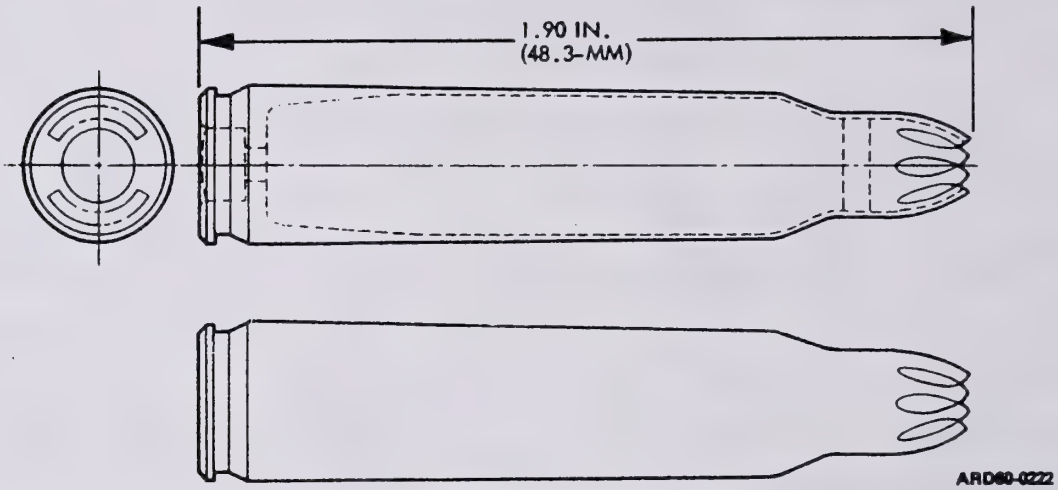

Type Classification:

Std. MSR 04786005

Use:

The M755 blank cartridge is especially designed for use with the Sting Ring Airfoil Munition System which consists of the M234 launcher and the 64mm Riot Control M743 Projectile fired from the M16A1 rifle.

Description:

The Cartridge, 5.56mm: Blank, M755 is only for use with the M234 riot control 64 millimeter projectile launcher. The launcher is attached to the flash suppressor of the M16A1 rifle and actuated by firing an M755, 5.56mm blank cartridge. The M755 blank cartridge is the only cartridge that will give the projectile M743 the proper velocity. Use of other blank cartridges may damage the system.

The cartridge is loaded with 12 grains of Dupont Hi Skor 700X propellant closed with a seven petal nose crimp and moisture sealed. The crimped tips of the cartridge is painted with yellow lacquer for identification and thus lessen the chance of mixing them with the standard M16A1 rifle blank cartridges.

CARTRIDGE, 5.56MM, PLASTIC, PRACTICE, M862

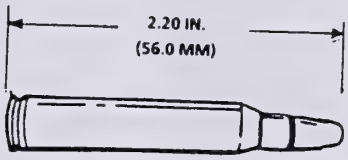

ARD 85-2397

Type Classification:

Std - MSR02846001

Use:

Rifle, 5.56MM, M16A1 W/XM2 Practice Bolt.

Description:

Practice Cartridge. This cartridge is identified by a blue bullet tip.

Purpose:

This training cartridge is for training in local and urban training areas where range restrictions preclude use of full range standard service ammunition.

Tabulated Data:

DODAC	1305-A065
Weight	118 grain
Length	2.20 inch
Tracer	NA
Primer	Percussion
Fuze	NA
Explosive:	
Type	NA
Weight	NA
Incendiary:	
Type	NA
Weight	NA
Propellant:	
Type	NC 688 PK2
Weight	8.5 grain
Projectile:	
Weight	46.0 grain

Performance:

Chamber pressure	25,000 psi
Velocity	5200 fps, 15 ft from muzzle

Shipping and Storage Data:

Quantity-distance class/ SCG	1.4S
Storage code	Class V
DOT shipping class	C
DOT designation	SMALL ARMS AMMUNITION
Drawing number	9341508

References:

TM 9-1005-249-10
TM 9-1300-206
SB 700-20

Purpose:

The blank cartridge is fed into the firing chamber. When fired the primer ignites the propellant. The expanding propellant gasses pass from the muzzle of the rifle into the launcher manifold. The projectile is ejected from the launcher barrel. The propellant charge is not sufficient to eject the cartridge case which must be ejected by pulling the charging handle of the rifle all the way back.

Tabulated Data:

NSN	Issued with Projectile, 64mm: Riot Control, M743
NSN	1310-01-015-6246
Weight	112 grains
Length	1.90 inch
Primer	Percussion

Propellant:

Type	Hi Skor 700 X
Weight	12 grains

Performance:

Chamber pressure	N/A
Muzzle Velocity	172 to 198 fps
Max Range	100 meters

Shipping and Storage Data:

Quantity-Distance Class/SCG	1.4S
Storage Code	Class I
DOT shipping class	C
DOT designation	SMALL ARMS AMMUNITION
Drawing number	C122-3-43
DODAC	To be assigned

CARTRIDGE, 7.62-MM, BALL, M59

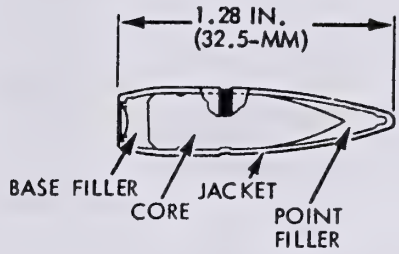

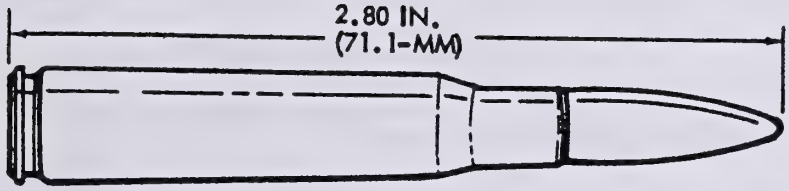

ARD80-0123

Type Classification:

Std - OTCM 36841

Use:

Machine Guns, 7.62-MM, M60 and M219; Rifle 7.62-MM, M14.

Description:

BALL Cartridge. The cartridge is identified by a plain bullet tip.

Purpose:

The cartridge is intended for use against personnel and unarmored targets.

Tabulated Data:

DODAC	1305-A143
Weight	393 grain
Length	2.80 inch
Tracer	NA
Primer	NA
Fuze	NA
Explosive:	
Type	NA
Weight	NA
Incendiary:	
Type	NA
Weight	NA
Propellant:	
Type	WC 846
Weight	46 grain
Projectile:	
Weight	150.5 grain

Performance:

Chamber pressure	50,000 psi
Velocity	2750 fps, 78 ft from muzzle

Shipping and Storage Data:

Quantity-distance class/SCG	1.4S
Storage code	Class V
DOT shipping class	C
DOT designation	SMALL ARMS AMMUNITION
Drawing number	7553702

References:

TM 9-1005-223-10
TM 9-1005-223-12P
TM 9-1005-224-10
TM 9-1005-233-10
TM 9-1005-257-12
TM 9-1005-262-14
TM 9-1005-298-12
TM 9-1005-313-10
TM 9-1300-206
SB 700-20

CARTRIDGE, 7.62-MM, HIGH PRESSURE TEST, M60

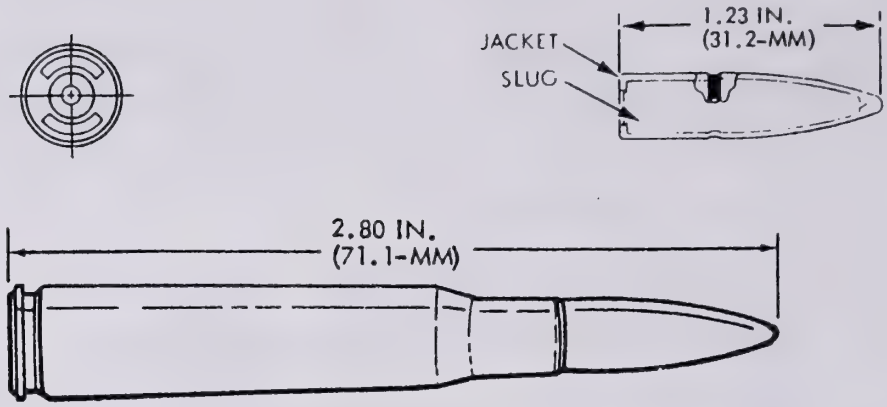

ARD80-0124

Type Classification:

OBS - MSR-11756003

Use:

All 7.62-MM Weapons.

Description:

HIGH PRESSURE TEST Cartridge. The cartridge is identified by a stannic-stained (silvered) case.

Purpose:

The cartridge is loaded with a special propellant to produce pressures substantially in excess of the service cartridge; the cartridge is not for field issue, but is used for proof firing of weapons during manufacture, test, or repair.

Tabulated Data:

DODAC	1305-A129
Weight	412 grain
Length	2.80 inch
Tracer	NA
Primer	Percussion
Fuze	NA
Explosive:	
Type	NA
Weight	NA
Incendiary:	
Type	NA
Weight	NA
Propellant:	
Type	IMR 4475
Weight	41 grain
Projectile:	
Weight	171.5 grain

Performance:

Chamber pressure	67,500 psi
Velocity	NA

Shipping and Storage Data:

Quantity-distance class/SCG	1.4S
Storage code	Class V
DOT shipping class	C
DOT designation	SMALL ARMS AMMUNITION
Drawing number	7553703

References:

TM 9-1005-223-10
TM 9-1005-223-12P
TM 9-1005-224-10
TM 9-1005-233-10
TM 9-1005-257-12
TM 9-1005-262-14
TM 9-1005-298-12
TM 9-1005-313-10
TM 9-1300-206
SB 700-20

CARTRIDGE, 7.62-MM, TRACER, M62

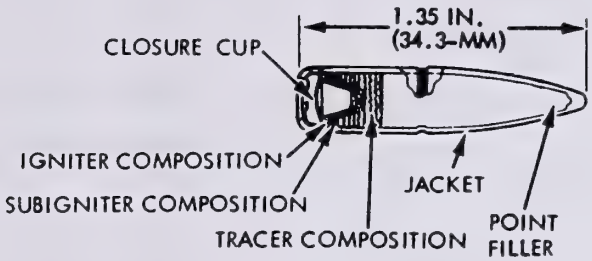

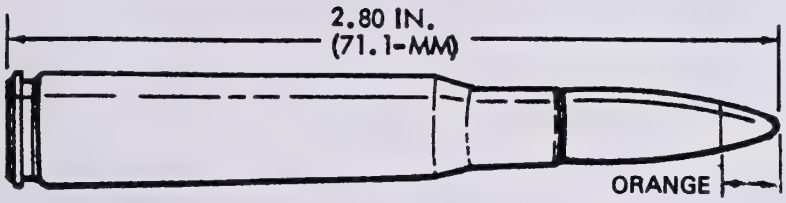

ARD80-0126

Type Classification:

CON - MSR 11756003

Use:

Machine Guns, 7.62-MM, M60, M219 and M240; Rifle, 7.62-MM, M14.

Description:

TRACER Cartridge. The cartridge is identified by an orange bullet tip.

Purpose:

The tracer is intended to permit visible observation of the bullets in-flight path or trajectory to the point of impact.

Tabulated Data:

DODAC	1305-A124
Weight	383 grain
Length	2.80 inch
Tracer	R-284
Primer	Percussion
Fuze	NA
Explosive:	
Type	NA
Weight	NA
Incendiary:	
Type	NA
Weight	NA
Propellant:	
Type	WC 846
Weight	46 grain
Projectile:	
Weight	142 grain

Performance:

Chamber pressure	50,000 psi
Velocity	2750 fps, 78 ft from muzzle

Shipping and Storage Data:

Quantity-distance class/SCG	1.4S
Storage code	Class V
DOT shipping class	C
DOT designation	SMALL ARMS AMMUNITION
Drawing number	10522000

References:

TM 9-1005-223-10
TM 9-1005-224-10
TM 9-1005-233-10
TM 9-1005-243-12
TM 9-1005-247-12
TM 9-1005-257-12
TM 9-1005-262-14
TM 9-1005-298-12
TM 9-1005-313-10
TM 9-1300-206
SB 700-20

CARTRIDGE, 7.62-IN., TRACER, M62 (OVERHEAD FIRE MISSION)

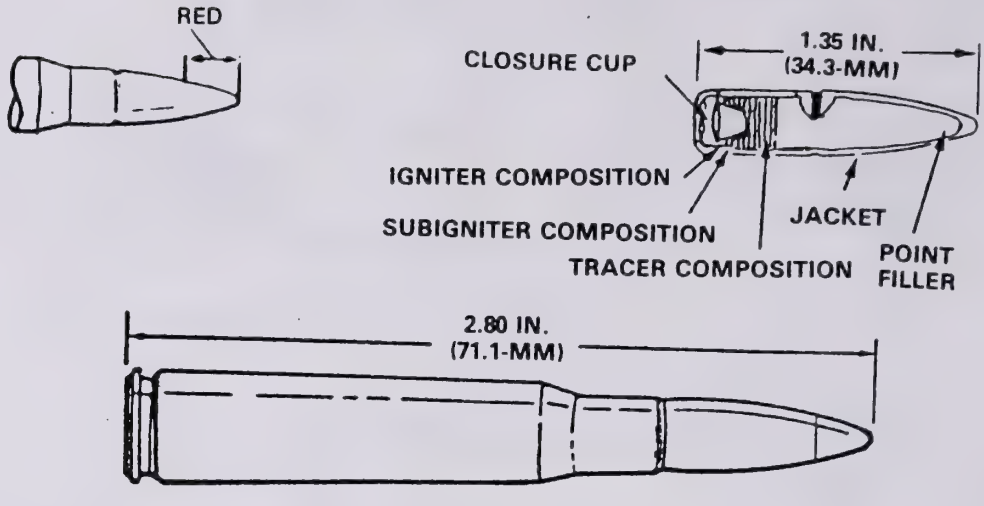

Type Classification:

CON - MSR 11756003

Use:

Machine Guns, 7.62-MM, M60, M219 and M240; Rifle, M14.

Description:

TRACER Cartridge. The cartridge is identified by a red bullet tip.

Purpose:

This cartridge is used in Weapons for firing over the heads of troops being trained in field exercises. Stringent production control and screening of ammunition lots ensure the safety of personnel operating immediately below the trajectory of the fired bullets.

Tabulated Data:

DODAC	1305-A167
Weight	387 grain
Length	2.80 inch
Tracer	R-284
Primer	Percussion
Fuze	NA
Explosive:	
Type	NA
Weight	NA
Incendiary:	
Type	NA
Weight	NA
Propellant:	
Type	WC 846
Weight	46 grain
Projectile:	
Weight	146.0 grain

Performance:

Chamber pressure	50,000 psi
Velocity	2750 fps, 78 ft from muzzle

Shipping and Storage Data:

Quantity-distance class/SCG	1.4S
Storage code	Class V
DOT shipping class	C
DOT designation	SMALL ARMS AMMUNITION
Drawing number	10535493

References:

TM 9-1005-223-10
TM 9-1005-224-10
TM 9-1005-233-10
TM 9-1005-247-12
TM 9-1005-257-12
TM 9-1005-262-14
TM 9-1005-298-12
TM 9-1005-313-20
TM 9-1300-206
SB 700-20

DUMMY CARTRIDGE, 7.62-MM, M63

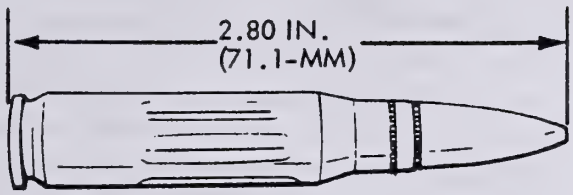

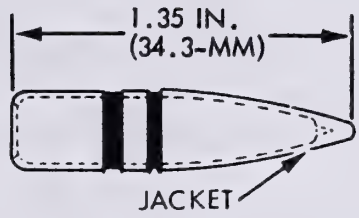

ARD80-0128

Type Classification:

Std - OTCM 36841

Use:

Machine Guns, 7.62-MM, M60, M219 and M240; Rifle, 7.62-MM, M14.

Description:

DUMMY Cartridge. The cartridge is identified by six longitudinal corrugations (flutings) on the cartridge case. In addition, there is no primer, and no vent hole in the primer pocket.

Purpose:

This is a dummy cartridge used for practice in loading 7.62-MM weapons for simulated firing to detect flinching of personnel during firing and for inspecting and testing the weapon mechanism.

Tabulated Data:

DODAC	1305-A135
Weight	258 grain
Length	2.80 inch
Tracer	NA
Primer	NA
Fuze	NA
Explosive:	
Type	NA
Weight	NA
Incendiary:	
Type	NA
Weight	NA

Performance:

Chamber pressure	NA
Velocity	NA

Shipping and Storage Data:

Quantity-distance class/SCG	NA
Storage code	NA
DOT shipping class	NA
DOT designation	Non-explosive AMMUNITION
Drawing number	7553706

References:

TM 9-1005-223-10
TM 9-1005-223-12P
TM 9-1005-224-10
TM 9-1005-233-10
TM 9-1005-243-12
TM 9-1005-247-12
TM 9-1005-257-12
TM 9-1005-262-14
TM 9-1005-298-12
TM 9-1005-313-10
TM 9-1300-206
SB 700-20

CARTRIDGE, 7.62MM, GRENADE, M64

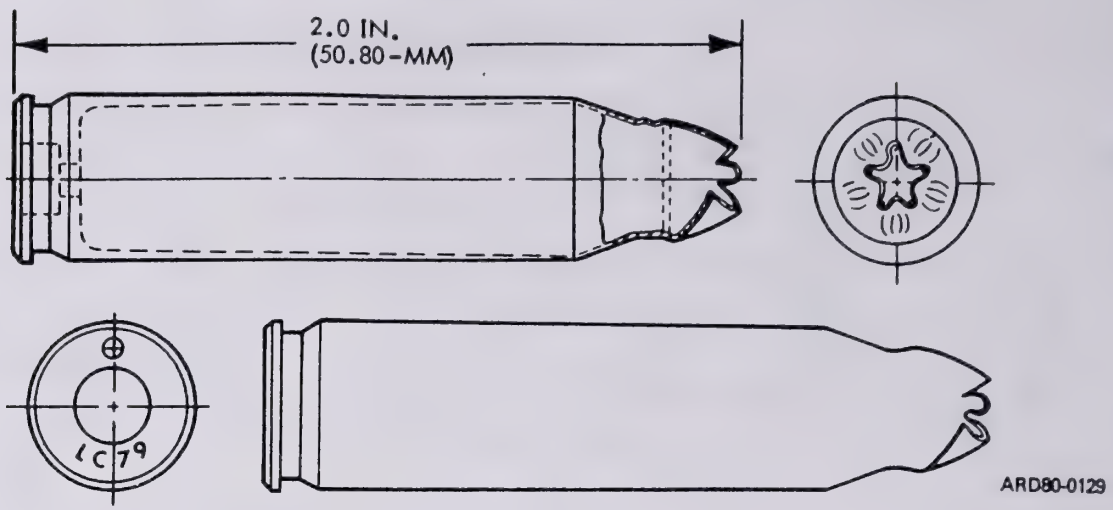

Type Classification:

OBS - MSR 11756003

Use:

Rifle, 7.62MM, M14.

Description:

GRENADE Cartridge. The cartridge is identified by a rose-petal (rosette crimp) closure of the cartridge case mouth and sealed with red lacquer.

Purpose:

This cartridge provides pressure to project rifle grenade to a desired target when using a grenade projection adapter and Dragon missile launch effect trainer (LET).

Tabulated Data:

DODAC	1305-G839
Weight	295 grain
Length	2.0 inch
Tracer	NA
Primer	Percussion
Fuze	NA
Explosive:	
Type	NA
Weight	NA
Incendiary:	
Type	NA
Weight	NA
Propellant:	
Type	WC 830
Weight	45 grain

Performance:

Chamber pressure	NA
Velocity	160 fps, 5.6 ft from muzzle for projected grenade

Shipping and Storage Data:

Quantity-distance class/SCG	1.4S
Storage code	Class V
DOT shipping class	C
DOT designation	SMALL ARMS AMMUNITION
Drawing number	7553707

References:

TM 9-1300-206
SB 700-20

diameter. Three grains are placed in each of the four sections formed by the spacer plates. Each lot of propellant is adjusted at the time of manufacture to give standard velocity. The igniter ignites the propellant.

e. The igniter consists of a short, cylindrical plastic case containing a small black powder charge and an electrical squib. It is assembled in the forward end of the motor on top of the propellant spacer plates. The leads of the electrical squib, running parallel to the grains of propellant, pass from the igniter through the nozzle into the expansion cone. A green lead (ground) wire is connected to the aluminum support ring of the contact ring assembly. A red lead (positive) wire is attached to a pin which is insulated from the support ring, but is in contact with the copper contact band. These connections are positioned 180° apart. Blue lead is used for test purpose only.

f. The fin assembly consists of six aluminum alloy fins and a contact ring assembly. The contact ring assembly, which encircles the fins, consists of three rings. An aluminum support ring, which is innermost, is separated from the copper contact ring by a plastic insulating ring. The fins are spot welded to the expansion cone; the expansion cone is press-fitted to the rear of the motor tube.

Differences between Models:

a. The M29A1 and M29A2 rockets are similar in appearance to the M28A2. The M29 series differ in that they have a crimping groove at the juncture of the warhead body and ogive. The rockets of an early manufacture are assembled with M28A2 rocket warhead metal parts inert loaded with plaster of paris.

b. The M29A1 warhead differs from the M29A2 warhead in the head and trap and spacer assembly. The ogive is attached to the head body of four screws staked to the ogive. Some rockets may have the cast trap and square spacer blades.

The warhead being inert, no functions occur when the rocket is fired. The rocket is strictly for training purpose.

Tabulated Data:

Rocket:	
Model	M29A2
Type	Practice
Diameter	3.5 in.
Length (max)	23.6 in.
Weight (approx)	9.00 lb
Performance:	
Operating temperature limits	-20° to +120°F (-28.6 to +48.4°C)
Muzzle velocity (at 70°F, approx)	334 fps (101.9 mps)
Range (max, approx)	945 yd (863.7 m)
Warhead:	
Type	Inert
Body	Cast iron
Color	Blue w/white markings
Diameter	3.5 in.
Length	10.5 in.
Weight	4.47 lb
Fuze:	
Model	M405A2
Type	Dummy
Diameter	2.0 in.
Length:	
Overall	3.42 in.
To shoulder (max)	2.94 in.
Weight	1.01 lb

Motor:
- Diameter (at fins) ------- 3.5 in.
- Length ------ 10.41 in.
- Weight ------ 3.30 lb
- Thrust ------ 6,000 to 10,000 lbs

Propellant initiating train:
- Igniter:
  - Model------ M20A1
  - Charge (black powder) ---- 0.125 ± 0.007 oz (3.54 ± .2 g)
  - Electrical squib ------ M2

Propelling charge:
- Propellant:
  - Model ----- M7
  - Type ------ Solvent
  - Configuration- Monoperforated, cylindrical extruded grains (12)
  - Weight (new type) ------ 0.44 lb (200 g)
  - Burning time:
    - At -20°F --- 0.05 sec
    - At +120°F -- 0.02 sec

Launchers:
- M29A2 ------ M20, M20A1, M20A1B1, M20B1
- M29A1 ------ M20, M20B1

Packing ------- 1 per metal/fiber container; 3 containers per wooden box

Box:
- Weight (with contents) ---- 53.0 lb
- Dimensions:
  - W/metal container --- 29-9/16 in. x 14-1/16 in. x 6-19/32 in.
  - W/fiber container --- 29-3/16 in. x 13-7/8 in. x 6-19/32 in.

Cube:
- W/metal container ---- 1.6 ft^3
- W/fiber container ---- 1.5 ft^3

Shipping and storage data:
- Storage class/SCG ------- 1.2C (12)
- DOT shipping class ------- B
- DOT designation --- ROCKET AMMUNITION WITH EMPTY PROJECTILES
- Field storage-- Group C

DODAC ------- 1340-H601

Drawings:
- Complete assy - 82-6-23
- Loading assy -- 82-6-23
- Fuze ------- Dummy 72-5-16
- Packing (inner)- 7549038
- Packing (outer)- 7549040

References:
- TM 9-1340-222-20
- TM 9-1340-222-34

LIGHT ANTITANK WEAPON (LAW) SYSTEM M72 SERIES

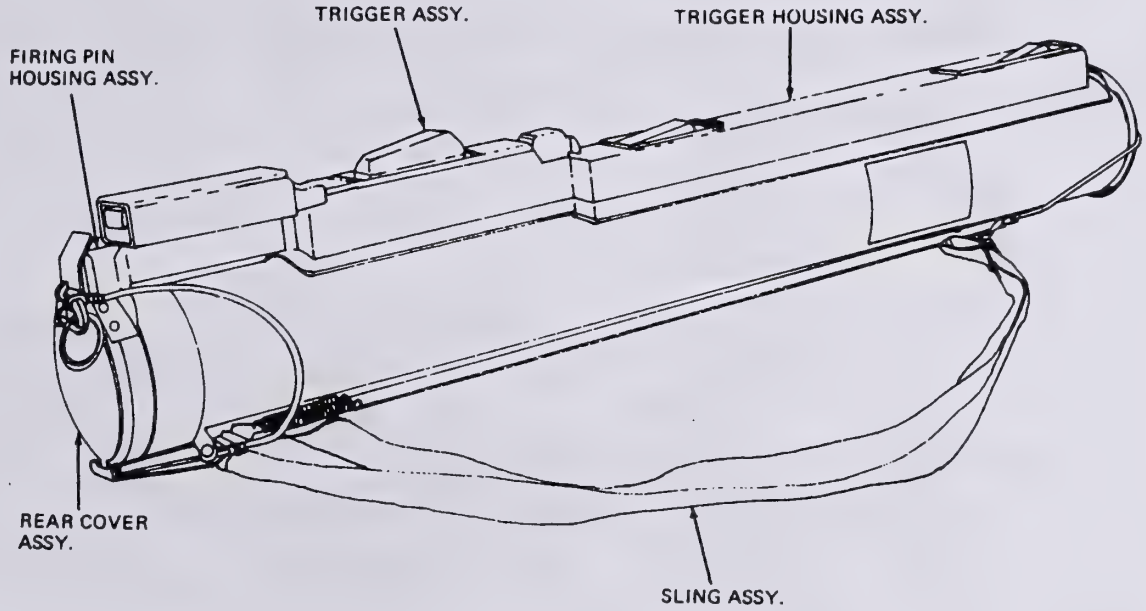

ARD80-0504A

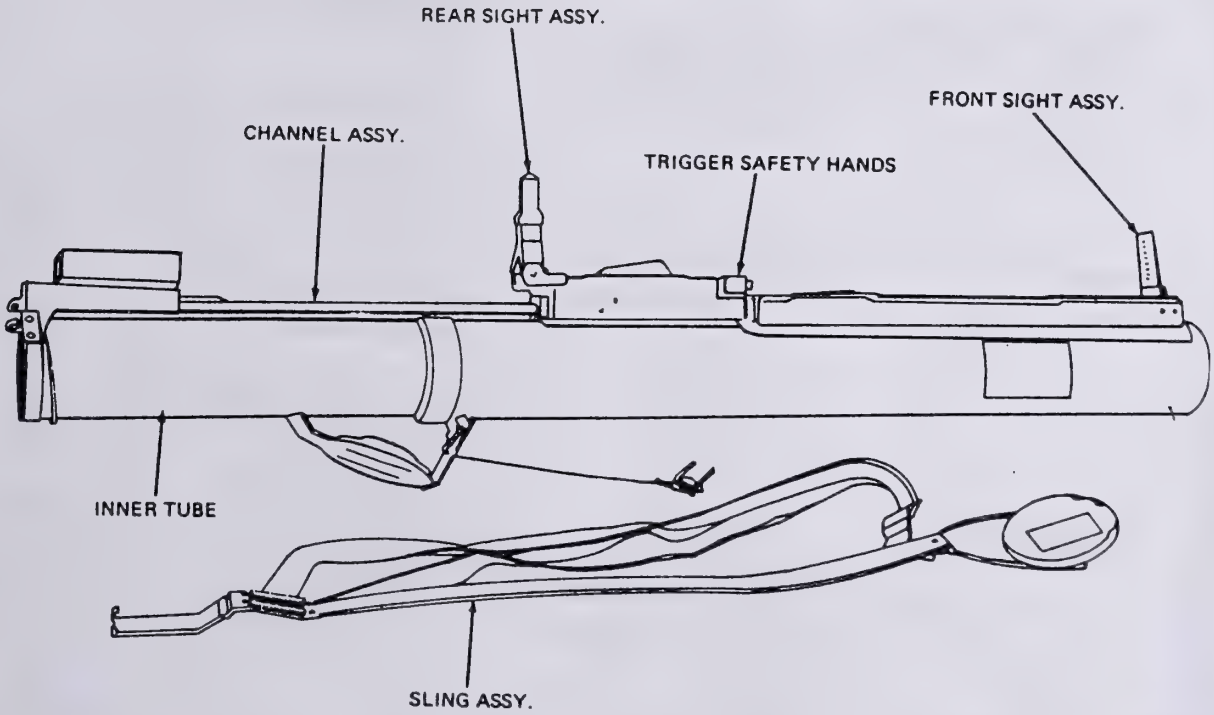

ARD80-0504B

ROCKET, HEAT, 66MM, M72, M72A1, M72A2, AND M72A3

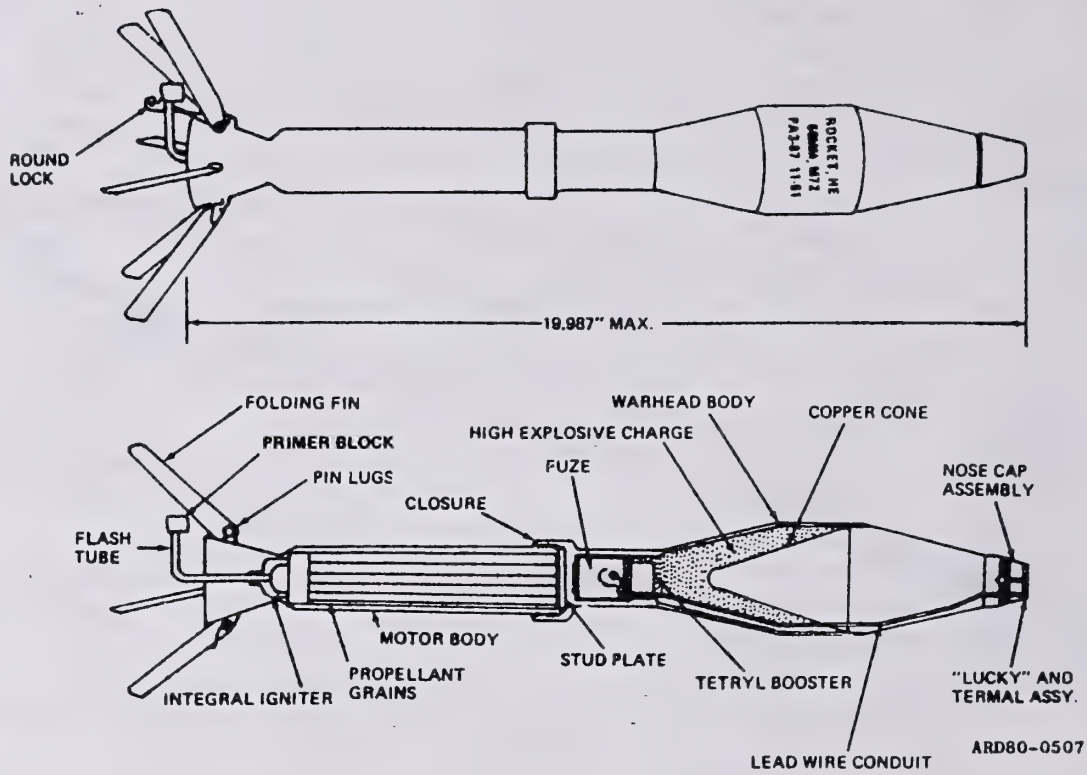

Type Classification:

M72 & M72A1 OBS-MSR-05806019.
M72A2 - STD LCC-B-MSR-09806022.
M72A3-STD LCC-A-MSR-09806021.

Use:

Primarily for penetration of armored targets. It may be used effectively against bunkers and other light field of fortifications.

a. Launcher.

b. Rocket.

Description:

a. The packaged compact portable weapon is issued as a single shot shoulder-fired launcher with a HEAT rocket and sling assembly. The rocket launcher is a tubular, telescoping, smooth-bore, open-breech type weapon. The outer (front) tube is made of plastic, impregnated fiberglass; the inner (rear tube) is made of aluminum. The inner tube is oriented with respect to the outer tube by the channel assembly, which rides in an alinement slot in the trigger housing assembly. The tubes are locked in the open position when the detent assembly drops into the rectangular hole in the trigger housing assembly.

b. The fin stabilized rocket in this system contains a shaped charge warhead with a point initiating base detonating (PIBD) fuze. The fuze contains a 2-wire system from the piezo electric element on the warhead to the fuze detonator which provides electrical fuze initiation when the nose crystal is struck. In addition, the fuze has a mechanical inertial graze element as a secondary means of functioning

Differences between Models:

The M72A2 rocket is similar to the M72A1 with the exception of the warhead which contains a precision shaped charge liner cone. This provides greater target penetration than the M72A1. There is also a minor change in the wiring between the piezo electric element and fuze, otherwise the two systems are identical. The M72A3 is similar to M72A2.

WARNING

Wear ear plugs when firing the weapon. The 100 and 150 meter markings on the front sight are coated with radioactive material, then laminated between two sheets of plastic. If sight is broken, remove and place in a plastic sealed bag. Return bag to ammunition disposal personnel.

Functioning:

a. Extending the launcher into the extended or firing position automatically locks the weapon.

b. After the trigger safety handle is released, the trigger is depressed. This releases the channel assembly which drives the firing pin into the primer of the rocket motor igniter. This ignites the black powder in the flash tube, which in turn, ignites the integral igniter of the rocket motor. The igniter initiates the propellant. The burning propellant propels the rocket from the launcher.

c. Upon target impact, the fuze train detonates the charge which collapses the copper liner into a finger shaped jet. The jet is preceded by extremely hot, high velocity gases which melt a hole in the target. The copper jet then penetrates into the target. Almost simultaneously the body and ogive are blasted into small fragments by the detonated octol charge. These fragments travel adjacent to, and aft of the line of fire.

Tabulated Data:

LAW systems (packaged):	
Models -----	M72A2
Weight -----	4.7 lb
Length:	
Closed position ---	25.77 in.
Extended position ---	35.16 in.
Launcher ---	M72
Weight ----	2.50 lb
Rocket -----	M72
Warhead ---	M18A1
Fuze -----	M412A1
Motor ----	M54
Warheads:	
Weight (loaded and fuzed) ---	2.3 lb
Explosive charge:	
Type ------	60/40 octol
Weight -----	0.67 lb (304 g)
Body material-	Steel w/aluminum ogive
Color -----	Black w/yellow markings
Fuzes (integral):	
Type ------	Point-initiating, base detonating
Weight -----	0.154 lb
Overall length (max) ------	1.89 in.
Diameter (max) ------	1.28 in.
Explosive booster:	
Type -----	Composition A5 (tetryl)
Weight ----	0.20 oz (5.6 g)
Arming distance ----	25 - 45 ft (7.6-13.7m)

Motor:

Weight -----	0.67 lb
Propellant:	
Model ----	M7
Type -----	Double base
Weight ----	0.138 lb (62.7 g)
Configuration ------	Stick
Number ---	19
Velocity ----	475 fps (145 mps)
Thrust at 70°F ------	4250 lb
Burning time -	7 to 15 milliseconds
Temperature limits -----	-40° to +140°F (-39.6° to 59.4°C)
Packing of rocket in launcher ---	5 per carton; 1 carton per barrier bag; 3 barrier bags per wooden box

Packing box:

Weight w/contents --	117.7 lb
Dimensions --	33-1/2 in. x 31-1/8 in. x 13-3/4 in.
Cube ------	8.3 ft^3

Shipping and storage data:

Storage class/ SCG -------	1.1E
DOT shipping class ------	A
DOT designation --	ROCKET AMMUNITION WITH EXPLOSIVE PROJECTILE
Field storage -	Group E
*DODAC ----	1340-H553, 1340-H554, 1340-H555, 1340-H557 and 1340-H568

Drawings:

Complete assembly ---	10048503-M72 9210276-M72A1 9244054-M72A2
Loading ----	9235663
Packing (inner) -	9227925
Packing (outer) -	9227926

References:

SC 1340/98-IL	TM 9-1340-214-10
TM 9-1340-222-20	
TM 9-1340-222-34	FM 23-33

*See appropriate supply catalog for individual NSN's pertaining to this (these) DODAC(s).

CHAPTER 3

AIRCRAFT ROCKETS
2.75-Inch

Complete Rounds:

a. Complete rounds can be assembled in the combinations in table 3-1. They may be fired from the M157, M158, M159C, M3 or M200 2.75-Inch Aircraft Rocket Launchers.

b. The rockets can be issued unassembled. This chapter contains information pertaining to the components of the unassembled rockets.

Table 3-1. 2.75-Inch Complete Round Rocket Combinations

DODAC	Warhead	Motor	Fuze
1340-H459	Flechette (ANTIPERSONNEL) WDU/4A/A	Mk40, Mod 3	Integral
	High Explosive M151		
1340-H470		Mk4, Mods	M427
1340-H471		Mk40, Mod 3	M433
1340-H489		Mk40, Mod 3	M429
1340-H490		Mk40, Mod 3	M423
1340-H161		Mk40, Mod 3	M423
1340-H485		Mk4, Mod 10	M427
	High Explosive M229		
1340-H488		Mk40, Mod 3	M429
1340-H533		Mk40, Mod 3	M427
1340-H534		Mk40, Mod 3	M423
1340-H160		Mk40, Mod 3	M423
1340-H469		Mk40, Mod 3	M433
	Smoke, WP, M156		
1340-H519		Mk40, Mod 3	M423
1340-H486		Mk 4, Mod 10	M427
1340-H593		Mk40, Mod 13	M427
1340-H826	HE, DP	Mk40, Mod 3	M438 M247
1340-H828	Practice, WTU-1/B	Mk40, and Mods	None
1340-H180	Illuminating M257	Mk40	M442
1340-H116	Smoke, Screening WP, M259	Mk40, Mod 3	M446

TYPICAL 2.75-INCH AIRCRAFT ROCKET (LSFFAR)

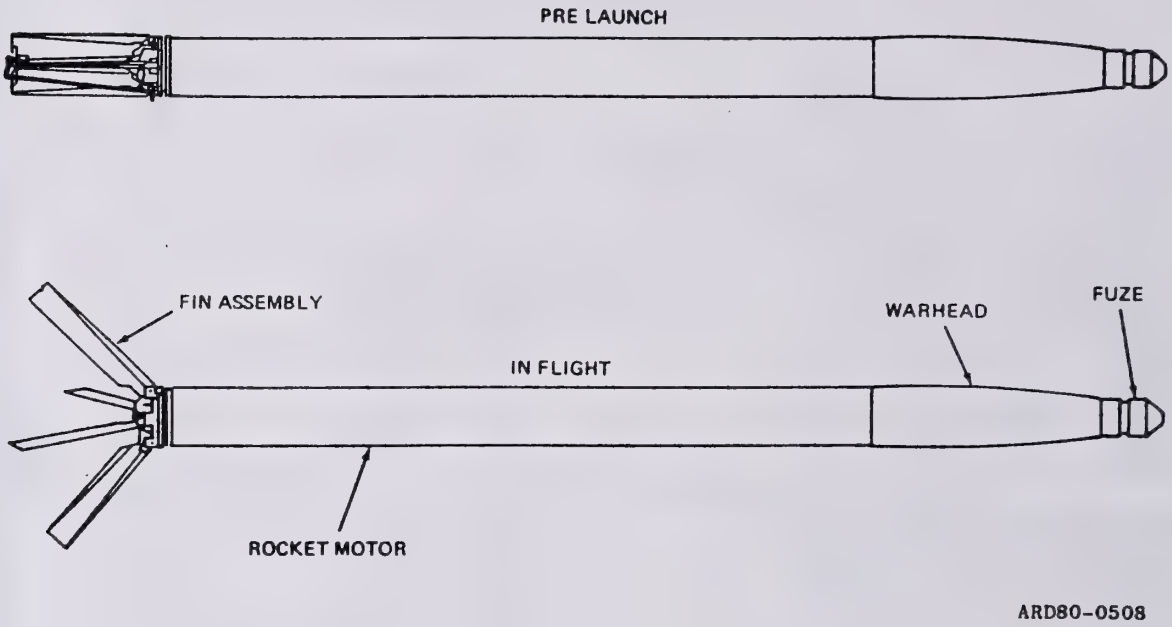

ROCKET, FLECHETTE, 2.75-INCH, WDU-4A/A

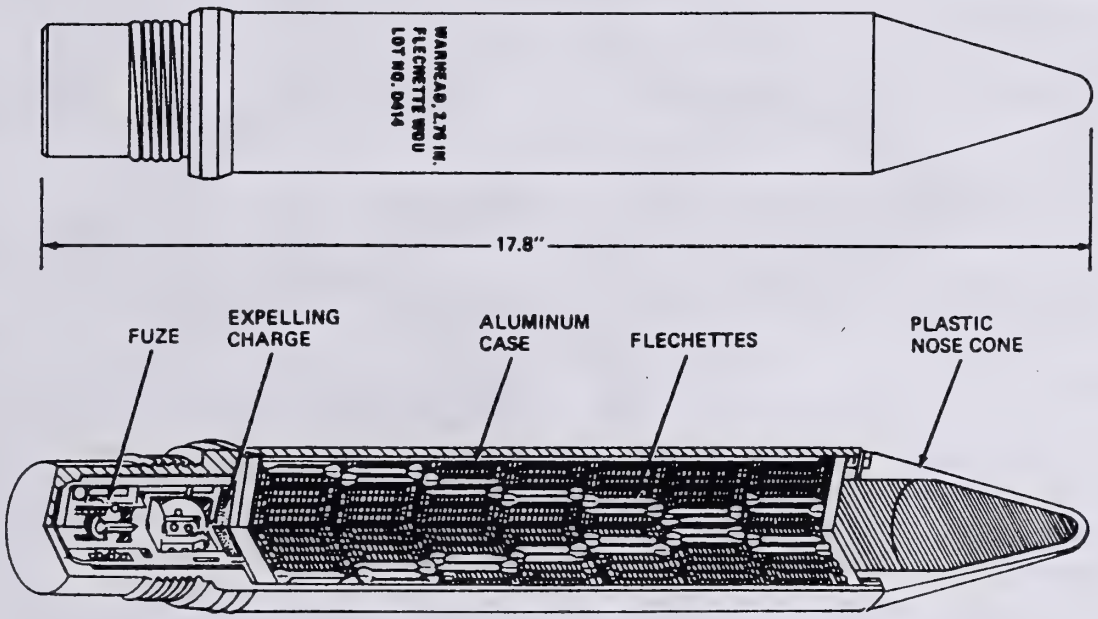

ARD80-0509

Type Classification:

STD (LCC-A) AMCTCM 47560 Nov 69

Use:

The warhead contains flechettes and is used against personnel.

Description:

a. The complete round consists of a warhead with an integral fuze and rocket motor.

b. The warhead consists of 3 main parts: a nose section, a body, and an integral fuze. The nose section, a plastic cone bonded to a metal plate, is attached to the body by shear pins. The body is a hollow cylinder loaded with 20 grain flechettes. The most recently manufactured WDU-4A/A warheads contain three tracers for the purpose of assisting the pilot/gunner in identifying the beaten zone of the flechette impact pattern. Two semicylindrical sleeves retain the flechettes in place. A metal pusher plate is located just aft of the flechettes. The threaded end of the body is machined internally to accommodate a base-detonating (BD) fuze.

c. The low-spin folding-fin aircraft rocket (LSFFAR) is an air-to-ground rocket primarily deployed from rotary-wing and other low-speed aircraft. However, it is also used on Air Force and Navy jet aircraft in ripple fire and in a restricted single fire mode.

d. The rocket motor is described in Chapter 5.

Differences between Models:

The Mk 40 Mods 1 and 3 have integral bulkhead motor tubes whereas the Mk 40 Mod 0 has nonintegral bulkhead tube. The igniter of the Mod 3 motor differs from that of the Mods 0 and 1 motors in that the igniter has been modified to incorporate a carried, frangible case in lieu of the blowout plug. Also, the squib is located on the periphery instead of the center of the case.

Functioning:

a. The rocket motor functions when current passes through the launcher firing contact to the igniter in the rocket motor. This current generates the heat necessary to initiate the igniter charge which ignites the propellant grain. Combustion gases from the burning propellant pressurizes the chamber and exhaust through the nozzle, providing the unequal forces required for rocket thrust.

b. Functioning of the fuze sets off an expelling charge which forces the pusher plate, flechettes and semicylindrical sleeves forward. This shears the pins attaching the nose cone to the body and expels the flechettes into the slipstream ahead of the rocket.

Tabulated Data:

Type	Antipersonnel
Weight (fuzed)	9.3 lb
Length	17.8 in.
Filler:	
Type	20-grain flechettes
Number	2200
Weight	6.3 lb
Body material	Extruded aluminum
Fuze	Integral
Type	Base detonating
Length	3.30 in.
Diameter	2.55 in.
Sensitivity	15 G's or less
Arming distance	(47-100 yd) (43 - 92 m)
Setback to arm	28 G's approx
Color	Olive drab w/white markings
Temperature limits:	
Firing	-40° to +140°F (-39.6° to +59.4°C)
Storage	-40° to +140°F (-39.6° to +59.4°C)
Drawing number	D67D9700
Packaging for complete round	1 rocket consisting of warhead, WDU-4A/A and rocket motor Mk 40, 3 per fiber container; 4 containers per wooden box
Packing box:	
Weight (w/ contents	162 lb
Dimensions	62-13/16 in. x 8-11/16 in. x 9-1/2 in. cm)
Cube	3.5 ft^3
Shipping and storage data:	
Storage class/ SCG	1.2C (12)
DOT shipping class	B
DOT designation	ROCKET AMMUNITION WITH INERT LOADED PROJECTILE
Field storage	Group F
DODAC for complete round	1340-H459

GRENADE, GENERAL PURPOSE, HE: M73
MULTIPURPOSE SUBMUNITION (MPSM), HIGH EXPLOSIVE

M73 SUBMUNITION

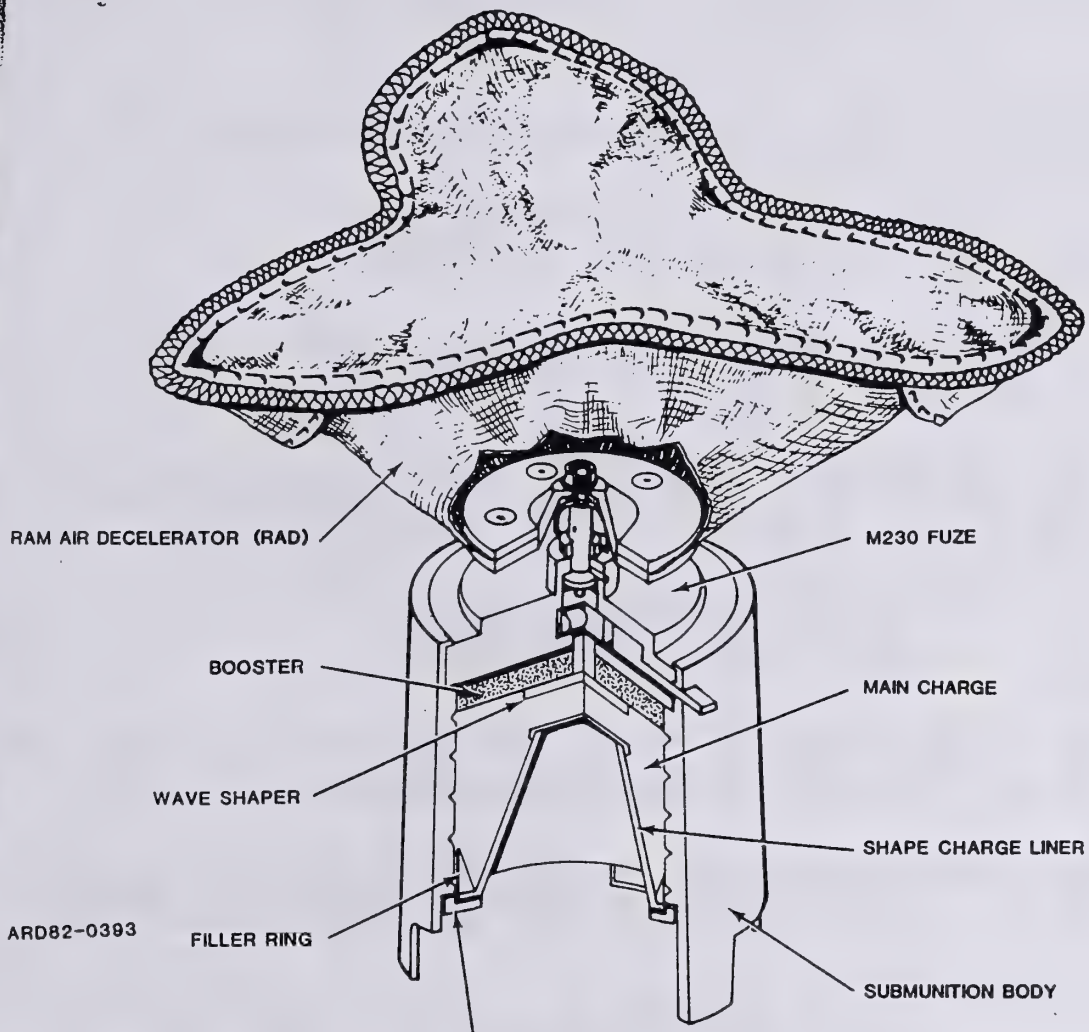

Type Classification:

STD (LCC-A).

Use:

The M261 warhead contains 9 each MPSM's M73 for use against personnel, materiel, and light armor.

Description:

The submunition grenade consists of a full caliber, cylindrical tapered steel casing, prescored internally for controlled fragmentation, a Ram Air Decelerator (RAD) device for orientation and stabilization, a truncated shaped charge liner, wave shaper and the M230 omni-directional fuze with explosive train. The kill mechanism is a truncated subcaliber, 44° included angle, shaped charge copper liner 33.02mm (1.3 in.) high. The submunition detonation is initiated by the M230 fuze which is armed by the action of the Ram Air Decelerator on ejection from the warhead.

Functioning:

When the warhead fuze functions, the expulsion charge is initiated and, by means of a pusher plate, presses the submunitions forward until the nose cone retaining pins are sheared and the submunitions are expelled into the airstream.

The RAD high drag device inflates and turns the submunition forward and toward the ground. The shock of inflation by Ram air forced through holes in the air-scoops in the RAD exerts a strong drag on the arming stem in the M230 fuze, in excess of 20 pounds, which breaks the safety shear wire. The fuze arming stem retracts approximately 0.125 inch and the arming pin at the base of the stem is withdrawn from the slider. The slider is then driven across the runaway escapement delay mechanism by its spring to bring the detonator into line with the firing pin. The fuze is now fully armed. If the submunition should be subjected to an impact force applied in any direction (as striking the ground or a vehicle), the sensing mass will move and release the locking ball holding back the spring loaded firing pin. The firing pin is driven forward and initiates the M55 stab detonator. The detonator sets off, in sequence, the explosive lead, the booster charge, and the high explosive main charge. The shaped charge lines penetrates light armor or other material in line with its axis and the submunition body shatters into small, high velocity fragments to defeat soft targets.

Tabulated Data:

Nomenclature: Grenade, General Purpose: M73

Length, fuzed with folded RAD (approx)	4 in.
Diameter (max)	2.55 in.
Material, steel, thickness	0.125 in.
Weight, loaded	1.2 lb
Explosive charge, Comp B, net	0.2 lb (90 g)
Detonator, M55, and PBX-N5 lead, charge	175 mg
Booster LX14	0.031 lb (14 g)
Cone, material	Copper
Diameter	50.8 mm (2 in.)
Height (truncated)	33.02 mm (1.3 in.)
Angle, included	44°
Standoff	19.3 mm (.76 in.)
Wave shaper material	Lead
Fragments:	
Weight	10 gr
Shape: platelet	2.54 x 6.15 x 6.15 mm
Total number (approx)	195
Fuze:	M230
Weight (approx)	0.25 lb
Drawing No.	9333825
Grenade Drawing No.	9334143

Comparison of HE and Practice Grenades

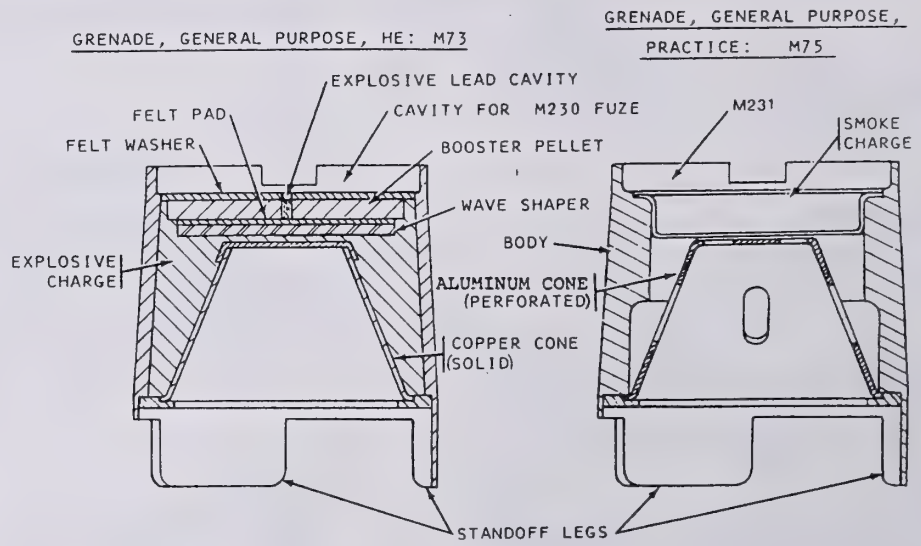

STANDOFF SKIRT IS CUT OUT TO MAKE THREE 60° LEGS.

NOTE: EACH CORNER OF THE TRI-CORNER RAD IS ORIENTED OVER A LEG CENTERLINE FOR FLIGHT STABILITY.

ARD80-0177A

TM 43-0001-28

TECHNICAL MANUAL

ARMY AMMUNITION DATA SHEETS

ARTILLERY AMMUNITION GUNS, HOWITZERS, MORTARS, RECOILLESS RIFLES, GRENADE LAUNCHERS, AND ARTILLERY FUZES (Federal Supply Class 1310, 1315, 1320, 1390)

This copy is a reprint which includes current pages from Changes 1 THROUGH 16.

HEADQUARTERS, DEPARTMENT OF THE ARMY

APRIL 1977

C.875

CARTRIDGE, 81 MILLIMETER: TARGET PRACTICE M879 WITH FUZE, PD, M751

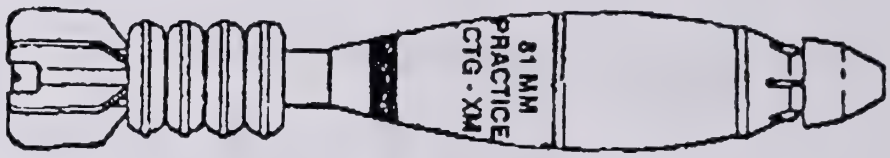

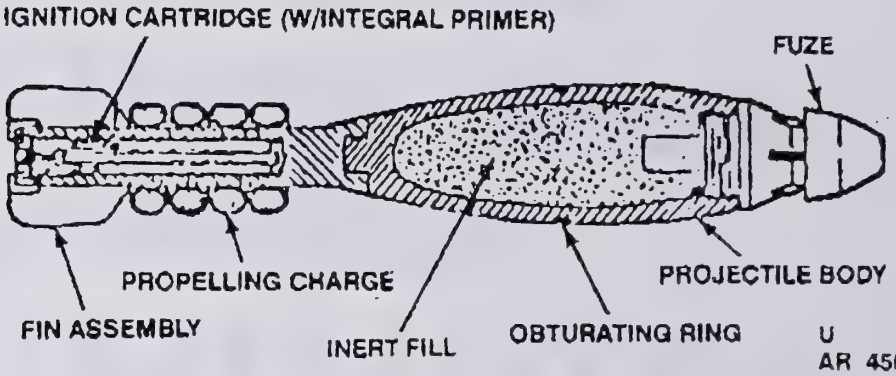

U
AR 4501

Type Classification:

TBD

Use:

This cartridge is a full range training round for use in the M252 improved 81mm mortar system.

Description:

This cartridge consists of a PD (practice) fuze, an inert loaded projectile body, fin assembly, four propellant increments, obturating ring and an ignition cartridge (with integral primer). The cartridge with the M751, PD fuze resembles the 81MM M821 HE cartridge. These practice cartridges are ballistic matches to the HE cartridges and produce a similar signature (flash, audible sound, and smoke cloud) upon impact on the ground.

Functioning:

When the cartridge is loaded, it slides down the mortar tube until the percussion primer in the ignition cartridge strikes the firing pin in the base cap of the mortar. The primer ignites the ignition cartridge which ignites the propellant charge. Gases from the burning propellant expel the projectile from the mortar tube and propel it to the target. The projectile is fin-stabilized in flight. The acceleration arms the fuze. The cartridge travels down-range and impacts the target. The fuze functions on impact. A pyrotechnic smoke charge in the fuze produces a flash, an audible sound, and a smoke cloud.

Tabulated Data:

Complete Round:	
Type	Practice (full range)
Weight	9.40 lb
Length	19.55 in.
Projectile:	
Body material	Steel
Color	Blue w/white markings and 1 brown ban
Filler and weight	Hydrocal (inert), 2.05 lb
Components:	
Ignition cartridge	M299 (with integral primer)
Propellant charge	M220
Fuze	PD, M751
Fin assembly	M24
Maximum range	5700 m
Maximum muzzle velocity	305 mps

CARTRIDGE, 40-MILLIMETER: HEI-T, SD, MK11, MK2, MV2890

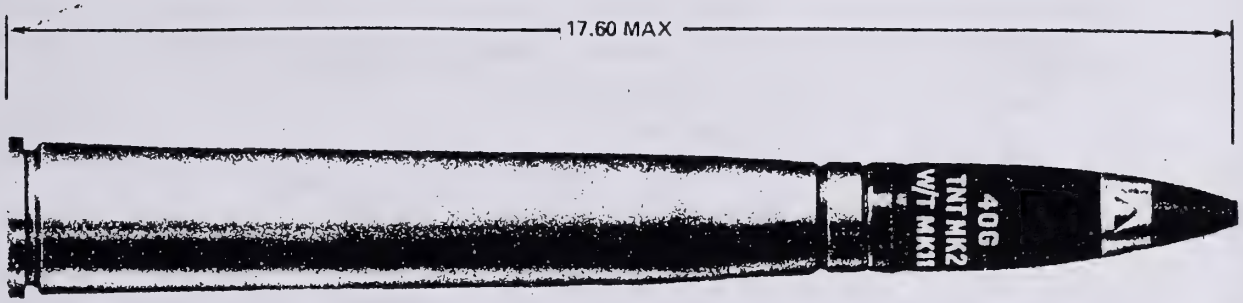

AR199875

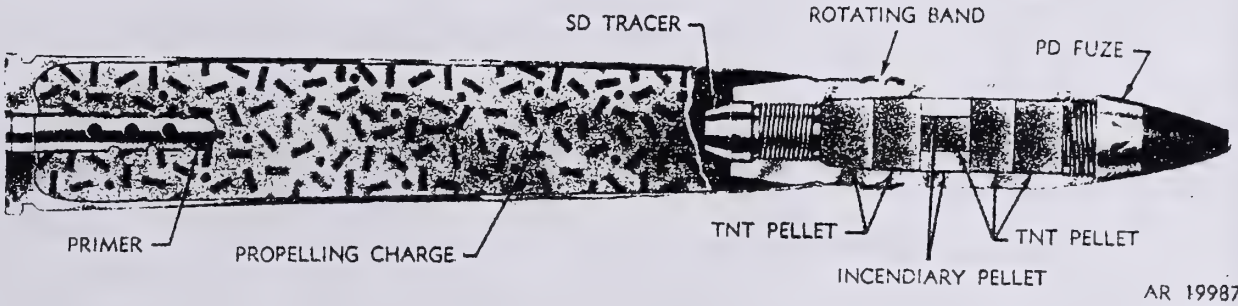

AR 199874

Type Classification:

Std OTCM 37119 dtd 1959.
(MK2 only, CON MSR 11756003)

Use:

This fixed ammunition is used in 40-mm gun cannons for firing against materiel.

Description:

The relatively thin-walled projectile contains a burster charge, an incendiary charge, a point-detonating (PD) fuze, and a shell-destroying (SD) tracer. The projectile nose is threaded to receive the fuze. The shell-destroying tracer assembly is contained in the boat tailed base of projectile, which is internally threaded, and extends approximately 0.60-inch beyond the base. The shell-destroying tracer consists of an igniting charge, a red tracer composition, and a relay igniting charge. The cartridge case, either brass or steel, is crimped rigidly to the projectile by means of a 360° crimp. The base of the cartridge case contains a percussion primer consisting of a perforated tube containing black powder and a percussion element.

Functioning:

When the firing pin of the weapon strikes the percussion primer, the black powder in the primer tube is ignited. Sparks from the black powder ignite the propellant charge to impart velocity to the projectile and to ignite the tracer. The high explosive bursting charge is detonated either by the fuze upon contact with the target, or by the tracer relay igniting charge. The tracer composition burns with a visible trace for 8 to 10 seconds.

Difference Among Models:

Cartridges manufactured by the Navy may be distinguished by the painting on the fuzes: the fuze for the Navy HEI-T cartridge is painted red and white (red tip on fuze.)

Tabulated Data:

Complete round:

Type	HEI-T
Weight	4.75 lbs.
Length	17.60 in.

Cannon used with ---- M1 series, M2 series, MK1 (Navy)

Projectile:

Body material ------- Steel

Color:

Army mfg -------- Olive drab w/yellow marking

Navy mfg -------- Green w/black band

Filler and weight ---- TNT-0.14 lb. Tracer incendiary charge-36 gr.

Components:

Cartridge case ------ MK2, MK2 Mod, or MK3

Tracer ---------- MK11, MK11 Mods

Tracer charge ----- Igniting charge, a red tracer composition, and a relay igniting charge of black powder

Fuze ---------- PD, MK27

Propelling charge -- M1 propellant, 0.72 lb

Primer ---------- MK22, M38A1, M38B2

Burster charge ---- TNT powder and incendiary charge

Performance:

Maximum range ---- 3932 m (4300 yds)

Muzzle velocity ---- 879 mps (2890 fps)

Temperature Limits:

Firing:

Lower limit ------- -40°F

Upper limit -------- +125°F

Storage:

Lower limit ------- -80°F (for period not more than 3 days)

Upper limit -------- +160°F (for period not more than 4 hrs/day)

*Packing (Navy) --------- 4 cartridges in charger clip; 4 charger clips in metal box

*Packing Box:

Weight ---------- 110 lbs.

Dimensions ---------- 22 x 11.75 x 11.75 in.

Cube ---------- 1.7 cu. ft.

*Packing (Army) --------- 1 cartridge in fiber container; 8 containers in wooden box

*Packing Box:

Weight ---------- 59 lbs.

Dimensions ---------- 21-11/16 x 7-31/32 x 12-9/16 in.

Cube ---------- 1.3 cu. ft.

*NOTE: See SC for complete packing data including NSN's.

Shipping and Storage Data:

Quantity-distance class ---------- 4

Storage compatibility group ---------- E

DOT shipping class ----- A

DOT designation ------- AMMUNITION FOR CANNON WITH EXPLOSIVE PROJECTILES

DODAC ---------- 1310-B559

Drawing number ------- 75-1-166

References:

DARCOM P 700-3-3
SB 700-20
SC 1305/30-IL
TM 9-1300-251-20
TM 9-2350-202-12
TM 9-7218

CARTRIDGE, 90-MILLIMETER: HE-T, M71A1 AND HE, M71

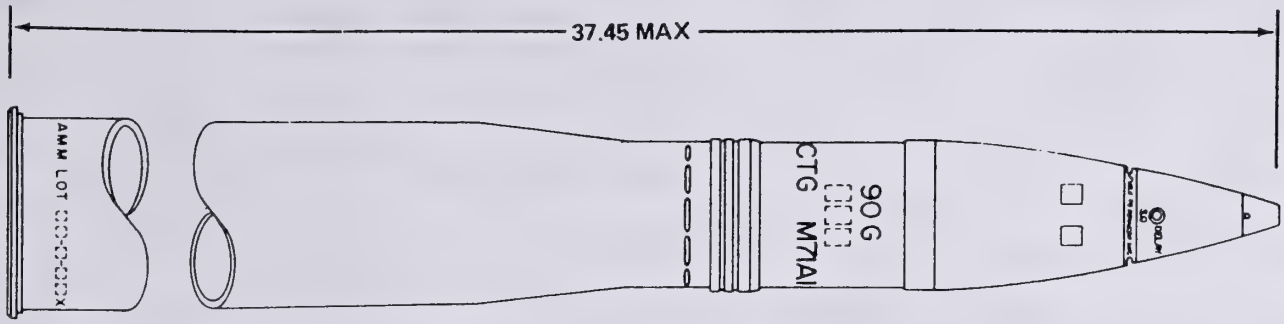

AR199839

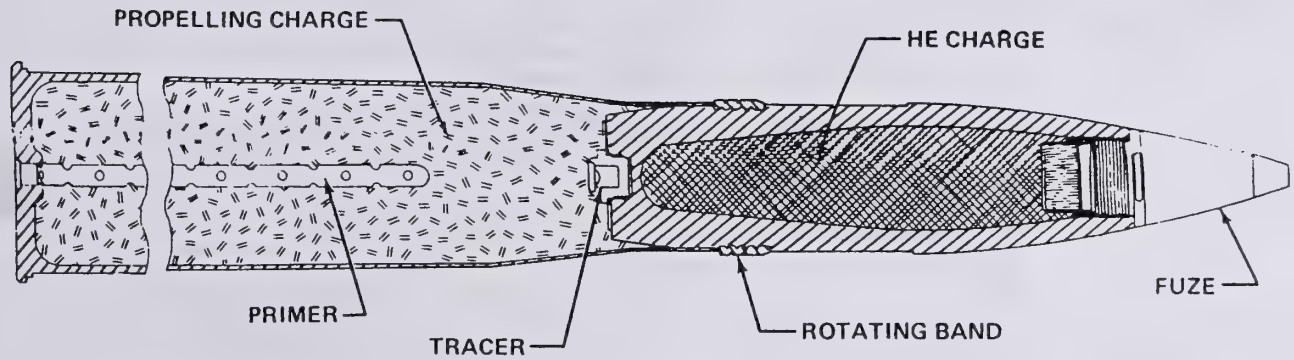

AR199838

Type Classification:

Std OTCM 37436 dtd 1960 (M71A1)
CON MSR 11756003 (M71)

Use:

These cartridges are used in 90-mm guns against personnel and materiel, producing blast and fragmentation at the target.

Description:

The hollow steel forged projectile has a boattailed base and a streamlined ogive. Fuze cavity may be normal or deep cavity type. The projectile is loaded with 2.15 pounds (1.68 pounds, deep cavity) of Composition B or TNT. A tracer is threaded into the projectile base (M71A1). A point detonating fuze is assembled to the projectile. Loaded projectile weights fall into one of three weight zones.

Functioning:

When the weapon is fired, the burning propellant ignites the tracer and creates gases which propel the projectile out of the gun tube. The tracer burns for a minimum of three seconds. Upon impact, the fuze functions on superquick or delay, as preset, and detonates the high explosive filler, producing blast and fragmentation.

Difference Between Models:

M71A1 has a tracer; M71 does not. M71A1 has M1 propellant resulting in lower velocity; M71 has M6 or M15 propellant.

Tabulated Data:

Complete round:

	M71A1	M71
Type	HE-T	HE
Weight	38.8-39.54 lbs.	41.19-41.93 lbs.

Length ---------- 37.46 in.
Cannon used with -------- M36, M41 or M54
Projectile:
Body material -------- Steel
Color ---------- Olive drabw/yellow marking
Filler and weight ---- Composition B-2.15 lbs.
Components:
Cartridge case ------ M19, M19B1
Propelling charge --- M1-5.33 lbs. (M71A1) M6 or M15-7.31 lbs. (M71)
Primer ---------- M28B2, M28A2
Tracer ---------- XM10 (M71A1)
Fuze ---------- PD, M51A5, M557; MTSQ, M520 Series, M564

Performance:
Maximum range ----- 15,800 meters (17,300 yds.) (M71A1) 17,800 meters (19,475 yds.) (M71)
Muzzle velocity ----- 730 mps (2,400 fps) (M71A1) 823 mps (2700 fps) (M71)

Temperature Limits:

Firing:
Lower limit -------- - 40°F
Upper limit -------- + 125°F
Storage:
Lower limit -------- - 80°F (for period not more than 3 days)
Upper limit -------- + 160°F (for period not more than 4 hrs/day)
* Packing ---------- 1 round per fiber container; 2 containers per wooden box.
* Packing Box:
Weight ---------- 132 lbs.
Dimensions ---------- 43-5/8 x 13 x 8-5/32 in.
Cube ---------- 2.69 cu. ft.
*NOTE: See SC for complete packing data including NSN's.

Shipping and Storage Data:

Quantity-distance data ---------- 5
Storage compatibility --- E
DOT shipping class ----- A
DOT designation ------- AMMUNITION FOR CANNON WITH EXPLOSIVE PROJECTILE
DODAC ---------- 1315-C280 (M71A1)
1315-C265 (M71)
1315-C266(M71)
1315-C267(M71)
Drawing numbers ------ 8849017-1 (M71A1)
75-1-157 (M71)

Limitations:

None

References:

SC 1305/30-IL
SB 700-20
DARCOM P 700-3-3
TM 9-1300-251-20
TM 9-2350-224-10
TM 9-7012

CARTRIDGE, 90 MILLIMETER: HEAT, M348A1 (T108E46) AND M348 (T108E40)

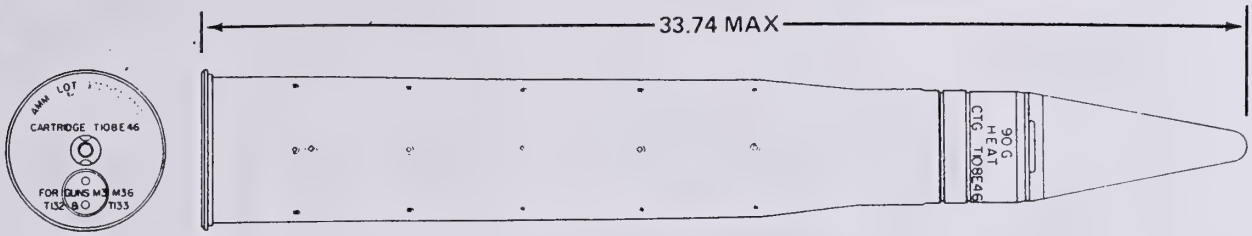

AR 199520

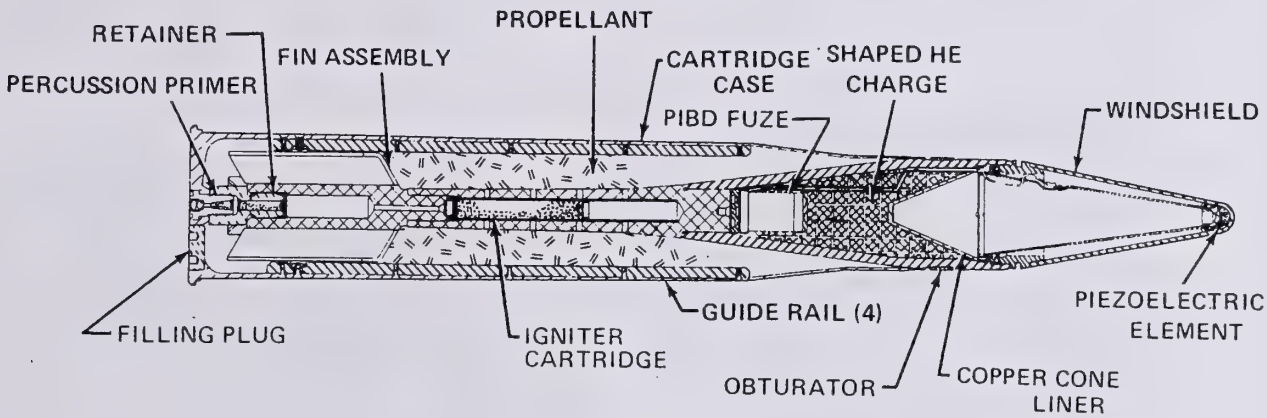

AR 199519

Type Classification:

OBS AMCTC 6267 dtd 1968.

Use:

This cartridge is fired from 90mm gun cannons against armored targets.

Description:

The cartridge consists of a fin-stabilized steel projectile containing a high explosive shaped charge and a brass cartridge case loosely filled with propellant. An inverted copper cone liner in the front of the projectile serves to shape the Comp B charge, and a streamlined windshield houses a piezoelectric element to initiate the PIBD fuze in the base. An obturator band encircles the projectile above the lip of the cartridge case. An igniter and fin assembly is threaded into the base of the projectile and extends the length of the cartridge case through the propelling charge. The igniter is a perforated shaft filled with 400 grains of black powder. The four fixed fins are attached to the base of the assembly, and the igniter tube is closed with a threaded retainer containing approximately 20 grains of black powder. The percussion primer is in turn threaded into the retainer, flush with the base of the cartridge case, and contains 7 grains of black powder. The interior of the cartridge case is fitted with guided rails for the projectile fins. A filling plug is threaded into

the base of the cartridge case for filling the case with the propelling charge after cartridge assembly.

Functioning:

When the primer is struck by the firing pin of the weapon, the black powder is ignited through primer, retainer, and igniter to flash through the igniter perforations and ignite the propelling charge. Rapidly expanding gases from the burning propellant force the projectile through the gun barrel with a velocity of 2800 feet per second. The obturator expands to prevent escape of gas pressure past the projectile while it is in in the barrel, and the fins stabilize the projectile in flight. Upon impact with the target, distortion of the piezoelectric unit generates an electric current to initiate the fuze and detonate the explosive charge. As the copper cone is crushed, the detonation results in an intensely focused, high velocity shock wave which causes failure of the target armor, and a jet of molten metal penetrates the target interior.

Difference between Models:

Model M348 has a cone tube extension which is not present in the M348A1. The fin cross-section of the M348 is rectangular while that of the M348A1 is T-shaped.

Tabulated Data:

Complete round:
- Type ---------- HEAT
- Weight ---------- 34.79 lb
- Length ---------- 33.74 in.
- Cannon used with - M3,M36,T132,T133

Projectile:
- Body Material ---- Steel forging
- Color ---------- Olive drab w/black markings
- Filler and weight- Comp B, 1.56 lb

Components:
- Cartridge case --- T27E2
- Propelling charge- M6 (80.0 oz), M1 (87.0 oz)
- Primer ---------- T69
- Igniter, fin assembly ------- T33E2
- Fuze ---------- PIBD, M509A1

Performance:
- Maximum range --- 11,650 m (13,010 yd)
- Muzzle velocity - 832 mps (2800 fps)

Temperature Limits:

Firing:
- Lower limit ----- -40°F (-40°C)
- Upper limit ----- +125°F (+52°C)

Storage:
- Lower limit ----- -80°F (for period not more than 3 days) (-62.2°C)
- Upper limit ----- +160°F (for period not more than 4 hr/day) (+71.1°C)

*Packing ---------- 1 round per fiber container; 2 containers per wooden box

*Packing Box:
- Weight ---------- 115.7
- Dimensions ------ 39-15/16 x 13 x 8-5/32 in.
- Cube ---------- 2.4 cu ft

*NOTE: See SC for complete packing data including NSN's.

Shipping and Storage Data:

Storage class/SCG --- (12) 1.2E
DOT shipping class -- A
DOT designation ----- AMMUNITION FOR CANNON WITH EXPLOSIVE PROJECTILES
DODAC ---------- 1315-C268
Assembly Dwg No ----- 75-1-359

Limitations:

None

References:

TM 9-1300-251-20
TM 9-2350-224-10
TM 9-7012

CARTRIDGE, 90-MILLIMETER: BLANK, M394

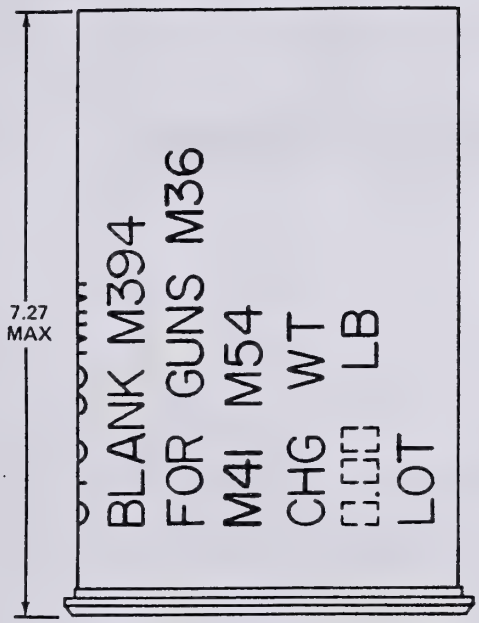

AR199779

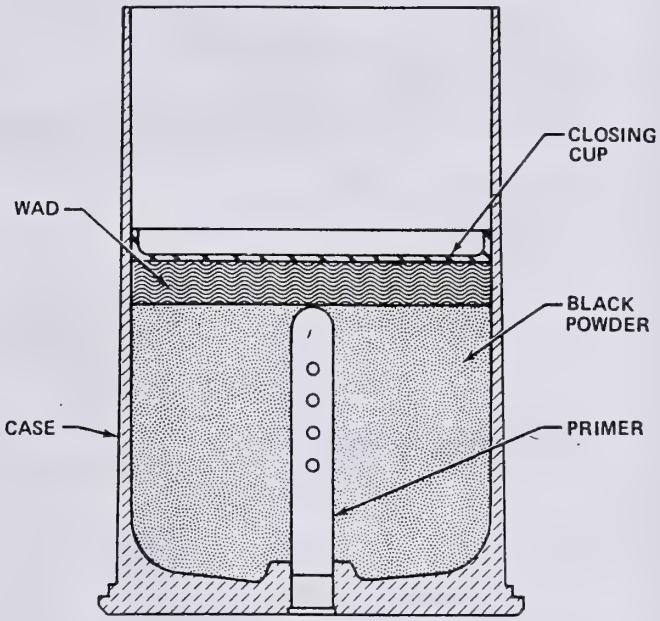

AR199778

Type Classification:

Std OTCM 38091 dtd 1962

Use:

This blank cartridge is provided for saluting purposes and simulated firing in 90-mm guns.

Description:

The cartridge consists of a cartridge case, a primer, and a charge of black powder. A polystyrene closing cup is used to seal the charge inside the case.

Functioning:

After the primer is initiated by the firing pin of the weapon, the black powder charge is ignited, producing a loud report and flash.

Tabulated Data:

Complete round:
- Type ---------- Blank
- Weight ---------- 8.23 lbs.
- Length ---------- 7.27 in.
- Cannon used with ---- M36, M41 or M54

Components:
- Body material ------- Brass or aluminum
- Filler and weight ---- Black powder and potassium nitrate-1.75 lb.
- Cartridge case ------ M27, M27B1
- Primer ---------- M1A2

Temperature Limits:

Firing:
- Lower limit -------- - 40°F
- Upper limit -------- + 125°F

Storage:
- Lower limit -------- - 80°F (for period not more than 3 days)
- Upper limit -------- + 160°F (for period no more than 4 hrs/day)

*Packing ---------- 1 cartridge in fiber container; 8 containers per wooden box

*Packing Box:
Weight ---------- 98.6 lbs.
Dimensions ---------- 25-13/16 x 12-15/16 x 10-23/32 in.
Cube ---------- 2.12 cu. ft.

*NOTE: See SC for complete packing data including NSN's.

Shipping and Storage Data:

Quantity-distance class ---------- 4
Storage compatibility ---------- E
DOT shipping class ---------- B
DOT designation ---------- AMMUNITION FOR CANNON WITHOUT PROJECTILES
DODAC ---------- 1315-C261
Drawing number ---------- 7549210

Limitations:

Closure debris from blank ammunition can be expelled a distance of 300 feet forward of the weapon muzzle.

References:

SC 1305/30-IL
SB 700-20
AMCP 700-3-3
TM 9-1300-251-20
TM 9-2350-224-10
TM 9-7012

CARTRIDGE, 105-MILLIMETER: APDS-T, M392A2 AND M392

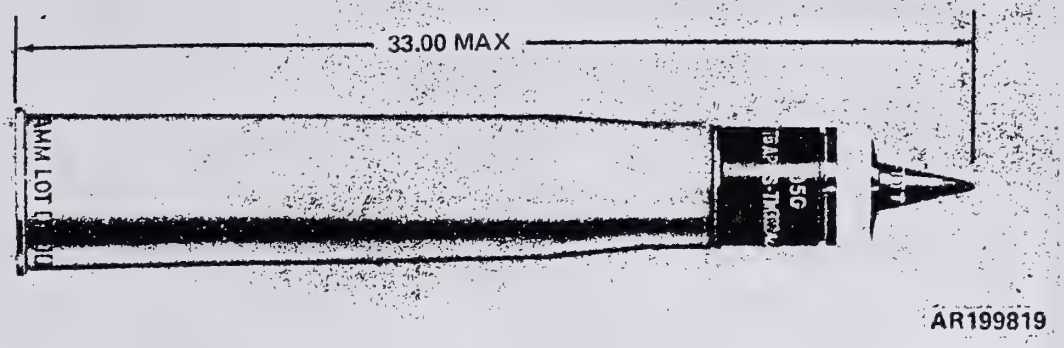

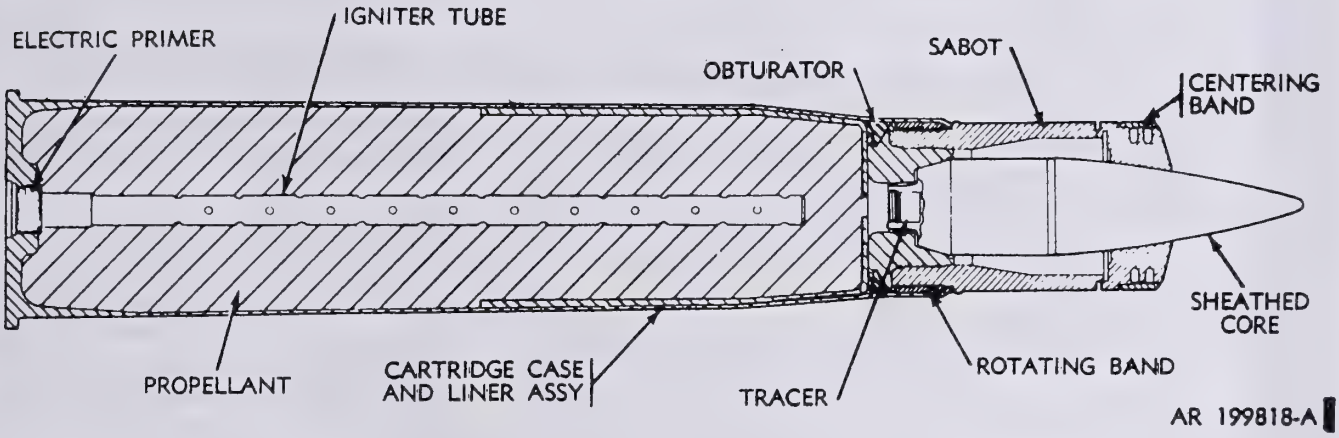

Type Classification:

M392A2 ---------- Std MSR 02787001

M392 ---------- Std OTCM 38116
dtd 1961

Use:

This cartridge is a hypervelocity armor-piercing type with discarding sabot, intended for use in 105-mm guns against armored targets.

Description:

The projectile consists of a sheathed tungsten carbide core with tracer and a sabot. The core, which is the armor-piercing element, is carried within the sheath with the sabot assembled on the exterior surface. A plastic band is positioned on the outside diameter of the sabot at the forward end. A fiber rotating band and a rubber obturator are assembled on the outside diameter near the base of the sabot. The igniter tube of the electric primer extends almost the entire length of the propellant loosely packed in the cartridge case.

Functioning:

The electrically initiated primer ignites the propelling charge. Gases produced by the burning propellant propel the projectile from the gun and ignite the tracer which burns for a minimum of 2.5 seconds. Setback, centrifugal and air pressure forces cause the sabot to discard upon leaving the gun tube. The

sheathed core is spin stabilized and penetrates target solely by kinetic energy.

Difference Between Models:

The M392 cartridge is of United Kingdom manufacture and bears the U. K. designation of L36A1. The M392 is fitted with U. K. Primer L4A1 or L4A2.

Tabulated Data:

Complete round:	
Type	APDS-T
Weight	41.0 lbs.
Length	33.0 in.
Cannon used with	M68
Projectile:	
Body material	Tungsten carbide core
Color	Black w/white marking
Components:	
Cartridge case	M115, M115B1
Propelling charge	M30 (T36)
Primer	M80A1
Tracer	M13
Performance:	
Maximum range	36,745 meters (40,162 yds.)
Muzzle velocity	1,478 mps (4,850 fps)

Temperature Limits:

Firing:	
Lower limit	- 40°F
Upper limit	+ 125°F
Storage:	
Lower limit	- 80°F (for period not more than 3 days)
Upper limit	+ 160°F (for period not more than 4 hrs/day)

*Packing	1 round per fiber container; 2 containers per wooden box
*Packing Box:	
Weight	126 lbs.
Dimensions	39-7/8 x 14-1/8 x 8-23/32 in.
Cube	2.8 cu. ft.

*NOTE: See SC for complete packing data including NSN's.

Shipping and Storage Data:

Quantity-distance class	4
Storage compatibility	E
DOT shipping class	B
DOT designation	AMMUNITION FOR CANNON WITH SOLID PROJECTILES
DODAC	1315-C505, C506
Drawing number	8863427

Limitations:

United Kingdom Cartridge L28A1, similar to the M392 except for its primer (L1A2, L1A3 or L1A4) is not to be fired in 105-mm Gun M68 except under combat emergency conditions. The clip will remain on the cartridge case at all times until the cartridge is partially chambered.

References:

SC 1305/30-IL
SB 700-20
DARCOM P 700-3-3
TM 9-1000-213-35
TM 9-1300-251-20
TM 9-2350-215-10

CARTRIDGE, 105 MILLIMETER: HE, M1

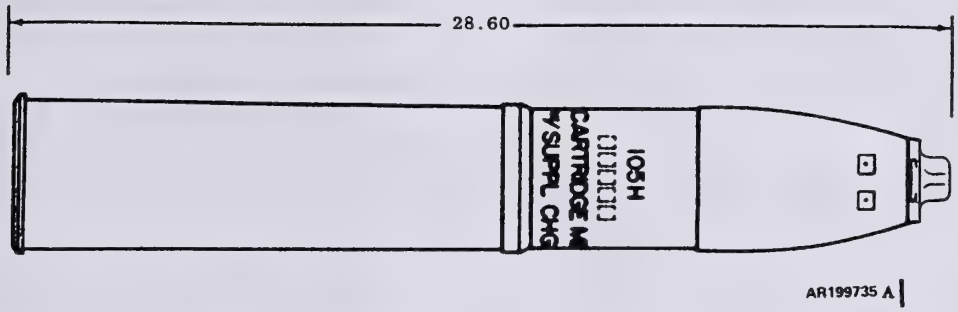

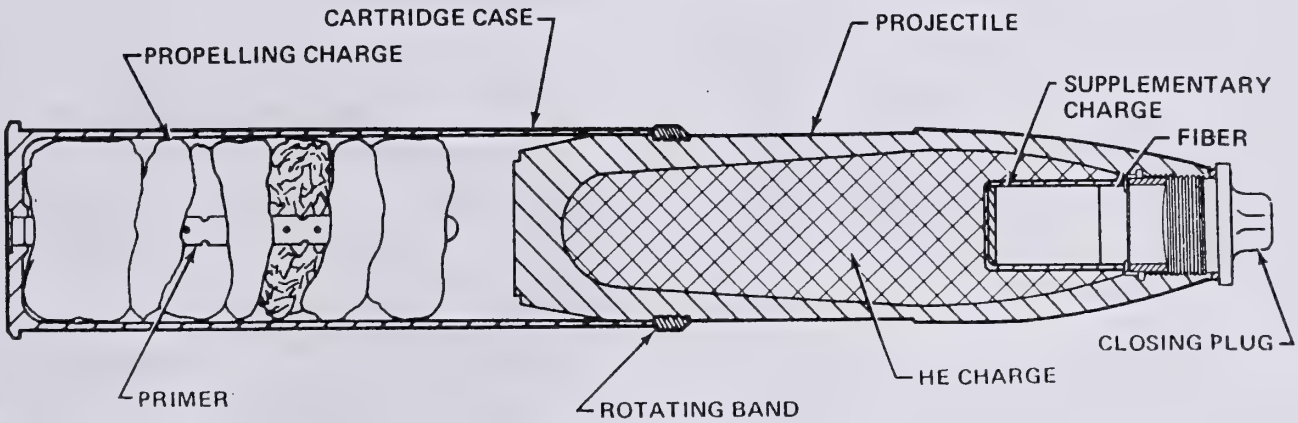

AR199734

Typo Classification:

Std AMCTC 4181 dtd 1966

Use:

The projectile of this cartridge contains high explosive and is used for fragmentation, blast, and mining in support of ground troops and armored columns.

Description:

The projectile consists of a hollow steel forging with a boattail base, a streamlined ogive, and gilding metal rotating band. A base cover is welded to the base of the projectile for added protection against the entrance of hot gases from the propelling charge during firing. The high explosive (HE) filler within the projectile may be either cast TNT or Composition B. A fuze cavity is either drilled or formed in the filler at the nose end of the projectile. This cavity may be either shallow or deep. A cavity liner, to preclude dusting of HE during transportation and handling, is seated in the cavity and expanded into the lower projectile fuze threads. A supplementary charge is placed in the fuze cavity of projectiles having deep cavities. Projectiles with shallow cavities or deep cavities containing a supplementary charge use only short intrusion

fuzes, PD, or MT. Those with deep cavities will accept the long intrusion proximity fuze after removing the supplementary charge. Projectiles may be shipped with a PD or MTSQ fuze or with a closing plug. When shipped with a closing plug, a chip board spacer is assembled between the supplementary charge and plug to limit movement of the former during transportation and handling.

The cartridge case contains a percussion primer assembly and seven individually bagged and numbered propeling charge increments. The base of the cartridge case is drilled and the primer assembly is pressed into the base. The percussion primer assembly consists of a percussion ignition element and a perforated flash tube containing black powder. The seven numbered increment bags are tied together, in numerical order, with acrylic cord. These are assembled into the cartridge case, around the primer flash tube, with Increment 1 at the base of the cartridge case and Increment 7 toward the mouth of the cartridge case.

Functioning:

If the projectile is unfuzed, the closing plug is removed and a fuze assembled to the projectile prior to adjusting the charge and loading the cartridge into the weapon. Impact of the weapon firing pin results in the initiation of the percussion primer which, in turn, ignites the black powder in the flash tube. The flash tube provides for uniform ignition of the propelling charge producing a rapid expansion of the propellant gas which propels the projectile out of the weapon tube. Engagement of the projectile rotating band with the rifling of the weapon tube imparts spin to the projectile providing inflight stability. Projectile functioning is dependent upon the fuze used and may function on impact (instantaneous or delay), function above ground either at a predetermined height based upon time of flight or function in proximity with the target area. Fuze function detonates the HE projectile filler resulting in projectile fragmentation and blast.

Tabulated Data:

Complete round:
- Type ---------- HE
- Weight ---------- 39.92 lb
- Length ---------- W/closing plug 28.60 in. max
- Cannon (weapon) used with ------- M49 (M52,M52A1), M2A1,M2A2(M101, M101A1),M103 (M108),M137 (M102)

Projectile:
- Body material ----- Forged steel
- Color ---------- Olive drab w/yellow marking

Filler weight:
- Comp B:
  - Normal cavity --- 5.08 lb
  - Deep cavity ----- 4.60 lb
- TNT:
  - Normal cavity --- 4.80 lb
  - Deep cavity ----- 4.25 lb

Weight Zone:

Loaded Shell w/Suppl Charge (without fuze)	Over lb	Up to & Incl lb	Zones	Marking
Pounds	29.90	30.60	1	▪
	30.50	31.20	2	▪ ▪
	31.10	31.80	3	▪ ▪ ▪

NOTE: Comp B filled projectiles fall in weight zone 2-1/2 Cartridge Case:

Model	Matl	Wt (lb) (approx)
M14	Brass	5.9
M14B1	Steel, Drawn	5.4
M14B3	Steel, 5 pc spiral wrap	4.7
M14B4	Steel, 3 pc spiral wrap	4.7

Propelling charge:
- Model ---------- M67

Components:

Increment No.	Prop Comp & Type	Web Size in. approx	Wt oz Approx
1	M1, Type II	.014	8.6 Single Perf
2	M1, Type II	.014	1.4 Single Perf
3	M1, Type I	.026	2.5 Multi Perf
4	M1, Type I	.026	3.8 Multi Perf
5	M1, Type I	.026	5.8 Multi Perf
6	M1, Type I	.026	8.8 Multi Perf
7	M1, Type I	.026	14.3 Multi Perf

Weight, Total Increments 1-7 ----- 2.83 lb

Percussion primer assembly:

	M28A2	M28B2
Primer	M61	M61
Black powder	CI 1, Spec MIL-P-223 (Note B)	CI 1, Spec MIL-P-223 (Note B)
Weight (lb)		
(primer)	.00014	.00014
(BP)	.043	.043
Body	Brass, Type 1	Steel, Type 2

Fuzes ---------- PD: M557, M78 Series; M739 Series; MTSQ: M582 Series, M564; Prox: M513 Series, M728, M732

Performance:

Using M52, M52A1 and M101/M101A1 howitzers.

Charge	Muzzle Velocity (fps)	(mps)	Maximum Range (mtr)	(yd)
1	650	198.1	3510	3840
2	710	216.4	4110	4495
3	780	237.7	4860	5315
4	875	266.7	5950	6505
5	1020	310.9	7650	8370
6	1235	376.4	9380	10,260
7	1550	472.4	11,270	12,330

Maximum range ----- 11,270 mtr (12,330 yd)

Muzzle velocity --- 472.4 mps (1550 fps)

Using M102 and M108 howitzers.

Charge	Muzzle Velocity (fps)	(mps)	Maximum Range (mtr)	(yd)
1	673	205	3700	4040
2	732	223	4300	4700
3	810	247	5200	5690
4	912	278	6300	6890
5	1066	325	8100	8500
6	1289	393	9600	10,500
7	1621	494	11,500	12,590

Maximum range ----- 11,500 mtr (12,590 yd)

Muzzle velocity --- 494 mps (1621 fps)

Temperature Limits:

Firing:

Lower limit ------- -40°F -(-40°C)

Upper limit ------- +125°F-(+52.0°C)

Storage:

Lower limit ------- -80°F (for periods not exceeding three days) (-62.2°C)

Upper limit ------- +160°F (for periods not exceeding 4 hr/day (+71.1°C)

*Packing ---------- 1 round in fiber container; 2 containers in wooden box

*Packing Box:

Weight w/cartridge- 120 lb

Dimensions -------- 37-1/4 x 11-15/16 x 7-19/32 in.

Cube ---------- 2.0 cu ft

*NOTE: See SC for complete packing data including NSN's.

Shipping and Storage Data:

Quantity-distance class ---------- (12) 1.2

Storage compatibility group ---------- E

DOT shipping class --- A

DOT designation ----	AMMUNITION FOR CANNON WITH EXPLOSIVE PROJECTILES
DODAC ----------	1315-C445
Drawing number -----	9211611 (shipped without fuze)

DODAC---------- 1315-C444
When cartridge is shipped with either a PD or MTSQ fuze.

Limitations:

For proximity mode, VT M513 proximity fuzes are limited to zones 2 through 6. Zone 7 in combat emergency only. For Impact Action, zones 4 through 6 only.

VT Fuze M728, for proximity or impact action, Zones 1 through 6. Zone 7 for proximity action only in a combat emergency.

References:

SC 1305/30-IL
SB 700-20
AMC-P 700-3-3
TM 9-1015-203-12
TM 9-1015-234-12
TM 9-1300-251-20

PROJECTILE, 155 MILLIMETER: HE, M107 (NORMAL AND DEEP CAVITY)

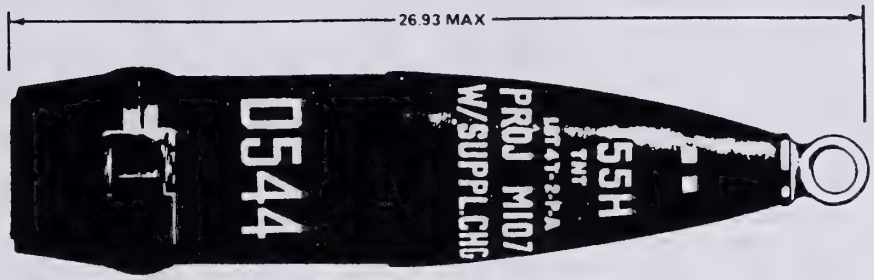

AR199685

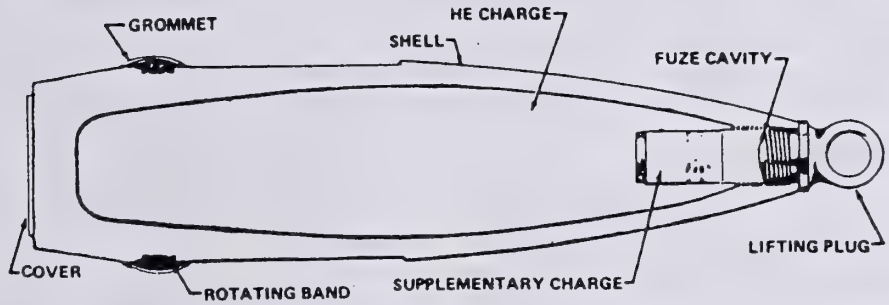

AR199684

Type Classification:

Deep Cavity: Std OTCM 36841, dtd 1958.
Normal Cavity: Std OTCM 36841, dtd 1958.

Use:

This projectile is fired from 155mm howitzers and is used for blast effect, fragmentation, and mining.

Description:

The projectile is a hollow steel shell filled with 14.6 pounds of TNT or 15.4 pounds of Composition B. The shape is ogival with a boattail for aerodynamic efficiency. A supplementary charge of 0.3 lb. TNT is contained in an aluminum liner in the deep fuze cavity. A threaded lifting plug closes the fuze cavity at the nose of the projectile for handling and storage. Point detonating, time or proximity (deep cavity only) fuzes may be used with this projectile. When a proximity fuze is fitted, the supplementary charge is removed. A rotating band encircles the shell casing near the base and is protected by a grommet before loading. A steel plate (base cover) is welded over the base to prevent entry of hot propellant gases into the projectile interior.

Functioning:

When the weapon is fired, the burning propellant charge generates rapidly expanding gases to propel the projectile through the barrel with the velocity required to reach the target. The soft alloy rotating band engages the barrel rifling to impart spin to the projectile for stability in flight. If a point detonating fuze or time fuze is employed, the fuze detonates the supplementary charge on impact (PD) or after the preset time (MT), and the supplementary charge detonates the projectile filler. When a proximity fuze is used, detonation occurs on approach to the target (proximity action). The proximity fuze contains its own booster element to initiate the warhead filler.

Difference Between Models:

155mm HE Projectile M107 (Normal Cavity) has a shallower fuze receptacle and cannot accommodate proximity fuzes. Because of the absence of a supplementary charge, the basic Composition B charge of 15.4 lbs is slightly greater than in the deep cavity projectile.

Tabulated Data:

WEIGHT ZONES
LOADED PROJ (W/O FUZE, W/O PLUG)

Zone	Pounds Over	Pounds Up to & Incl	Marking
2	90.0	91.3	⊡ ⊡
3	91.1	92.4	⊡ ⊡ ⊡
4	92.0	93.7	⊡ ⊡ ⊡ ⊡
5	93.3	94.6	⊡ ⊡ ⊡ ⊡ ⊡

Complete round:
- Type----------HE
- Length w/lifting plug------26.93 in. max
- Length w/o lifting plug----23.89 in.
- Cannon used with----------M1, M1A1, M1A2, M45, M126, M126A1, M185, XM199

Projectile:
- Body material----------Forged steel
- Color----------Olive drab w/yellow markings
- Filler and weight:
  - TNT----------14.6 lb
  - Comp B----------15.4 lb
- Primers:
  - For cannon:
    - M45, M126,M126A1, M199, and M185-----M82
    - M1, M1A1----------MK2A4
- Propelling charges--------M3, M3A1, M4A1, M4A2, M119/M119A1
- Fuzes----------PD: M557, M78 Series; M739 Series; MTSQ: M564, M582 Series Prox: M728 M732

Temperature Limits:

Firing:
- Lower limit---------- -65°F
- Upper limit---------- +145°F

Storage:
- Lower limit---------- -80°F (for periods not more than 3 days)
- Upper limit----------+160°F (for periods not more than 4 hrs/day)

*Packing----------8 projectiles on pallet

*Pallet:
- Weight----------797 lb
- Dimensions----------27-1/8 x 13-5/8 x 32 in.
- Cube----------6.8 cu ft

*NOTE: See SC for complete packing data including NSN's.

Shipping and Storage Data:

Quantity-distance class-------(18) 1.1
Storage compatibility group---D
DOT shipping class----------A
DOT designation----------EXPLOSIVE PROJECTILES

DODAC:
- Deep cavity----------1320-D544
- Normal cavity----------1320-D571

Assembly Dwg No,
- Deep cavity----------9216352

Ballistics:

Cannon M1, M1A1, M45:

Charge	Muzzle Velocity (m/s)	Max Range (mtrs)	Elevation (mils)
1, M3, green bag	207.3	3900	774.4
2, M3, green bag	234.7	4800	698.6

Cannon M1, M1A1, M45: - Continued

Charge	Muzzle Velocity (m/s)	Max Range (mtrs)	Elevation (mils)
3, M3, green bag	268.2	6100	729.2
4, M3, green bag	310.9	7800	749.6
5, M3, green bag	371.9	9700	760.7
3, M4A1, white bag	274.3	6300	702.7
4, M4A1, white bag	316.4	8000	729.9
5, M4A1, white bag	374.6	9700	720.6
6, M4A1, white bag	463.3	12000	759.8
7, M4A1, white bag	563.9	14600	740.8

Cannon M126/M126A1:

Charge	Muzzle Velocity (m/s)	Max Range (mtrs)	Elevation (mils)
1, M3A1, green bag	207.3	3900	729.2
2, M3A1, green bag	236.2	4900	710.1
3, M3A1, green bag	275.8	6500	739.3
4, M3A1, green bag	317.0	8200	744.1
5, M3A1, green bag	374.9	9800	743.2
3, M4A2, white bag	269.7	6200	700.7
4, M4A2, white bag	313.9	8000	700.8
5, M4A2, white bag	373.4	9800	778.8
6, M4A2, white bag	461.8	12000	746.2
7, M4A2, white bag	562.4	14600	772.5

Cannon M185:

Charge	Muzzle Velocity (m/s)	Max Range (mtrs)	Elevation (mils)
1, M3A1, green bag	211.8	4000	673.6
2, M3A1, green bag	237.7	5000	722.4
3, M3A1, green bag	277.4	6500	690.4
4, M3A1, green bag	318.5	8300	760.9
5, M3A1, green bag	374.9	9800	717.2
3, M4A2, white bag	292.6	7200	734.9
4, M4A2, white bag	336.8	8900	736.8
5, M4A2, white bag	393.2	10300	756.1
6, M4A2, white bag	475.5	12400	758.4
7, M4A2, white bag	565.4	14800	760.3
8, M119/ M119A1	684.3	18100	781.5

Cannon M199:

Charge	Muzzle Velocity (m/s)	Max Range (mtrs)	Elevation (mils)
1, M3A1, green bag	212.8	4000	673.6
2, M3A1, green bag	239.8	5000	722.4
3, M3A1, green bag	280.8	6500	690.4
4, M3A1, green bag	322.9	8300	760.9
5, M3A1, green bag	380.1	9800	717.2
3, M4A2, white bag	296.5	7200	734.9
4, M4A2, white bag	340.9	8900	736.8
5, M4A2, white bag	398.0	10300	756.1
6, M4A2, white bag	482.0	12400	758.4
7, M4A2, white bag	574.3	14800	760.3
8, M119/ M119A1	684.3	18100	781.5

PROJECTILE, 8 INCH: HE, M106

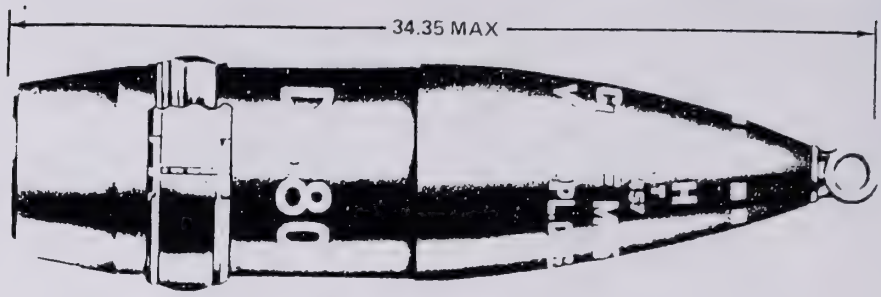

AR199705

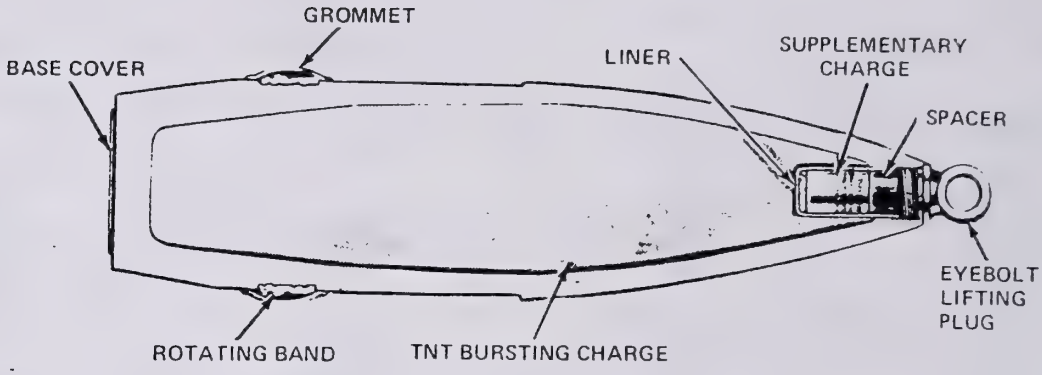

AR199704

— Type Classification:

Std OTCM 36841 dtd 1958

Use:

This projectile is used against personnel and materiel, producing blast and fragmentation at the target.

Description:

The projectile consists of a hollow steel forging with a boattailed base, a steamlined ogive, and a gilding metal rotating band. A base cover is welded to the base of the projectile for added protection against the entrance of hot gases from the propelling charge during firing. The nose of the propelling is fitted with a thread eyebolt-lifting plug to facilitate handling and provide a closure for the fuze cavity. The projectile is made with either a shallow or deep fuze cavity and may be loaded with TNT or Composition B. Deep cavity projectiles contain a supplementary charge in the fuze cavity. A cardboard spacer is placed in the fuze cavity between the supplementary charge and the lifting plug to limit movement of the supplementary charge during shipping and handling. The rotating band is protected by a removable grommet. The loaded projectile is zoned into one of five weight zones ranging from 191.4 to 204.3 pounds. The weight zone of the projectile is

indicated by the number squares and prick punch marks on the ogive of the projectile.

Functioning:

The grommet and lifting plug are removed from the projectile and the projectile is fitted with one of the authorized fuzes and rammed into the weapon chamber. When deep cavity projectiles are fitted with a proximity fuze the supplementary charge is removed. Fuze arming occurs after firing, during projectile flight downrange. Depending upon the type of fuze fitted, the fuze functions detonating the projectile on impact, after an elapsed time or on sensing of the target.

Tabulated Data:

Projectile:
Type ---------- HE

WEIGHT ZONE INFORMATION

LOADED PROJECTILE
W/O FUZE
W/O LIFTING PLUG

ZONE	OVER LB	UP TO & INCL	MARKING
2	191.4	194.3	⊡ ⊡
3	193.9	196.8	⊡ ⊡ ⊡
4	196.4	199.3	⊡ ⊡ ⊡ ⊡
5	198.9	201.8	⊡ ⊡ ⊡ ⊡ ⊡
6	201.4	204.3	⊡ ⊡ ⊡ ⊡ ⊡ ⊡

Length:
W/O Lifting Plug- 31.43 in.
W/Lifting Plug ---- 34.35 in. (max)
Diameter:
Rotating Band ---- 8.28 in.
Bourrelet -------- 7.998 (max)
Body material -------- Steel
Color ---------- Olive drab w/yellow markings
Filler and weight --- TNT 36.3 lb Comp B 38.8 lb
Supplementary Charge ---------- TNT 0.3 lb
Grommet ---------- 3 types, metal w/wire ties, fiberglass or plastic w/metal lever

Weapon system information:

	Weapon M115 towed	Model M110SP M2A2	Type M55SP
Cannon Tube	M2A1,M2	(M2A1E1)	M47
Prop Chg	M1, M2	M1, M2	M1, M2
Primer	MK2A4	M82, MK15	M82, MK15
Fuze PD	M78,M557, M739	Same	Same
Fuze MTSQ	M564,M582	Same	Same
Fuze Prox			M728,M732

Temperature Limits:

Firing:
Lower limit -------- -40°F (-40°C)
Upper limit -------- +125°F (+52°C)
Storage:
Lower limit -------- -80°F for periods of not more than 3 days (62°C)
Upper limit -------- +160°F for not more than 4 hr/day (+71.1°C)
*Packing ---------- 6 projectiles on pallet

*Pallet:
Weight ---------- 1253 lb
Dimensions ---------- 28-1/2 x 19-1/4 x 39-1/2 in.
Cube ---------- 12.4 cu ft

*NOTE: See SC for complete packing data including NSN's.

Shipping and Storage Data:

Quantity-distance class ---------- 1.1
Storage compatibility group ---------- D
DOT shipping class--------- A
DOT designation ---------- EXPLOSIVE PROJECTILE
DODAC ---------- 1320-D680
Drawing number ---------- 9207909

Ballistics-(M2,M2A1,M2A2 & M47 Cannons)

	Muzzle Velocity (fps)	Maximum Range (mtr)	Chamber Pressure (psi)
Charge 1,M1, green bag	820	5600	
Charge 2,M1, green bag	900	6600	
Charge 3,M1, green bag	1000	8000	
Charge 4,M1, green bag	1150	9700	
Charge 5,M1, green bag or M2,white bag	1380	11,600	
Charge 6,M2 white bag	1640	13,900	
Charge 7,M2, white bag	1950	16,800	

Ballistics (XM201 Cannon)

	Muzzle Velocity (fps)	Maximum Range (mtr)	Chamber Pressure (psi)
Charge 1,M1 green bag	838	5946	
Charge 2,M1, green bag	920	7099	
Charge 3,M1, green bag	1016	8450	
Charge 4,M1, green bag	1161	10,435	
Charge 5,M1, green bag or	1390	12,405	
M2,white bag	1463	12,987	
Charge 6,M2, white bag	1705	15,203	
Charge 7,M2, white bag	1991	17,901	
Charge 8, XM188E2, white bag	2330	21,300	31,900

Limitations:

None

References:

SC 1305/30-IL	TM 9-1300-206
SB 700-20	TM 9-1300-251-20
DARCOM-P 700-3-3	TM 9-1300-251-34
TM 9-2300-216-10	TM 9-3004
TM 9-1300-250	TM 9-2350-210

CARTRIDGE, 60 MILLIMETER: HE, M49A3 (M49A2E1) AND M49A2

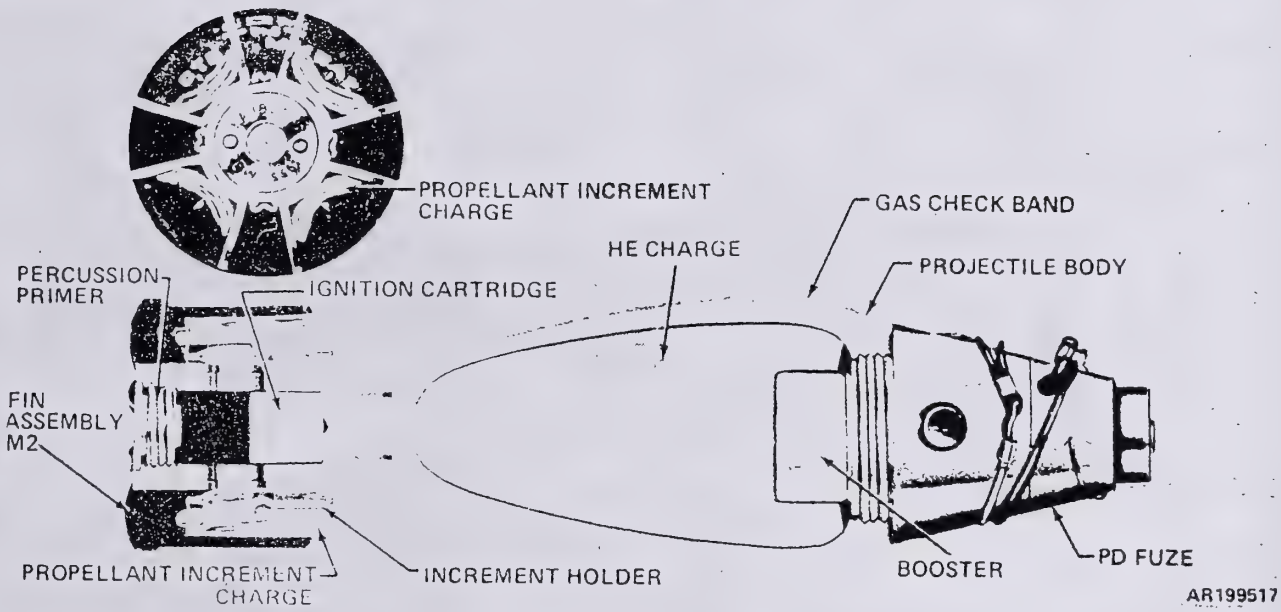

Type Classification:

M49A3: Std AMCTC 6632, dtd 1969.
M49A2: Std OTCM 37119, dtd 1959.

Use:

This cartridge is fired in 60mm Mortars M2 or M19 for use against personnel and materiel, providing both fragmentation and blast effect.

Description:

The complete round consists of a projectile body, a point-detonating fuze (staked), a fin assembly, four increments of propellant charge, an ignition cartridge, and a percussion primer. The projectile body is of pearlitic malleable iron (PMI), and is threaded internally at the nose to accept the fuze and at the base to accept the fin assembly. The body is filled with Composition B high explosive.

Functioning:

When the cartridge is loaded, it slides down the mortar tube until the percussion primer in the ignition cartridge strikes the firing pin in the base cap of the mortar. The flash from the primer ignites the ignition cartridge, and the cartridge ignites the propellant charge. Rapidly expanding gases from the burning propellant expel the projectile from the mortar tube and propel it to the target. The projectile is fin-stabilized in flight. The point-detonating fuze functions on impact, detonating the fuze booster charge and, in turn, the high explosive charge. The high explosive charge shatters the projectile

body, producing near optimum fragmentation and blast effect at the target.

Difference Between Models:

The projectile body of the M49A2 is of forged steel, and is filled with flaked TNT.

Tabulated Data:

Complete round:
- Type----------HE
- Weight w/fuze----------3.07 lb
- Length w/fuze----------9.61 in.

Projectile:
- Body material:
  - M49A3----------Cast PMI
  - M49A2----------Forged steel
- Color----------Olive drab w/yellow markings
- Filler and weight:
  - M49A3----------Comp B, 0.42 lb
  - M49A2----------TNT, 0.34 lb
- Components:
  - Ignition cartridge-----M5A1
  - Propellant charge------M3A1
  - Percussion primer------M32
  - Fin assembly----------M2
  - Fuze----------PD, M525 series PD, M717

Temperature Limits:

Firing:
- Lower limit---------- -40°F (-40°C)
- Upper limit---------- +125°F (+52.0°C)

Storage:
- Lower limit---------- -80°F (for period not more than 3 days) (-62.2°C)
- Upper limit---------- +160° (for period not more than 4 hr/day) (+71.1°C)

*Packing: One round in fiber container; 10 containers in wooden box.

*Packing Box:
- Weight----------49 lb
- Dimensions----------17-9/16 x 12-1/8 x 8-7/32 in.
- Cube----------1.3 cu ft

*NOTE: See SC for complete packing data including NSN's.

Shipping and Storage Data:

Quantity-distance class-------(08) 1.2
Storage compatibility group---E
DOT shipping class----------A
DOT designation----------AMMUNITION FOR CANNON WITH EXPLOSIVE PROJECTILES
DODAC----------1310-B632
Drawing number----------9207925

Ballistics:

Charge	Muzzle Velocity (fps)	Maximum Range (yd)	Maximum Range (mtr)
0*	189	332	303
1	292	784	716
2	377	1204	1101
3	449	1594	1458
4	518	1978	1809

*Charge 0 is the ignition cartridge only; Charge 1 is the ignition cartridge and one increment charge; Charge 4 is the ignition cartridge and 4 increment charges.

Limitations:

Although this cartridge is safe for firing at standard temperatures, excessive pressure may develop at Charge 4 below 0°F. Maximum allowable rate of fire: 30 rounds-per-minute for periods not exceeding one minute; 18 rounds-per-minute for periods not exceeding 4 minutes: 8 rounds-per-minute indefinitely.

References:

FM 23-85
SC 1305/30-IL
TM 9-3071-1
TM 9-1015-215-12

CARTRIDGE, 60 MILLIMETER: HE, M49A5 (M49A4E1)

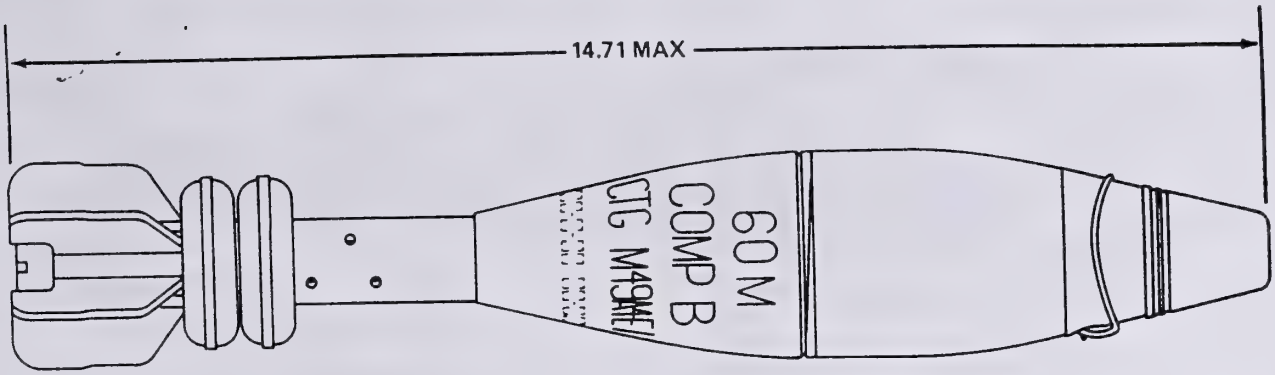

AR199514

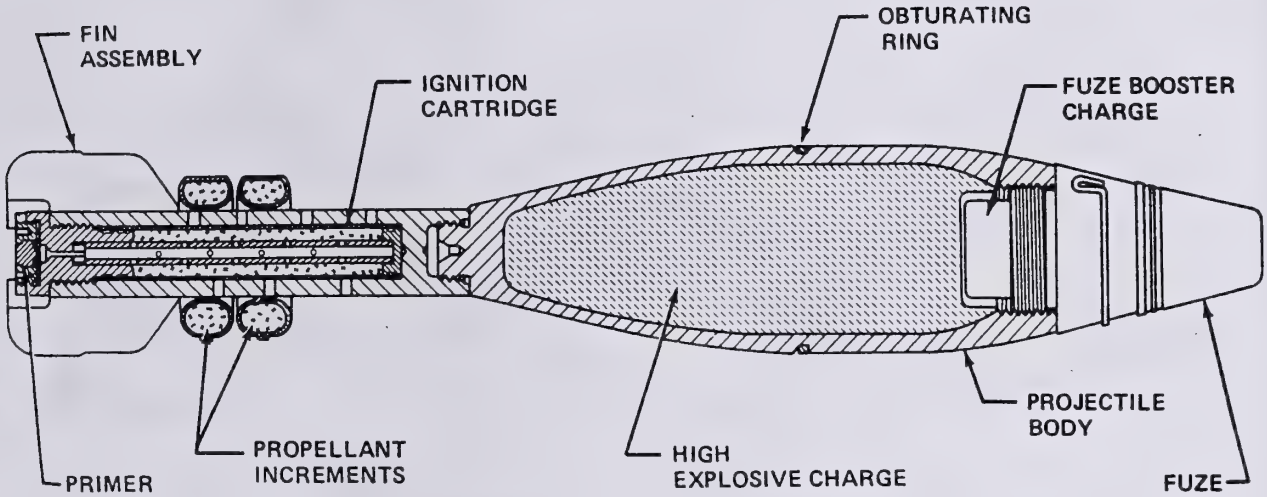

AR199513

Type Classification:

Use:

This cartridge is used against personnel and light materiel, providing both fragmentation and blast effect.

Description:

The complete round consists of a projectile body, a fin assembly, two increments of propellant charge, and an ignition cartridge with a percussion primer. The alloy steel projectile body is internally threaded at the nose to accept the fuze, externally threaded at the base to accept the fin assembly, and grooved to hold the Delrin obturating ring. The body is loaded with Composition B high explosive.

Functioning:

When the cartridge is loaded, it slides down the mortar tube until the percussion primer in the ignition cartridge strikes the firing pin in the base cap of the mortar. The flash from the primer ignites the ignition cartridge, and the cartridge ignites the propellant charge. Rapidly expanding gases from the burning propellant expel the projectile from the mortar tube and propel it to the target. The projectile is fin-stabilized in flight. The point-detonating fuze functions on impact, detonating the fuze booster charge and, in turn, the Composition B high explosive. The bursting charge shatters the projectile body, producing near optimum fragmentation and blast effect at the target.

Tabulated Data:

Complete round:
- Type----------HE
- Weight w/fuze----------3.90 lb
- Length w/fuze----------14.71 in.
- Cannon used with----------M19

Projectile:
- Body material----------Alloy steel
- Color----------Olive drab w/yellow markings
- Filler and weight----------Comp B, 0.79 lb

Components:
- Ignition cartridge---------XM702
- Propellant charge----------XM204
- Percussion primer----------M35
- Fin assembly----------XM25
- Fuze----------PD, XM935

Temperature Limits:

Firing:
- Lower limit---------- -40°F (-40°C)
- Upper limit---------- +125°F (+52.0°C)

Storage:
- Lower limit---------- -65°F (for period not more than 3 days) (-53.8°C)
- Upper limit---------- +160°F (for period not more than 4 hr/day) (+71.1°C)

*Packing----------1 round in fiber container; 8 containers in metal box; 2 metal boxes in wirebound box

*Packing Box:
- Height----------100 lb
- Dimensions----------
- Cube----------2.0 cu ft

*NOTE: See SC for complete packing data including NSN's.

Shipping and Storage Data:

Quantity-distance class-------(08) 1.2
Storage compatibility group---E
DOT shipping class----------A
DOT designation----------AMMUNITION FOR CANNON WITH EXPLOSIVE PROJECTILES
DODAC----------1310-
Drawing number----------9241292

References:

DEP 9-1310-522-12
FM 23-85
SC 1305/30-IL
TM 9-3071-1
TM 9-1015-215-12

CARTRIDGE, 60 MILLIMETER: TARGET PRACTICE, M50A3 (M50A2E1)

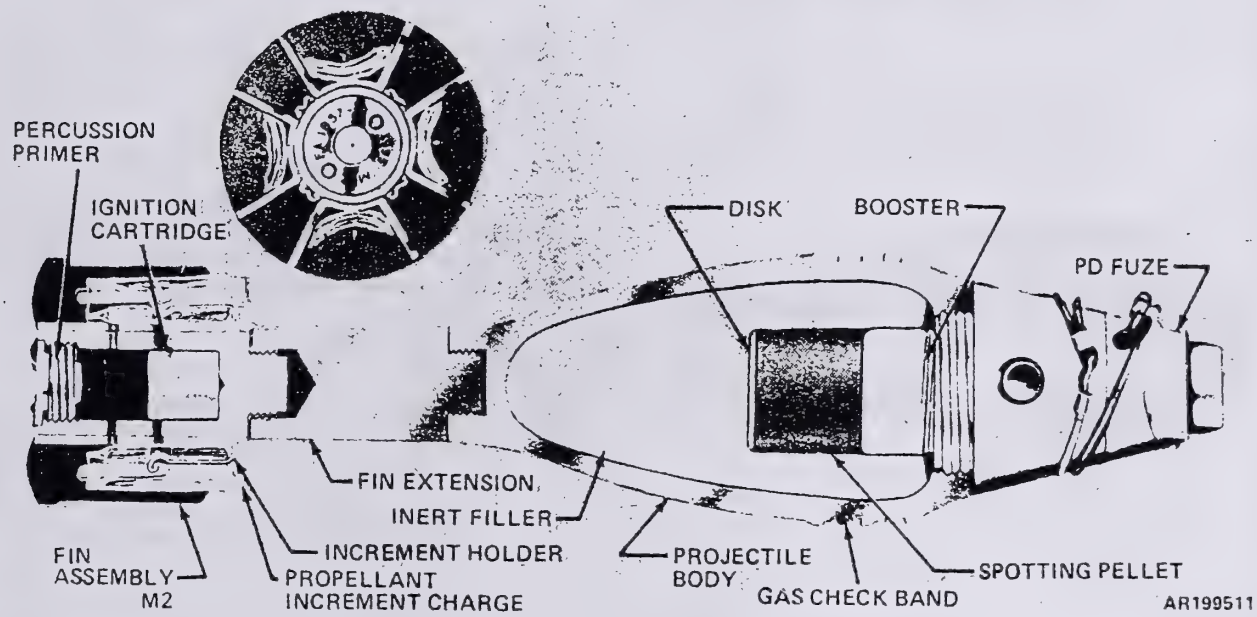

Type Classification:

C & T AMCTC 6632, dtd 1969.

Use:

This cartridge is fired in 60mm Mortars M2 and M19 for target practice, and contains a spotting charge for observation.

Description:

The complete round consists of a projectile body, a point-detonating fuze, a fin assembly with a 2-in. extension, four increments of propellant charge, and an ignition cartridge with a percussion primer. The projectile body is of forged steel or pearlitic malleable iron (PMI), and is threaded internally at the nose to accept the fuze and at the base to accept the fin extension. The body is loaded with an inert plaster filler to simulate the weight and ballistic characteristics of a high explosive cartridge. A pellet of black powder for a spotting charge is loaded in a cavity just below the booster casing of the fuze.

Functioning:

When the cartridge is loaded, it slides down the mortar tube until the percussion primer in the ignition cartridge strikes the firing pin in the base cap of the mortar. The flash from the primer ignites the ignition cartridge, and the cartridge ignites the propellant charge. Rapidly expanding gases from the burning propellant expel the projectile from the mortar tube and propel it to the target. The projectile is

fin-stabilized in flight. The point-detonating fuze functions on impact, detonating the fuze booster charge and the spotting charge.

Tabulated Data:

Complete round:
- Type----------TP
- Weight w/fuze----------03.15 lb
- Length w/fuze----------11.61 in.

Projectile:
- Body material----------Forged steel or cast PMI
- Color----------Blue w/white markings and brown band
- Filler and weight----------Inert, 0.29 lb
- Spotting charge----------Black powder, 0.55 lb

Components:
- Ignition cartridge---------M5A1
- Propellant charge----------M181
- Percussion primer----------M32
- Fin assembly----------M2 plus extension
- Fuze----------PD, M525 series

Temperature Limits:

Firing:
- Lower limit---------- -40°F (-40°C)
- Upper limit---------- +125°F (+52.0°C)

Storage:
- Lower limit---------- -80°F (for period not more than 3 days) (-62.2°C)
- Upper limit---------- +160°F (for period not more than 4 hr/day) (+71.1°C)

*Packing ----------1 round in fiber container; 10 containers in wooden box

*Packing Box:
- Weight----------49.0 lb
- Dimensions----------17-9/16 x 12-1/8 x 8-7/32 in.
- Cube----------1.3 cu ft

*NOTE: See SC for complete packing data including NSN's.

Shipping and Storage Data:

Quantity-distance class-------(08) 1.2
Storage compatibility group---E
DOT shipping class----------A
DOT designation----------AMMUNITION FOR CANNON WITH EXPLOSIVE PROJECTILES
DODAC----------1310-B633
Drawing number----------9220383

Ballistics:

Charge	Muzzle Velocity (fps)	Maximum Range (yd)	Maximum Range (mtr)
0*	169	280	256
1	247	700	639
2	373	1163	1069
3	450	1587	1452
4	520	1963	1814

*Charge 0 is the ignition cartridge only; Charge 1 is the ignition cartridge and one increment charge; Charge 4 is the ignition cartridge and 4 increment charges.

Limitations:

Excessive short rounds may occur when this round is fired at temperatures below 0°F. Maximum allowable rate of fire: 30 rounds-per-minute for periods not exceeding 1 minute; 18 rounds-per-minute for periods not exceeding 4 minutes; 8 rounds-per-minute indefinitely.

References:

SC 1305/30-IL
TM 9-3071-1
TM 9-1015-215-12

CARTRIDGE, 60 MILLIMETER: TRAINING, M69

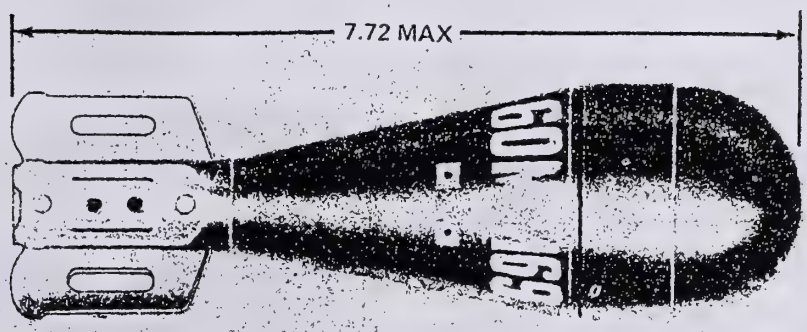

AR199510

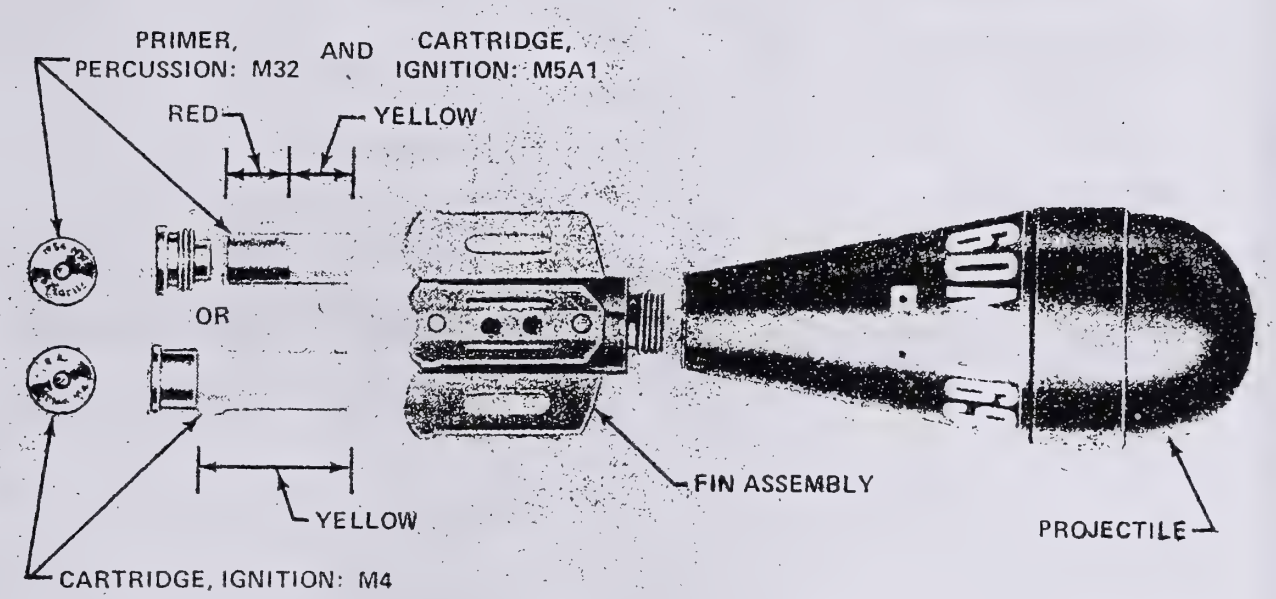

AR199509

Type Classification:

Std OTCM 37119, dtd 1959.

Use:

This cartridge is used for training in the loading and firing of 60mm Mortars M2 and M19.

Description:

Unlike other mortar ammunition, the components of this round are issued separately. This facilitates replacement of damaged, worn, or expended parts. The complete round consists of an inert projectile, a fin assembly, an ignition cartridge, and a percussion primer. The pear-shaped, cast iron projectile has no provision for a fuze, and is internally threaded at the base to accept the fin assembly.

Functioning:

When the cartridge is loaded, it slides down the mortar tube until the percussion primer in the ignition cartridge strikes the firing pin in the base cap of the mortar. The primer detonates the ignition cartridge. Since this round is fired only at Charge 0, the gases from the ignition cartridge expel the projectile from the mortar tube and propel it to the target. The projectile is fin-stabilized in flight. Since the cartridge is inert, there is no detonation upon impact, and the cartridge may be recovered for reuse.

Tabulated Data:

Complete round:
- Type----------Training
- Weight assembled----------4.43 lb
- Length assembled----------7.72 in.

Projectile:
- Body material----------Cast iron
- Color:
  - Old mfg----------Black or blue w/ white markings
  - New mfg ----------Bronze w/white markings
- Filler and weight----------Inert

Components:
- Ignition cartridge---------M5A1 or M4 (complete)
- Propellant charge----------None
- Percussion primer----------M32
- Fin assembly----------M5 (or modified M2)
- Fuze----------None

Temperature Limits:

Firing:
- Lower limit---------- -40°F (-40°C)
- Upper limit---------- +125°F (+52.0°C)

Storage:
- Lower limit---------- -80°F (for period not more than 3 days) (-62.2°C)
- Upper limit---------- +160°F (for period not more than 4 hr/day) (+71.1°C)

*Packing ----------A training kit used in the field holds 10 training cartridges and accessories

*Packing Box:
- Weight----------65 lb
- Dimensions----------21-7/16 x 18-5/16 x 7-27/32 in.
- Cube----------1.4 cu ft

*NOTE: See SC for complete packing data including NSN's.

Shipping and Storage Data:

Quantity-distance class-------N/A
Storage compatibility group---N/A
DOT shipping class----------N/A
DOT designation----------AMMUNITION FOR CANNON WITH INERT PROJECTILES
DODAC----------1310-B629
Drawing number----------9222994

Ballistics:

Charge----------0
Muzzle velocity----------46.4 mps (152.24 fps)
Maximum range----------193 mtr (211.14 yd)

Limitations:

This round is to be fired at Charge 0 only.

References:

SC 1305/30-IL
TM 9-3071-1
TM 9-1015-215-12

CARTRIDGE, 81MM: MORTAR TRAINING DEVICE, 81MM SABOT (INERT) M1 AND 22MM SUB-CALIBER PRACTICE CARTRIDGE M744, M745, M746 AND M747

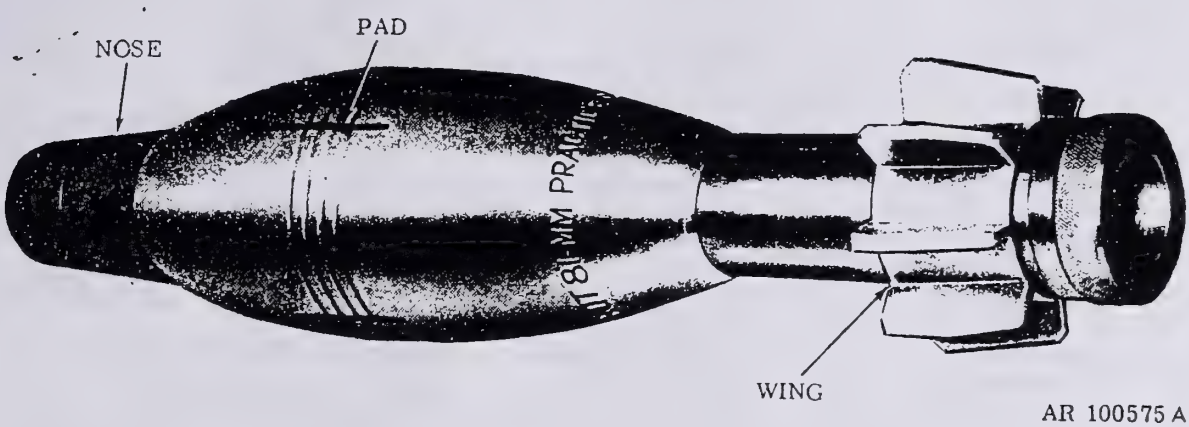

AR 100575 A

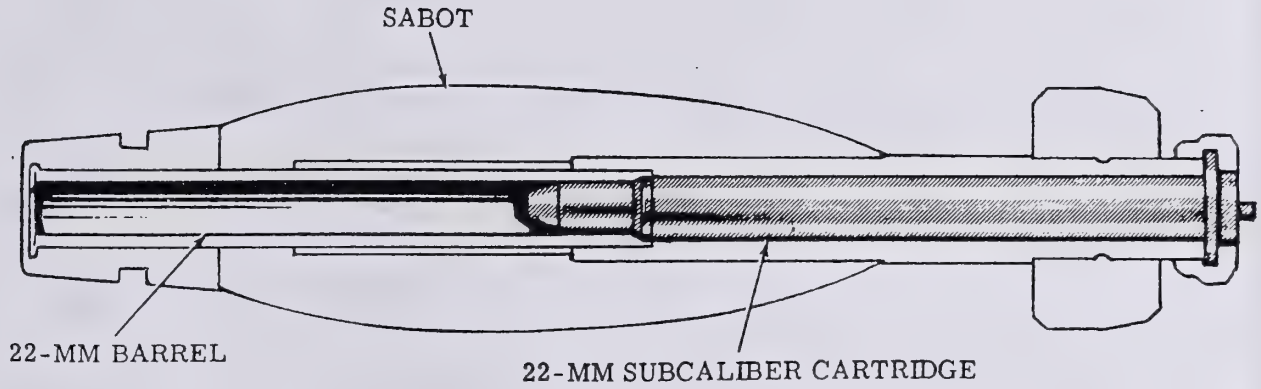

AR 100577 A

Type Classification:

Std MSR 05756032

Use:

The 81mm Sabot (Inert) is a training device for all 81mm Mortars.

Description:

The Sabot is designed to fire a 22mm sub-caliber practice cartridge M744, M745, M746 or M747 (Charges 1, 2, 3, or 4 respectively) as a training device in all model 81mm mortars. The Sabot with 22mm sub-caliber practice cartridges provides realistic mortar firing training at distances which correspond to range firing distances in the ratio of 1 to 10. The sub-caliber device can be fired using standard mortar and sighting and fire control equipment and special firing table in the same manner as standard service mortar ammunition.

The aluminum body Sabot has the bore-reading dimensions and configuration of an 81mm mortar cartridge. It contains an insert 22mm barrel (not rifled) placed longitudinally to receive the 22mm sub-caliber cartridge which is loaded in the magazine just prior to firing. The shaft of the Sabot has stabilizer wings and guide pads to guide the Sabot as it travels up the mortar tube when fired. On firing the loaded Sabot is ejected from the mortar barrel and hits the ground within 1-5 yards (depending upon charge fired) in front of the mortar while the 22mm practice cartridge flies on to its target. The Sabot may be used as a dummy round when

not loaded with a 22mm practice cartridge. The Sabot is rugged and can be reloaded and fired again up to 1000 times for training purposes. It is stored (INERT) in a packing box containing 3 rounds.

22mm Sub-Caliber Practice Cartridge:

The cartridge consists of the projectile with stabilizer fins and cartridge case (divided chambers). The projectile has a steel body flattened at the tip. The wingshaft assembly, press-fit into the projectile body, contains the stabilizer fins (spring steel wrapped around the shaft) to stabilize flight. The wingshaft assembly also serves to seal the base of the projectile body. The projectile body contains the impact fuze and smoke signal charge. The propelling and ejection charges are contained in two separate chambers located in the jet-housing assembly, which is threaded into the base of the cartridge case. A flash tube hole between the chambers permits ignition of the propelling charge by the ejection charge. The cartridges are manufactured in a variety of four propellant charges. Each charge can be identified by notches on the jet screw assembly. One notch designates M744 (charge 1), two notches designate M745 (charge 2), etc.

Functioning:

The protective plastic cap covering the percussion cap of the sub-caliber cartridge must be removed prior to firing. When the practice round is loaded into the Sabot the device is ready for firing. When the Sabot with the sub-caliber cartridge is dropped into the mortar tube, the percussion cap strikes the firing pin of the mortar and is ignited. The percussion cap ignites the ejection charge in the jet housing assembly. The gasses emerge through the axial holes in the jet screw assembly initiating travel of the Sabot and sub-caliber cartridge up the motar tube. Simultaneously the ejection charge ignites the sub-caliber projectile propelling charge, also contained in the jet housing assembly. This propels the sub-caliber projectile out of the cartridge case and through the barrel of the Sabot. As the Sabot leaves the muzzle of the mortar, the sub-caliber projectile clears the barrel of the Sabot. The Sabot impacts the ground within 1-5 yards (depending on charge fired) of the mortar tube, while the subcaliber projectile continues its flight down range.

Tabulated Data:

81mm Sabot:

Type	Practice
Weight	8.5 lbs
Length	15.618 in.
Cannon used	M1, M29, M29A1
Body material	Aluminum/Steel

22mm sub-caliber practice cartridge:

Type	Practice
Weight	1.097 lb
Length w/percussion cap	9.697 in.
Length w/o percussion cap	9.618 in.

Propelling Charge:

Black powder weight:

Charge 1	.03 oz
Charge 2	.04 oz
Charge 3	.06 oz
Charge 4	.08 oz

Temperature Limits:

Firing:

Lower limit	-40°F
Upper limit	+120°F

Storage:

Lower limit	-40°F
Upper limit	+120°F

Packing:

81mm Sabot	3 round/packing box
22mm practice cartridges	1 per polystyrene compartment; 100 cartridges per box

Packing Box:

Sabot

Weight	50 lbs
Demensions	19 x 20 x 6 1/2 in.

Cartridges

Weight	120 lbs
Dimensions	23 x 21 3/4 x 13 3/8 in.
Cube	3.9

Shipping & Storage Data:

Quantity-distance class	1.4
Storage compatibility group	S
DOT Classification	C
DOT Designation	PRACTICE AMMUNITION EXPLOSIVE C

Drawing Numbers.

		DODAC
Sabot 81mm practice M1	9287906 -	N/A*
Cartridge Subcaliber 22mm Practice:		
Charge 1 M744	9287907 -	1305-A680
Charge 2 M745	9287908 -	1305-A681
Charge 3 M746	9287909 -	1305-A682
Charge 4 M747	9287910 -	1305-A683

*Sabot 81mm Practice M1 is a reuseable item DODAC not required

Ballistics.

Muzzle velocity:

Charge 1	148 ft/sec (45 meter/sec)
Charge 2	164 ft/sec (50 meter/sec)
Charge 3	197 ft/sec (60 meter/sec)
Charge 4	230 ft/sec (70 meter/sec)

Maximum effective range:

Charge 1	639 ft (195 meter)
Charge 2	770 ft (235 meter)
Charge 3	1082 ft (330 meter)
Charge 4	1427 ft (435 meter)

References:

TM 9-1015-200-12
TM 9-1300-251-20
TM 1315-249-12&P

CARTRIDGE, 81-MILLIMETER: TARGET PRACTICE, M43A1

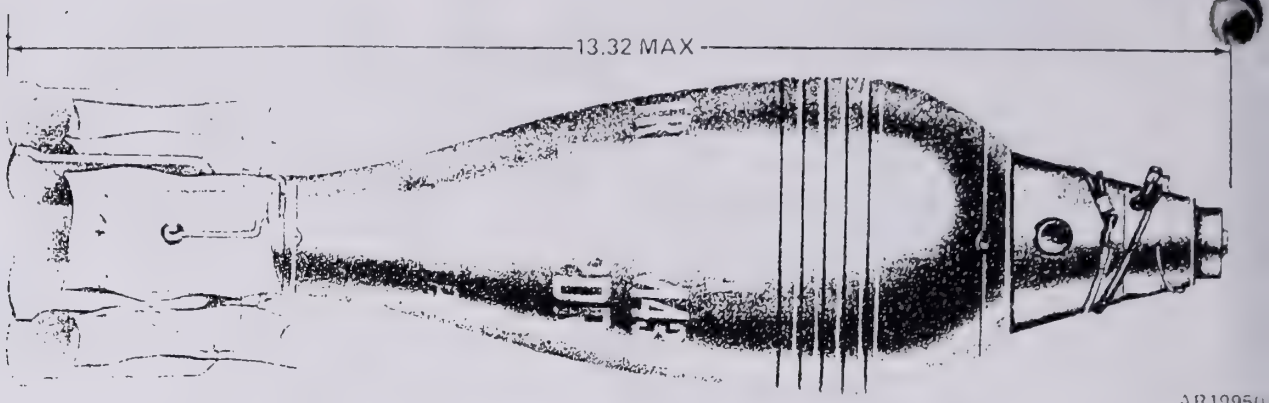

AR19950

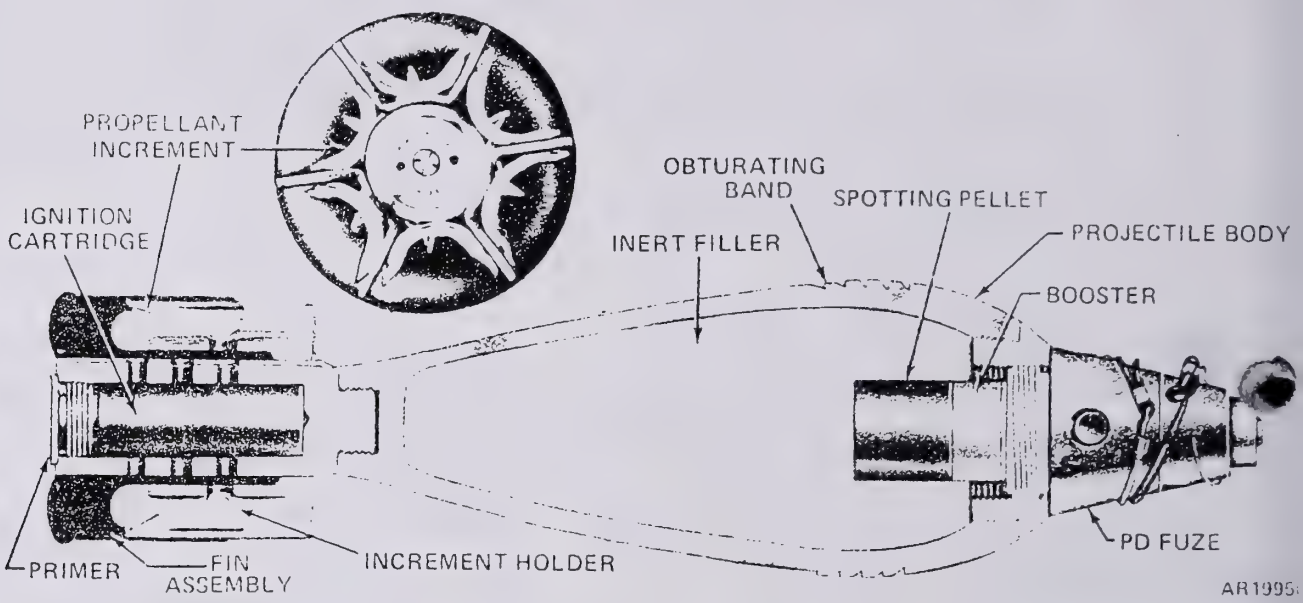

AR1995

Type Classification:

C&T AMCTC 6267 dtd 1968

Use:

This cartridge is used for target practice and contains a spotting charge for observation.

Description:

The complete round consists of a projectile body, a PD fuze, a fin assembly, a propellant charge, an ignition cartridge, and a percussion primer. The projectile body is of forged steel, and is threaded internally at the nose to accept the fuze and at the base to accept the fin assembly. The body is loaded with an inert plaster filler to simulate the weight and ballistic characteristics of a high explosive cartridge. A pellet containing a spotting charge of black powder is loaded in a cavity just below the booster charge of the fuze.

Functioning:

When the cartridge is loaded, it slides down the mortar tube until the percussion primer in the ignition cartridge strikes the firing pin in the base cap of the mortar. The primer detonates the ignition cartridge, the cartridge ignites the propellant charge, and gases from the propellant charge expel the projectile and propel it to the target. The projectile is fin-stabilized in flight. The PD fuze functions on impact, detonating the fuze booster charge and the spotting charge.

Difference Among Models:

One series has a modified fuze in which the tetryl booster charge has been replaced with a black powder booster charge.

Tabulated Data:

Complete round:
- Type ---------- TP
- Weight ---------- 07.29 lbs.
- Length ---------- 13.32 in.
- Cannon used with ---- M1, M29, M29A1

Projectile:
- Body material ------- Forged steel
- Color:
  - Old ---------- Blue or black w/ white markings
  - New ---------- Blue w/white markings
- Filler and weight ---- Inert, 1.29 lbs.
- Spotting charge ------ BP, 24.8 ±1.5 grams

Components:
- Ignition cartridge ---- M8
- Propellant charge ---- M1A1
- Percussion primer ---------- M34
- Fin assembly ------- M3
- Fuze ---------- PD, M52A1B1

Temperature Limits:

Firing:
- Lower limit -------- -40°F
- Upper limit -------- +125°F

Storage:
- Lower limit -------- -80°F (for period not more than 3 days)
- Upper limit ------- +160°F (for period not more than 4 hrs/day)

*Packing ---------- 1 round in fiber container; 4 fiber containers in wooden box.

*Packing Box:
- Weight ---------- 49.8 lbs
- Dimensions ------- 17-3/4 x 9-11/16 x 10-15/32 in.
- Cube ---------- 1.0 cu ft

*NOTE: See SC for complete packing data including NSN's.

Shipping and Storage Data:

- Quantity-distance class ---------- 4
- Storage compatibility group ---------- E
- DOT shipping class ----- A
- DOT designation ------- AMMUNITION FOR CANNON WITH EXPLOSIVE PROJECTILES
- DODAC ---------- 1315-C227
- Drawing number ------- 75-1-89

Ballistics:

Charge	Muzzle Velocity (fps)	Maximum Range (meters)	(yds)
0*	238	517	565
1	351	1024	1111
2	443	1511	1649
3	519	1947	2120
4	590	2349	2560
5	656	2700	2950
6	719	3016	3290
7	779	3292	3590
8	834	3701	4050

*Charge O is the ignition cartridge only; Charge 1 is the ignition cartridge and one increment charge; Charge 8 is the ignition cartridge and eight increment charges.

References:

AMCP 700-3-3
SB 700-20
SC 1305/30-IL
TM 9-3071-1
TM 9-1015-200-12
TM 9-1300-251-20

CARTRIDGE, 4.2-INCH: HE, M3A1 & M3

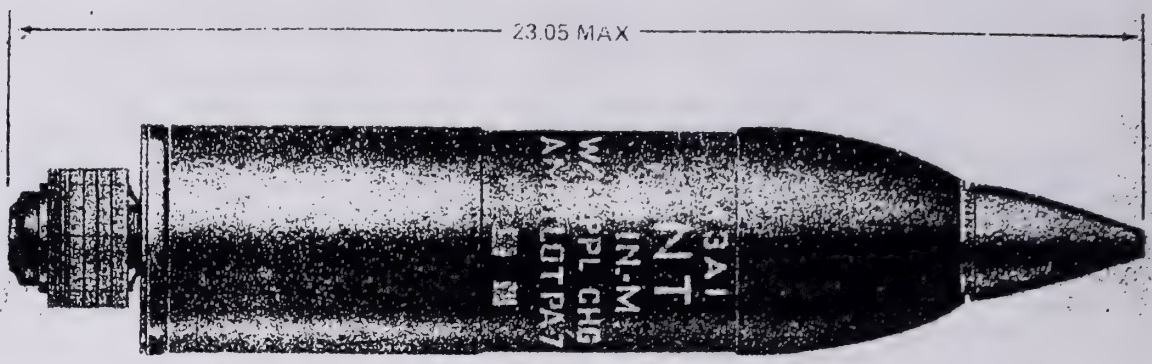

AR199464

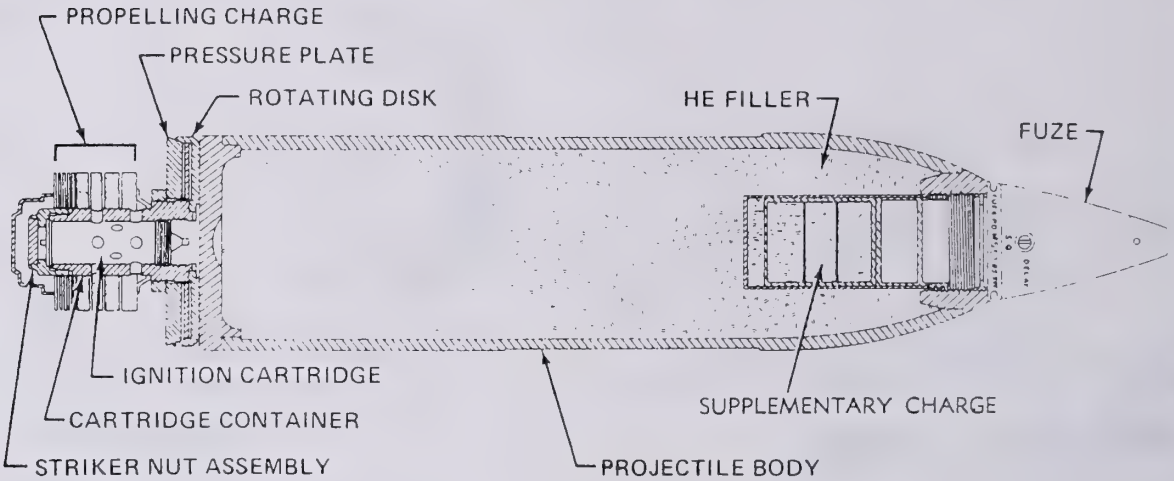

AR199463

Type Classification:

OBS 11756003

Use:

This cartridge is used against personnel and materiel, providing both fragmentation and blast effect.

Description:

The complete round consists of a projectile body, a fuze, and a tail assembly. The steel body is designed to accommodate an impact, delay, or proximity fuze. A deep fuze well in the nose, is fitted with a supplementary charge of TNT. This charge is removed to accommodate certain proximity fuzes. The tail assembly consists of a pressure plate and rotating disc, a propelling charge, a cartridge container and ignition cartridge, and a striker nut assembly.

Functioning:

When the cartridge is released, it slides down the mortar tube until the percussion primer strikes the firing pin. The flash from the primer ignites the ignition cartridge which, in turn, ignites the propelling-charge. The gases from the propelling charge exert pressure on the pressure plate at the base of the projectile which expands the rotating disc, engaging it in the rifling of the tube. The spin imparted to the projectile as it leaves the weapon stabilizes it in flight. The functioning of the fuze detonates the supplementary charge (when used) and the high explosive charge. Depending on

the type of fuze used, the projectile bursts either over or on the target producing near optimum fragmentation and blast effect.

Difference between Models:

The fuze well on the M3 cartridge is designed to accommodate the burster tube of the M9 fuze. In addition, the physical dimensions of the two models are slightly different.

Tabulated Data:

Complete round:
- Type ---------- HE
- Weight ---------- 26.20 lb
- Length ---------- 23.05 in.
- Cannon used with ------ M2, M30

Projectile:
- Body material ---------- Steel
- Color ---------- Olive drab w/yellow markings
- Filler and weight ------ TNT, 7.80 lb
- Supplementary charge ---------- TNT, 0.365 lb

Components:
- Ignition cartridge ----- M2*
- Propelling charge ------ M6*
- Fuze:
  - M3 ---------- PD, M9
  - M3A1 ---------- PD, M557, MTSQ, M520 series, M564; Prox. M513 series

*NOTE: See separate data sheets.

Performance (full charge):
- Maximum range ---------- 5043 yd (4,610 mtr)
- Muzzle velocity -------- 845 fps (258 mps)

Temperature Limits:

Firing:
- Lower limit -------- -40°F (-40°C)
- Upper limit -------- +125°F (+52.0°C)

Storage:
- Lower limit -------- -80°F (-62.2°C) (for period not more than 3 days)
- Upper limit -------- +160°F (+71.1°C) (for period not more than 4 hr/day)

*Packing ---------- 1 round in fiber container; 2 fiber containers in wooden box

*Packing Box:
- Weight ---------- 76 lb
- Dimensions ---------- 31-5/16 x 11-13/16 x 7-3/8 in.
- Cube ---------- 1.6 cu ft

*NOTE: See SC for complete packing data including NSN's.

Shipping and Storage Data:

- Quantity-distance class ---------- 1.1
- Storage compatibility group ---------- E
- DOT shipping class ----- A
- DOT designation -------- AMMUNITION FOR CANNON WITH EXPLOSIVE PROJECTILES
- DODAC ---------- 1315-C704
- Drawing number --------- 75-1-285

Limitations:

Minimum charge for firing Cartridge M3A1 with a proximity fuze is 10 increments.

References:

SC 1305/30-IL
TM 9-1015-215-12
TM 9-1300-251-20
TM 9-1320-241-12

CARTRIDGE, 90-MILLIMETER: HEAT, M371A1

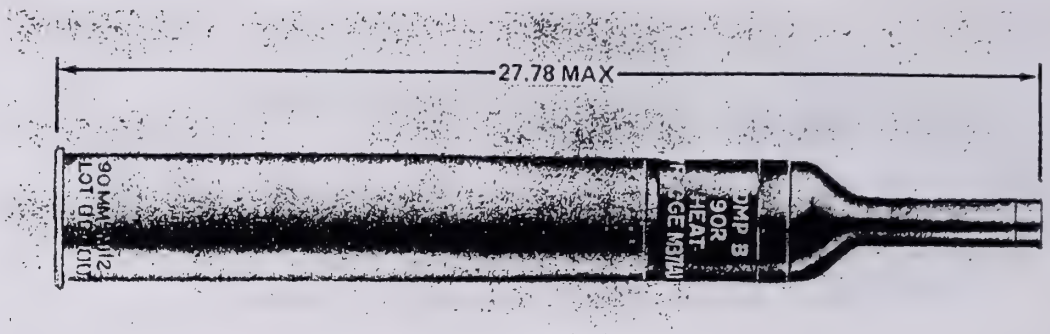

AR199759

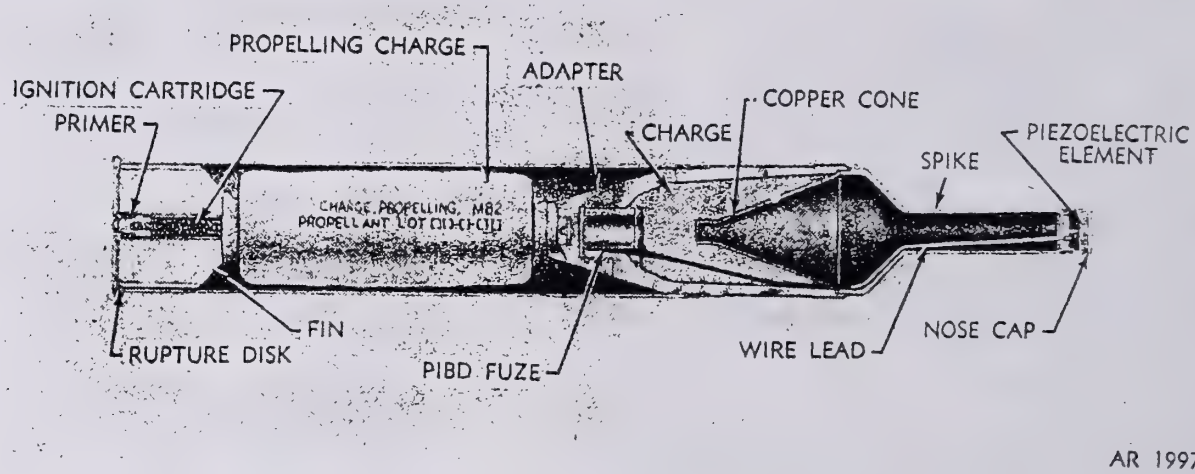

AR 199758

Type Classification:

Std. AMCTC 4265 dtd 1966

Use:

This cartridge is used in 90-mm recoilless rifles and is intended primarily for defeat of armor. There is also some limited effectiveness against fixed targets and personnel through blast and fragmentation.

Description:

The cartridge consists of an aluminum cartridge case and a steel projectile containing a shaped charge of high explosive. A percussion primer with a black powder ignition cartridge is assembled to the base of the round. A rupture disk is held in place in the base of the cartridge case by the primer. The propelling charge is contained in a bag installed around the fin assembly which contains the primer ignition cartridge. The projectile has a standoff spike, containing a piezoelectric element and a paper insulating cup, which is threaded to the body. An internal copper cone shapes the charge. The point initiating, base detonating fuze is contained in an adapter threaded to the base. The adapter is threaded to the fin assembly. The fins provide in-flight stability.

Functioning:

The primer ignites the propelling charge when struck by the firing pin of the weapon. The burning propellant generates rapidly expanding gases to propel the projectile out of the barrel and to the required velocity. Recoil is minimized by blowout of the rupture disk and controlled pressure relief through apertures in the breechblock. The projectile is stabilized in flight by the tail fins. On impact, crushing of the piezoelectric unit triggers the fuze. The standoff spike provides the optimum distance from the target surface for explosion of the shaped charge. The detonation collapses the copper cone and creates a focussed, high velocity shock wave. The intensity of the shock wave causes failure of the target armor, and a jet of metal particles penetrates the interior.

Tabulated Data:

Complete round:
- Type ---------- HEAT
- Weight with fuze ---- 9.25 lbs.
- Length ---------- 27.78 in.
- Cannon used with --- M67

Projectile:
- Body material ------ Steel and aluminum
- Color:
  - Old mfg. -------- Olive drab w/yellow markings
  - New mfg. -------- Black w/yellow markings
- Filler and weight ---------- Comp B, 1.72 lbs.

Components:
- Cartridge case ----- M112
- Propelling charge --- M82
- Primer:
  - M371A1 --------- M92A1
  - M371 ---------- M78
- Fuze ---------- PIBD, M530A1, M530

Performance:
- Maximum range ---- 400 meters
- Muzzle velocity ----- 213 mps.

Temperature Limits:
- Firing:
  - Lower limit ---- - 40°F
  - Upper limit ----- + 125 F
- Storage:
  - Lower limit ---- - 80°F (for not more than 3 days)
  - Upper limit ---- + 160°F (for not more than 4 hrs./day)

*Packing ---------- 1 round in fiber container; 1 container in wooden box

*Packing Box:
- Weight ---------- 42 lbs.
- Dimensions ---------- 32-15/16 x 9-7/8 x 6-3/8 in.
- Cube ---------- 1.3 cu. ft.

*NOTE: See SC for complete packing data including NSN's.

Shipping and Storage Data:

- Quantity-distance class ---------- 5
- Storage compatibility group ---------- E
- DOT shipping class ---- A
- DOT designation ------- AMMUNITION FOR CANNON WITH EXPLOSIVE PROJECTILES.
- DODAC ---------- 1315-C282
- Drawing number ------ 8863468

References:

- SC 1305/30-IL
- SB 700-20
- AMCP 700-3-3
- TM 9-1015-223-12
- TM 9-1300-251-20

CARTRIDGE, 90-MILLIMETER: PRACTICE, M371

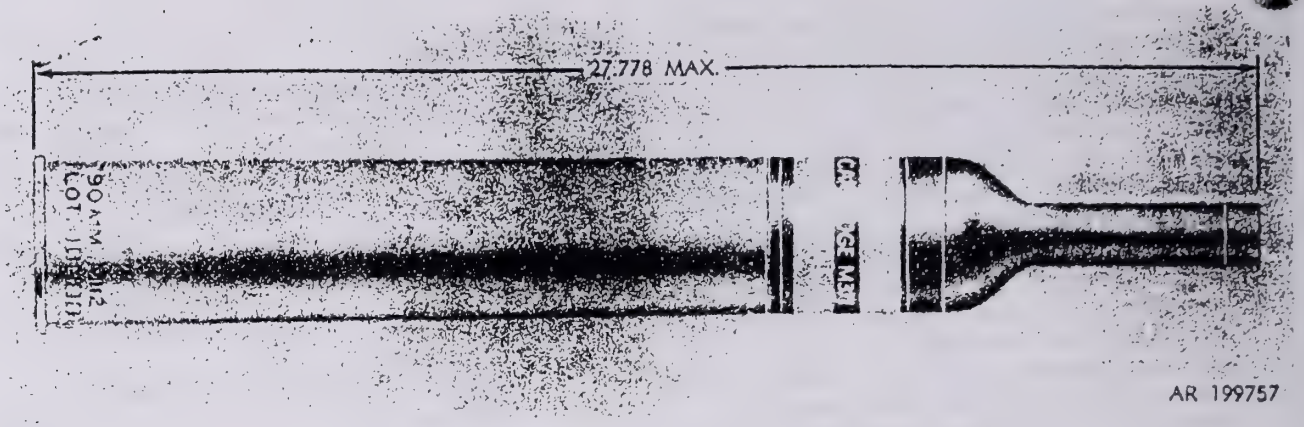

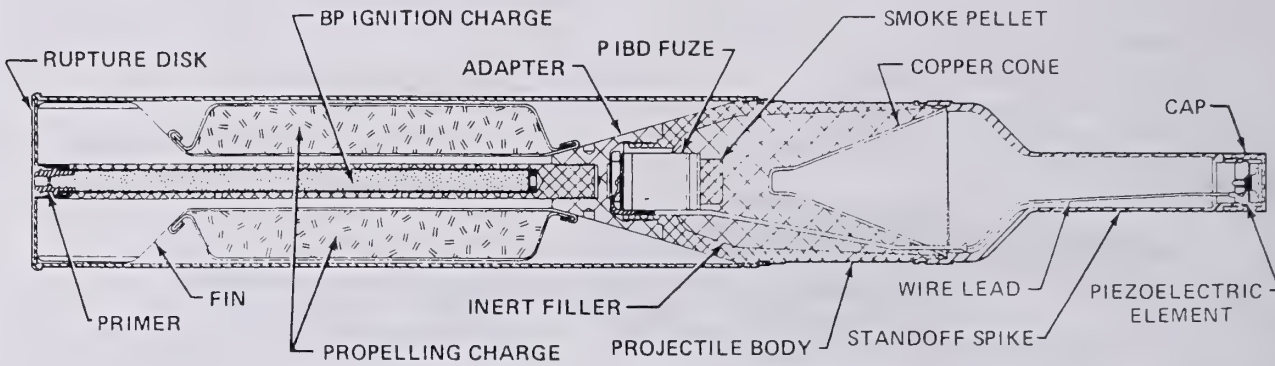

Type Classification:

Std OTCM 37136 dtd 1959

Use:

This cartridge is used to train personnel armed with the 90-mm recoilless rifles in handling and use of HEAT rounds.

Description:

The cartridge resembles 90-mm HEAT round M371A1 and has similar ballistic characteristics, except that the high explosive filler is replaced with inert material of the same weight. A standoff spike with piezoelectric element in the nose cap is threaded to the nose of the projectile, and an adapter and fin are threaded to the base. The point initiating, base detonating fuze is housed in the adapter and a smoke pellet is installed immediately ahead of the fuze. A copper cone in the projectile shapes the inert filler to maintain a ballistic match with the service round. The bagged propellant in the cartridge case surrounds the fin. The base of the cartridge case holds a percussion primer and a rupture disk. The black powder ignition charge of the primer is contained within the fin.

Functioning:

When the firing pin of the weapon strikes the primer, it ignites the propelling charge. The burning propellant generates rapidly expanding gases to propel the projectile out of the barrel and to the target. The fin stabilizes the projectile in flight. On impact, distortion of the piezoelectric element induces an electric current to function the PIBD fuze and ignite the smoke pellet for marking.

Tabulated Data:

Complete round:
- Type ---------- Practice
- Weight ---------- 9.25 lbs.
- Length ---------- 27.778 in.
- Cannon used with ---- M67

Projectile:
- Body material ------- Aluminum alloy
- Color ---------- Blue or black w/white markings
- Filler and weight ---- Inert E, 1.79 lbs. Pellet Mox 2B

Components:
- Cartridge case ------ M112
- Propelling charge --- XM82
- Primer ---------- XM92

Fuze ---------- PIBD, M530

Performance:
- Effective range ------ 400 m.
- Muzzle velocity ----- 213 mps.

Temperature Limits:
- Firing:
  - Lower limit ----- - 40° F
  - Upper limit ----- + 125° F
- Storage:
  - Lower limit ----- - 80° F (for periods not more than 3 days)
  - Upper limit ----- + 160° F (for periods not more than 4 hrs./day)

*Packing ---------- 1 round in fiber container; 2 containers in wooden box

*Packing Box:
- Weight ---------- 47 lbs.
- Dimensions ---------- 32-15/16 x 9-7/8 x 6-3/8 in.
- Cube ---------- 1.3 cu. ft.

*NOTE: See SC for complete packing data including NSN's.

Shipping and Storage Data:

- Quantity-distance class ---------- 5
- Storage compatibility group ---------- E
- DOT shipping class ----- A
- DOT designation -------- AMMUNITION FOR CANNON WITH EXPLOSIVE PROJECTILES
- DODAC ---------- 1315-C283
- Drawing number ------- 8865243

References:

SC 1305/30-IL
SB 700-20
AMCP 700-3-3
TM 9-1015-223-12
TM 9-1300-251-20

CARTRIDGE, 106 MILLIMETER: HEAT, M344A1 AND M344

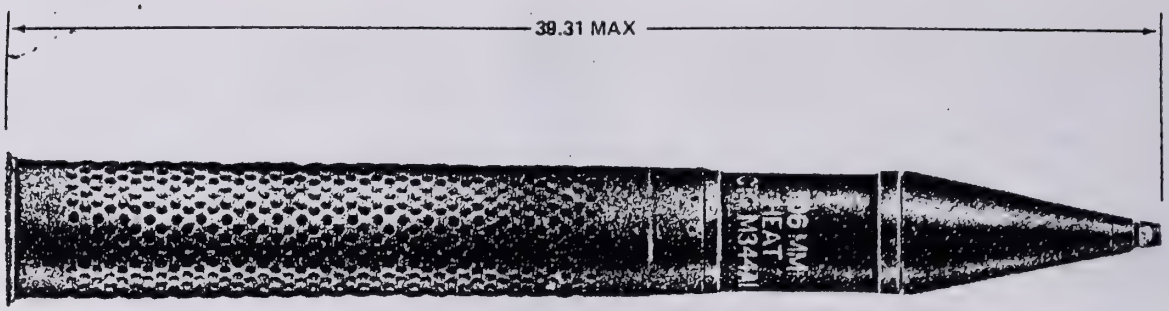

AR199753

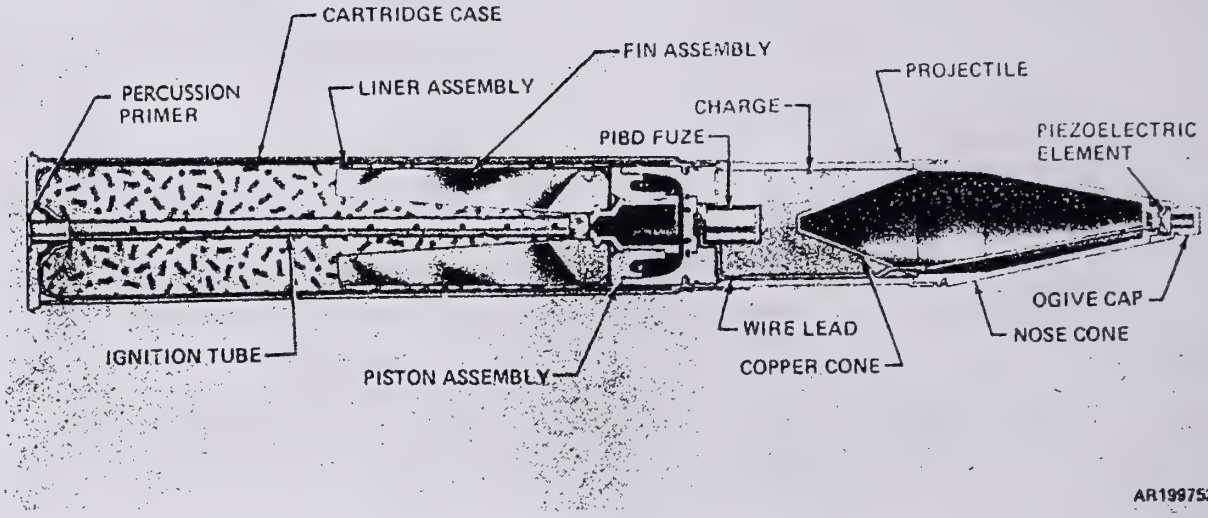

AR199752

Type Classification:

Std OTCM 3711959, dtd 1958

Use:

This cartridge is used in 106mm recoilless rifles against armored targets.

Description:

The cartridge consists of a perforated, plastic-lined steel cartridge case crimped to a steel projectile containing a shaped charge. The nose cone adapter of the projectile carries a cap with a piezoelectric element to initiate the PIBD fuze in the base. A copper cone within the projectile shapes the charge. The hollow space within the cone and the adapter provides the appropriate standoff distance between target and shaped charge. An aluminum chamber threaded to the base of the projectile supports the fuze, six folding fins, and a piston assembly for opening the fins. The cartridge case is loosely filled with propellant, and the base is fitted with a percussion primer. The ignition tube of the primer extends through the propelling charge.

Functioning:

The primer ignites the propelling charge when struck by the firing pin. The burning propellant generates rapidly expanding gases to propel the projectile through the barrel and to the target. Recoil is eliminated by controlled

escape of propellant gases to the rear through openings in the breechblock. Gas pressure also builds up in the piston in the projectile base. When the projectile leaves the muzzle, the piston moves rearward to extend the fins for stability in flight. On impact, distortion of the piezoelectric element generates an electrical charge and initiates fuze functioning to detonate the projectile. Explosion of the shaped charge collapses the copper cone and focuses a high velocity shock wave and a jet of metal particles that penetrates the target.

Difference Between Models:

M344 has a propelling charge of 8.1 lb M10, and the design of the projectile charge-shaping cone is different from M344A1.

Tabulated Data:

Complete round:	
Type	HEAT
Weight	37.23 lb
Length	39.31 in.
Cannon used with	M40A1, M40A1C
Projectile:	
Body material	Steel
Color:	
Old mfg	Olive drab w/yellow markings
New mfg	Black w/yellow markings
Filler and weight	Comp B, 2.79 lb
Components:	
Cartridge case:	
M344A1	M94B1
M344	M93 or M93B1
Propelling charge	M26 (M344A1); M10 (M344)
Primer	M57
Fuze	PIBD, M509A1
Performance:	
Maximum range	3000 m
Muzzle velocity	502.9 mps

Temperature Limits:

Firing:	
Lower limit	-40°F
Upper limit	+125°F
Storage:	
Lower limit	-80°F (for periods not more than 3 days)
Upper limit	+160°F (for periods not more than 4 hr/day)
*Packing	1 round in fiber container; 2 containers in wooden box
*Packing box:	
Weight	120 lb
Dimensions	45-1/16 x 12-5/8 x 7-11/16
Cube	2.5 cu ft

*NOTE: See SC for complete packing data including NSN's.

Shipping and Storage Data:

Quantity-distance class	5
Storage compatibility group	E
DOT shipping class	A
DOT designation	AMMUNITION FOR CANNON WITH EXPLOSIVE PROJECTILES
DODAC	1315-C650
Drawing number	7549097 (M344A1); 75-1-319 (M344)

References:

SC 1305/30-IL
SB 700-20
DARCOM-P 700-3-3
TM 9-1000-205-12
TM 9-1300-251-20

CARTRIDGE, 40-MILLIMETER: HE, M381

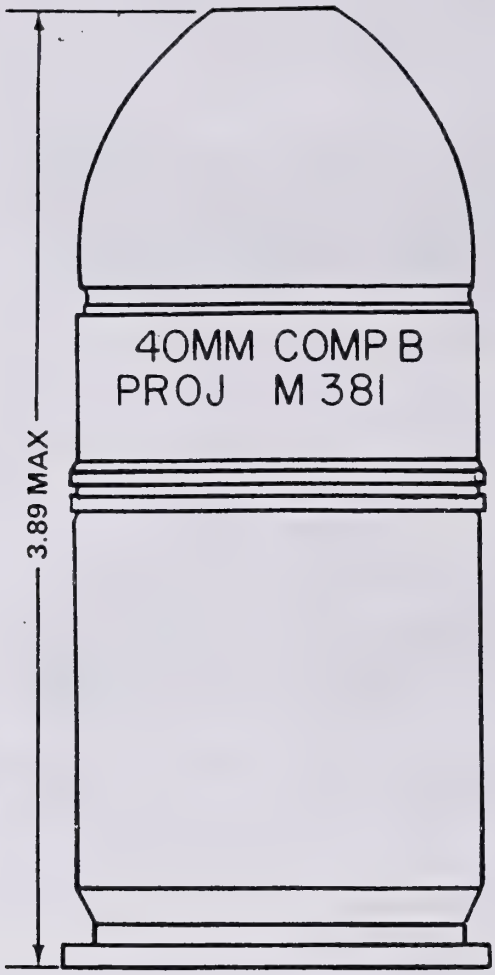

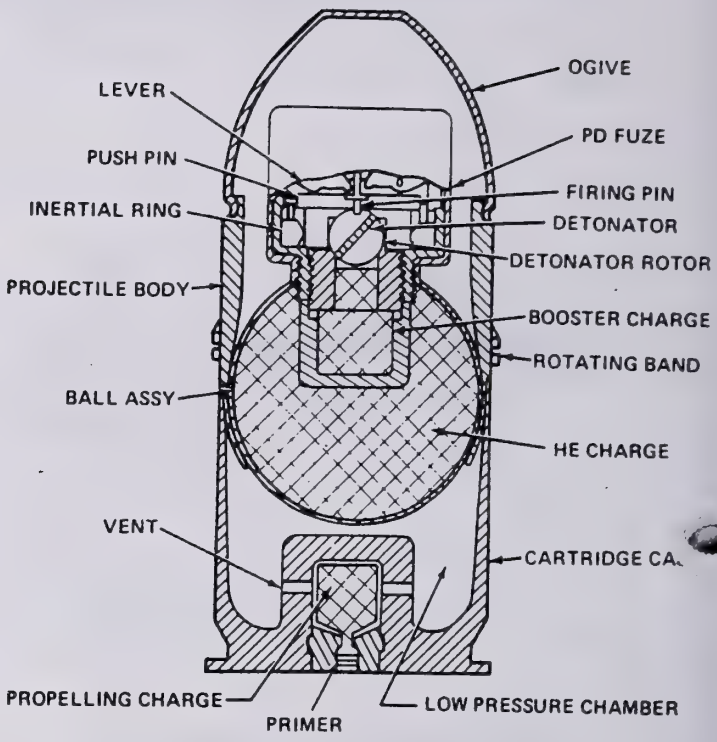

AR199575

AR199576

Type Classification:

Std AMCTC 9392 dtd 1972

Use:

This cartridge is a high explosive round designed to inflict personnel casualties from ground burst effect, and is fired from 40-mm Grenade Launcher M79 or the M203 (attached to the M16/M16A1 rifle).

Description:

The cartridge is a fixed round of ammunition consisting of a projectile assembly and a cartridge case assembly. The projectile has a hollow, one-piece aluminum body containing rotating bands. A hollow aluminum ogive is fitted to the front end of the projectile. A hollow steel ball assembly containing the bursting charge is fitted into the rear of the projectile body. A booster charge with a PD fuze is threaded into a well in the forward side of the ball. The projectile assembly is press-fitted into a cartridge case. The case is a hollow, aluminum bichambered cylinder with an inertial brass propellant cup fitted into the cartridge base. The cup contains the propelling charge with a percussion primer in the center. The cup acts as a high-pressure chamber and the hollow cavity in the case, which surrounds the cup, acts as a low-pressure chamber. The fuze contains an inertial ring operating through push pins and levers upon a detonator.

Functioning:

The weapon firing pin strikes the percussion primer igniting the propelling charge in the high-pressure chamber. The burning propelling charge generates sufficient pressure to rupture the propellant cup forcing the expanding gases through vent holes into the low-pressure chamber. The rotating band around the projectile engages the rifling in the launcher tube to impart spin of 3600 RPM to the projectile. The pressure created by the expanding propellant gases in the low-pressure chamber forces the projectile through the launcher barrel with a muzzle velocity of 76 meters per second (250 fps). Setback force from firing causes the firing pin in the fuze to be withdrawn from the rotor ball detent, and centrifugal force from projectile rotation causes the rotor ball assembly to align the detonator with the explosive train. The fuze arms after the projectile has traveled approximately 2.4 to 3 meters (8 feet) from the launcher. Upon graze or impact with the target, inertia causes the inertial ring to act on the push pins, pivoting the levers inward to force the firing pin into the detonator. The detonator ignites the booster charge, and the booster detonates the explosive charge, producing blast and fragmentation of the projectile body.

Tabulated Data:

Complete round:	
Type	HE
Weight	0.503 lbs
Length	3.89 in.
Weapons used with	40-mm Grenade Launchers M79 and M203 (attached to M16/M16A1 rifle)
Projectile:	
Body material	Aluminum skirt and steel wire ball
Color	Olive drab w/yellow markings & yellow ogive
Filler	Composition B, 32 grams
Fuze	PD, M552
Propelling charge:	
Cartridge case	M118
Propellant	M9, 330 mg.
Primer	Perc., M42
Performance:	
Maximum range	400 meters
Muzzle velocity	76 mps (250 fps)

Temperature Limits:

Firing:	
Lower limit	-45°F (-42.8°C)
Upper limit	+125°F (51.6°C)
Storage:	
Lower limit	-65°F (-53.8°C)
Upper limit	+165°F (73.9°C)
*Packing	6 rounds in bandoleer; 12 bandoleers (72 rounds) per wooden box
*Packing Box:	
Weight	54 lbs. (24.5 kg)
Dimensions	17-3/4 x 14-1/8 x 11-15/32 in. (45.0 x 36.2 x 29.3 cm)
Cube	1.7 cu. ft. (.0475m^3)

*NOTE: See SC for complete packing data including NSN's.

Shipping and Storage Data:

Hazard class/division and Storage compatibility group	(04) 1.2E
UNO Serial Number	0321
DOT Class	Class A Explosive
DOT Marking	AMMUNITION for CANNON w/EXPLOSIVE PROJECTILES
DODAC	1310-B568
Cartridge drawing number	8835941
Packing drawing numbers	8835104, 8835105

References:

SC 1305/30-IL
SB 700-20
TM 9-1005-249-10
TM 9-1010-205-10
TM 9-1010-221-10

CHARGE, PROPELLING, 155-MILLIMETER: M3 SERIES

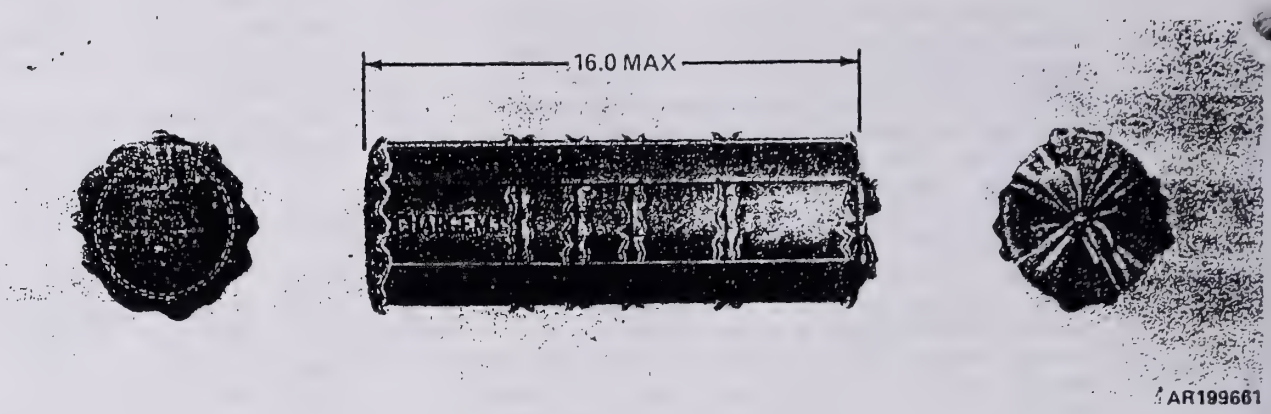

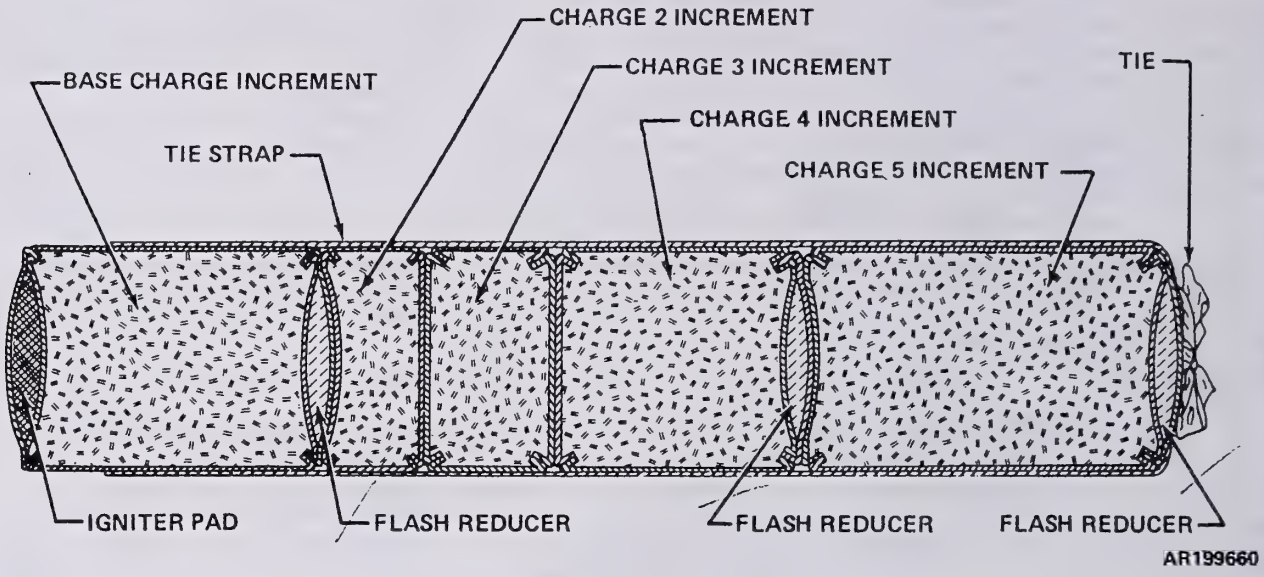

Type Classification:

M3A1: Std AMCTC 4633 dtd 1966
M3: Std AMCTC 4633 dtd 1966

Use:

The M3 series propelling charges are green bag type designed for use in 155-mm howitzers for firing in Zones 1 through 5.

Description:

The full charge consists of approximately 5.50 pounds of propellant including a base charge and four unequal increments loaded in cloth bags. The bags are fastened together with four cloth straps sewn to the base and tied on top of Increment 5. Charge M3 is assembled without flash reducer pads. Charge M3A1 includes 3 flash reducer pads containing potassium nitrate or potassium sulphate. A 2 ounce pad is assembled forward of the base charge and there are two 1-ounce pads forward of Increments 4 and 5. The igniter charge of the M3A1 is 3.5 ounces of clean burning igniter (CBI) in a red cloth bag sewn to the rear of the base section. The igniter charge of the M3 is 3 ounces of black powder. The seams of the base charge section are inverted on the M3A1 only so that the edges of the cloth are inside to reduce residue after firing.

Functioning:

The primer ignites the igniter pad, and the igniter charge, in turn, ignites the propellant

charge. The burning propellant generates rapidly expanding gases to propel the projectile through the barrel and to the velocity required to reach the target or function point. The flash reducer pads serve to limit breech flareback as well as muzzle flash and blast overpressure.

Difference Between Models:

Model M3 does not include flash reducers. The igniter charge is 3 ounces of black powder instead of CBI, and the base seams are not inverted.

Tabulated Data:

Type	Green bag, separate loading
Weight	6.2 lbs.
Length	16 in.
Color	Green w/black markings
Propellant	M1 (5.6 lbs. explosive)
Cannon used with	M1, M1A1, M45, M126, M126A1, M185, M199

Temperature Limits:

Firing:	
Lower limit	- 40°F
Upper limit	+ 125°F
Storage:	
Lower limit	- 80°F (for periods not more than 3 days)
Upper limit	+ 160°F (for periods not more than 4 hrs. /day)
*Packing	2 propelling charges in container M14
*Container:	
Weight	29.0 lbs.
Dimensions	33-3/4 x 6-3/8 x 6-3/8 in.
Cube	0.89 cu. ft.
Explosive per container	11.5 lbs.

*NOTE: See SC for complete packing data including NSN's.

Shipping and Storage Data:

Quantity-distance class	2
Storage compatibility group	J
DOT shipping class	B
DOT designation	PROPELLANT EXPLOSIVE SOLID CLASS B WITH CANNON PRIMERS AND IGNITERS
DODAC	1320-D540
Assembly Dwg. Nos.:	
M3A1	8887277
M3	8864405

Preparation for Firing:

No preparation is required other than adjusting the charge according to the firing zone.

Limitations:

Increments of green bag charges may not be mixed with white bag increments.

References:

SC 1305/30-IL
SB 700-20
DARCOM P 700-3-3
TM 9-1300-251-20
TM 9-1025-200-12
TM 9-2350-217-10
TM 9-2350-217-10N

CHARGE, PROPELLING, 4.2-INCH: M6

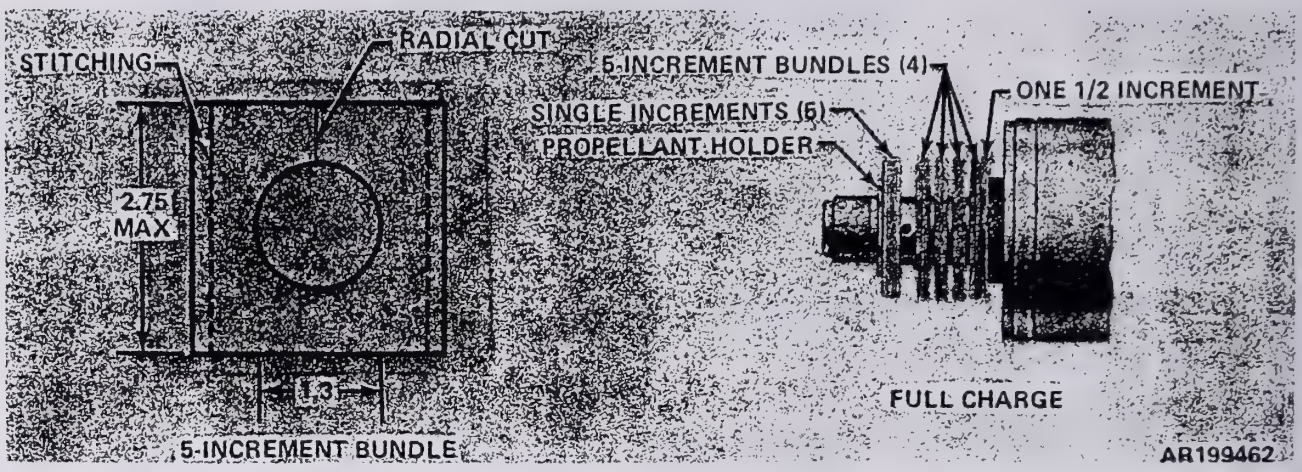

Use:

This charge is a component of Smoke Cartridges M2 and M2A1, Gas Cartridges M2 and M2A1, and High Explosive Cartridges M3 and M3A1.

Description:

A full charge consists of 25-1/2 increments of M8 sheet propellant arranged in the following order: one 1/2 increment, four 5 increment bundles, and five single increments. This full charge is assembled on the cartridge as issued. Individual increments or bundles may be removed as required for fire adjustment as indicated in the appropriate firing tables. The method of securing the increments to the cartridge container varies among the cartridges, but each method involves the use of a wire propellant holder in front of or behind the increments.

Functioning:

The flash from the detonation of Ignition Cartridge M2 passes through the vents in the cartridge container, providing direct ignition of the propelling charge.

Tabulated Data:

Type propellant -------M8
Weight (full charge) ---0.60 lb.
Used with ignition cartridge---------- M2
Drawing number ------71-12-27

Limitations:

To avoid excessive pressure which could result in damage to materiel and injury to personnel, charges must be fired at or above the following temperatures:

23-25-1/2 increments --- +60°F
20-22-1/2 increments --- +20°F
17-19-1/2 increments --- 0°F
5-16-1/2 increments --- -40°F
when using Cartridges M2, M2A1, M3, M3A1, M328, M329B1 and M335 assembled without cartridge container extensions.

CHARGE, PROPELLING, 8-INCH: M1

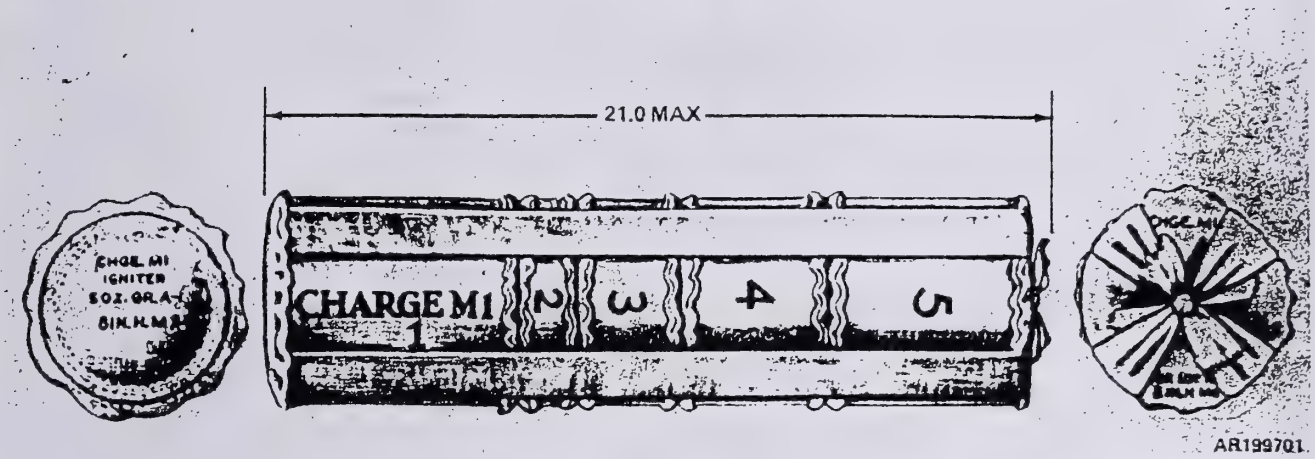

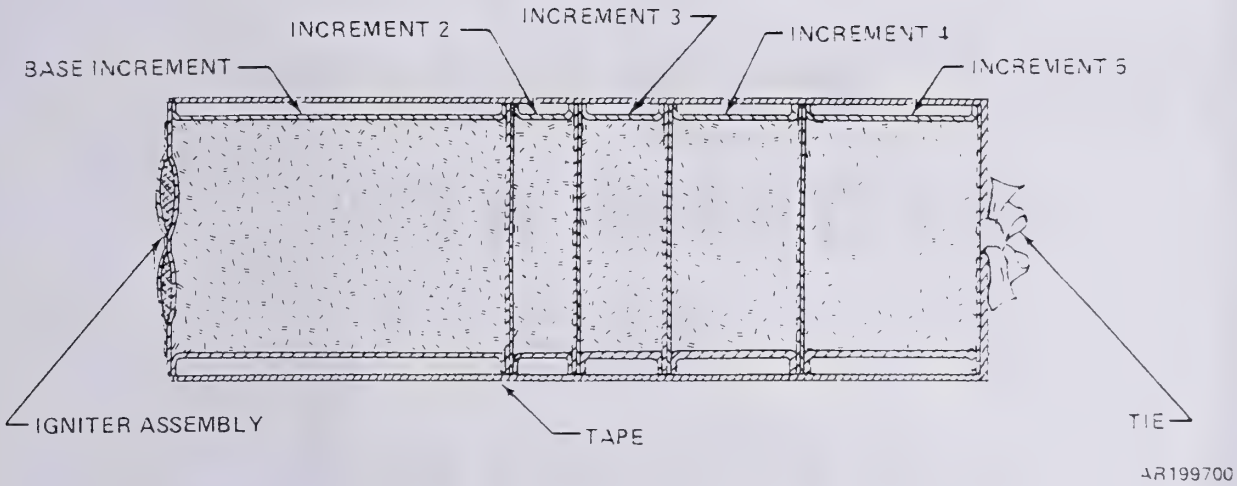

Type Classification:

Std OTCM 36841 dtd 1958

Use:

[illegible] used for zone firing with Charges 1 to 5 in 8-inch howitzer cannons.

Description:

The charge consists of a base section (Charge 1) and four unequal increments (2 through 5) of propellant M1 in green cloth bags. The increments are assembled end to end in sequence, and held in place by four tying straps sewn to the base of Increment 1 and tied over the top of Increment 5. A red igniter pad containing 5 ounces of black powder is sewn to the base of Increment 1. Each increment of the charge and the igniter pad is identified by black [illegible] markings.

Functioning:

The flash from the primer ignites the black powder igniter pad, which in turn ignites the M propellant in the charge. The burning propellant generates gases which force the projectile out of the gun tube at a velocity required to reach the target.

Tabulated Data:

Type	Green Bag, separate loaded propelling charge
Weight	15.0 lbs.
Length	21.0 in. (max.)
Dia.	6.50 in. (max.)
Color	Green w/black marking
Propellant:	
Composition	M1
Grain type	1 perforated L/D = 4.6
Weight	13.6 lbs.
Web	0.017 in.
Primer ----Model	Used with Cannon Weapon
MK2A4	M2, M2A1 (M115)
M82	M47, (M55); M2A2 (M110)
MK15 Mods 2 & 3	M47, (M55); M2A2 (M110)
MK34	M47 (M55)
Assembly Dwg. No.	8860491

Temperature Limits:

Firing:	
Lower limit	- 40° F
Upper limit	+ 125° F
Storage:	
Lower limit	- 80° F (for periods of not more than 3 days)
Upper limit	+ 160° F (for not more than 4 hrs./day)
* Packing	1 charge in metal container; 50 metal containers per pallet
Container	M18A2
Weight	34 lbs.
Dimensions	8-13/32 dia. x 26-9/32 in.
Cube	1.1 cu. ft.
Pallet:	
Weight	1650 lbs.
Dimensions	44 x 52 x 50 in.
Cube	67.2 cu. ft.

*NOTE: See SC for complete packing data including NSN's.

Shipping and Storage Data:

Quantity-distance class	2
Storage compatibility group	J
DOT shipping class	B
DOT designation	PROPELLANT EXPLOSIVES SOLID CLASS B
DODAC	1320-D675

Limitations:

N/A

References:

SC 1305/30-IL
AMCP 700-3-3
SB 700-20
TM 9-2300-216-10
TM 9-1300-250
TM 9-1300-206
TM 9-1300-251-20
TM 9-1300-251-34
TM 9-3004
TM 9-2350-210-12

TM 43-0001-29

TECHNICAL MANUAL

ARMY AMMUNITION DATA SHEETS FOR GRENADES

This copy is a reprint which includes current pages from Changes 1 through 5.

HEADQUARTERS, DEPARTMENT OF THE ARMY

OCTOBER 1977

GRENADE, HAND: FRAGMENTATION, IMPACT M26A2

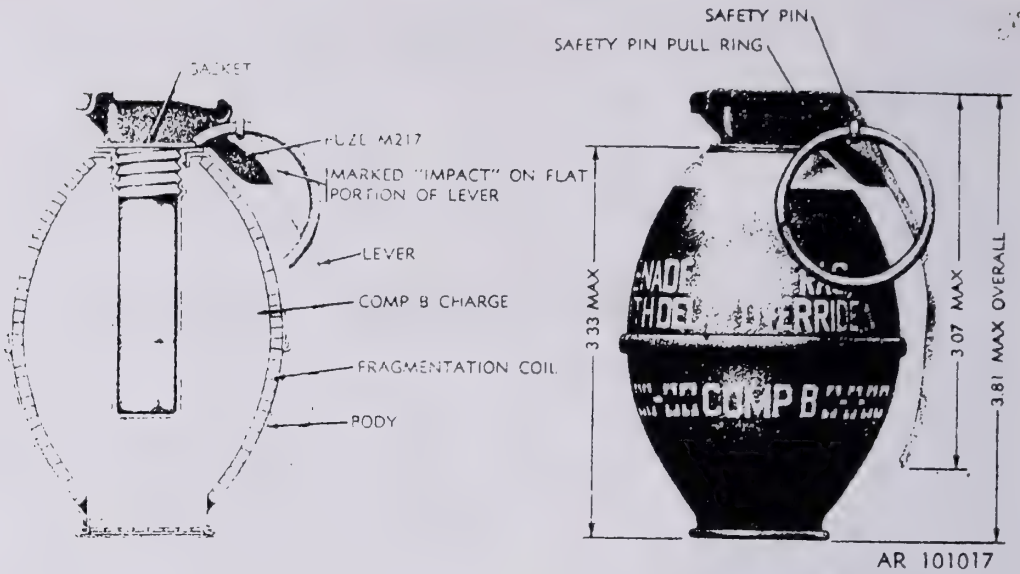

TYPE CLASSIFICATION:

Std. LCC-B, OTCM 37544.

Use:

The M26A2 impact fragmentation hand grenade is used to supplement small armes fire against the enemy in close combat. The grenade produces casualties by high velocity projection of fragments.

Description:

a. Hand grenade M26A2 is assembled with an electrical impact fuze M217 which incorporates a secondary pyrotechnic delay feature which detonates the grenade if it fails to detonate upon impact. The body of the grenade is constructed of two pieces of thinwall sheet steel, has a notched fragmentation coil liner. Bodies contain a high explosive filler.

b. Fuze M217 is equipped with a safety pin, the split end of which is either spread or has a diamond crimp, and a pull ring. IMPACT is embossed on the safety lever. (Older models had red safety levers with or without IMPACT painted thereon in black.) The major components are as follows: a bouchon assembly, a fuze body assembly (which contains a thermal power supply, an arming delay thermal switch, a delay-detonation terminal switch assembly, an impact switch assembly and an electric detonator), and a booster pellet. The bouchon assembly consists of a striker, striker spring, a striker hinge pin, safety lever and safety pin with pull ring. The fuze body is hermetically sealed.

TABULATED DATA:

Grenade (with fuze):
- Model(s)----------M26A2
- Body----------Thin-wall sheet steel w/notched fragmentation coil
- Weight----------16 oz
- Length (max)---------3.9 in.
- Diameter----------2.25 in.
- Color----------Olive drab w/yellow markings

Filler:
- Type----------Comp B w/tetryl pellets

Weight:
- Comp B----------5.5 oz
- Tetryl pellets-------0.3 oz

Fuze:
- Model(s)----------M217
- Type----------Electrical impact w/ overriding delay function feature
- Primer----------M42
- Detonator----------Lead azide, lead styphnate, PETN
- Delay time----------3 to 7 seconds
- Weight----------2.7 oz
- Length----------3.0 in.
- Color, safety lever--Red handle w/IMPACT embossed, in lever; red lever w/or w/o IMPACT stenciled in black on lever

Safety device(s)--Pull ring and safety pin

Federal Supply Code:

NSN------1330-00-782-5540
DODAC----1330-G889
See SC for complete packing data including NSN's pertaining to DODAC.

Unit of Issue:

Each
Packed: 1 per fiber container; 30 per wooden box.

Packing Data:

Packing box:
Weight (with contents)----51 lb.
Dimensions----------19 3/4" X 11 9/16" X 12 13/32"
Cube----------1.60 cu ft

Shipping and Storage Data:

Quantity distance
Class----------7
Storage compatibility group------E and G
DOT shipping
Class----------A
DOT designation---Hand Grenade

Functioning:

Removal of safety pin permits release of the safety lever. When the grenade is thrown, the striker assembly, through action of the striker spring, throws off the safety lever and impacts the percussion primer. The primer initiates the power supply, which causes the fuze to arm within one to two seconds; thereafter, the grenade is subject to detonation upon impact.

NOTE

At high temperature (+125°F), arming time may be as short as 1 second; at low temperature (-40°F), as long as 2 seconds. The secondary pyrotechnic delay feature functions within 3 to 7 seconds throughout the temperature range of -40°F to +125°F.

If the grenade does not detonate on impact (after proper arming time), the grenade will be detonated by the secondary pyrotechnic delay feature. If the fuze fails to function after release of the safety lever, the fuze power supply will become inactive within 30 seconds.

References:

TM 9-1330-200
TM 9-1330-200-12
TM 9-1330-200-34
FM 23-30

Remarks:

The M26A2 is the same as the M57 but without a safety clip.

The bodies of the M26, M26A1, and M61 contain booster pellets and are longer and narrower than those of the M26A2 and M57.

The bodies of the M26A2 and M57 do not contain booster pellets.

The M56 was the M26A2 with fuze M215.

The body of the M26A2 (M57 without a safety clip) is identical with the M61, M26A1, and M26, except the fuze thread is different.

GRENADE, HAND, SMOKE, HC, AN-M8

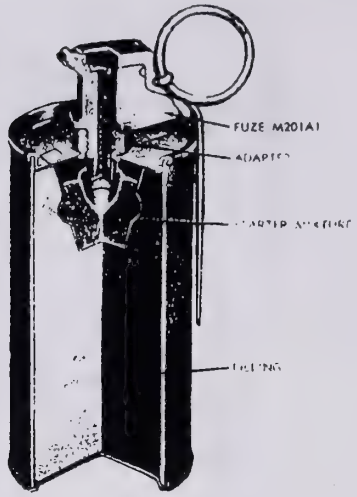

TYPE CLASSIFICATION:

Std. LCC-A, MSR 3408.

Use:

The HC Smoke Hand Grenade AN-M8 is a burning type grenade used to generate white smoke for screening activities of small units. It is also used for ground-to-air signaling.

Description:

a. The grenade body is a cylinder of thin sheet metal. It is filled with HC smoke mixture topped with a starter mixture directly under the fuze opening. The duration of smoke screen or signal is 105 to 150 seconds.

b. Hand grenade fuze M201A1 is a pyrotechnic delay-igniting fuze. The body contains a primer, first-fire mixture, pyrotechnic delay column, and ignition mixture. Assembled to the body are a striker, striker spring, safety lever and safety pin with pull ring. The split end of the safety pin has an angular spread.

c. Safety clips are not required with these grenades.

TABULATED DATA:

Grenade (with fuze):
- Model(s)----------AN-M8
- Body----------Sheet metal
- Weight----------24 oz
- Length----------5.7 in.
- Diameter----------2.5 in.
- Color----------Light green w/black markings
- Packing----------1 per container; 16 per packing box

Filler:
- Type----------HC (type C)
- Weight----------19 oz

Fuze:
- Model(s)----------M201A1
- Type----------Pyrotechnic delay-igniting
- Primer----------M39A1
- Ignition mixture----Iron oxide, titanium, zirconium
- Delay time----------0.7-2 sec
- Weight----------1.5 ox
- Length----------3.9 in.
- Color (safety lever)----------Gray or olive drab w/ black markings
- Packing----------Not separately issued
- Safety device-------Pull ring and safety pin

Federal Supply Code:

NSN------1330-00-219-8511
DODAC----1330-G930
See SC for complete packing data including NSN's pertaining to DODAC.

Unit of Issue:

Each
Grenades Packed - 1 per container; 16 per packing box

Packing Data:

Packing box:
Weight (with contents)-----41.0 lb
Dimensions----------14.0" X 14.0" X 8.0"
Cube----------0.90 cu ft

Shipping and Storage Data:

Quantity distance
Class----------2
Storage compatibility group------A
DOT shipping
Class----------C
DOT designation---Smoke Grenades
Handle Carefully
Keep Fire Away

Functioning:

Removal of the safety pin permits release of the safety lever. When the safety lever is released, it is forced away from the grenade body by a striker acting under the force of a striker spring. The striker rotates on its own axis and strikes the percussion primer. The primer initiates the first fire mixture. The fuze delay element, ignition mixture, and grenade starter mixture and filler are initiated in turn by the preceding component. The pressure sensitive tape is blown off the emission holes and smoke is emitted for 105 to 150 seconds.

References:

TM 9-1330-200
TM 9-1330-200-12
TM 9-1330-200-34
FM 23-30

Drawings:

Assembly----------13-19-32
Fuze----------13-10-22
Packing (inner)------13-9-44
Packing (outer)------13-19-83

GRENADE, RIFLE: SMOKE, WP, M19A1

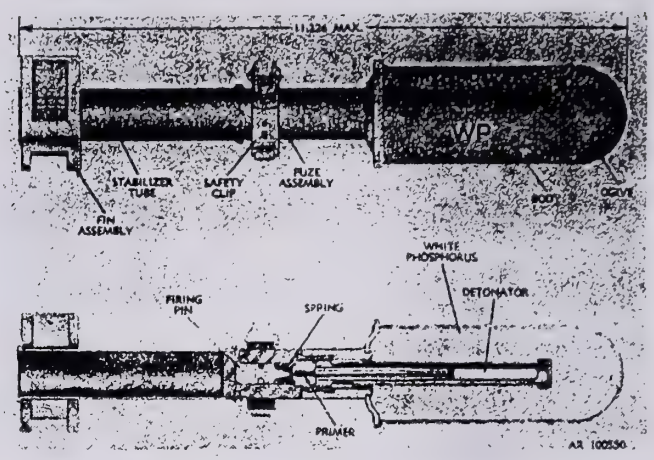

TYPE CLASSIFICATION: **Std. CON MSR 6558**

Use:

For screening, signaling, or for incendiary effect against flammable targets.

Description:

a. WP smoke rifle grenade M19A1 is filled with WP. This chemical agent ignites spontaneously when exposed to air, producing a yellow-white flame and giving off a dense cloud of white smoke. When used as an **anti-personnel** weapon, grenade M19A1 has an effective casualty radius of 10 meters. Grenade M19A1 has a maximum range of approximately 195 meters.

b. WP smoke rifle grenade M19A1 consists of three basic parts: a steel stabilizer tube assembly, an integral fuze and a body.

TABULATED DATA:

Model----------M19A1
Type----------Smoke (WP)
Weight----------1.5 lb
Dimensions:
  Diameter-------2.0 in.
  Height---------11.31 in.
Charge (WP)----- 8.5 oz
Body----------Sheet steel

Fuze:
Type----------Mechanical impact detonating

Color---------Light green w/yellow band; red marking
Packing-------1 per container; 10 containers per packing box

Federal Supply Code:

NSN----------1330-00-542-0715
DODAC---------1330-H030
See SC for complete packing data including NSN's pertaining to DODAC

Unit of Issue:

Each
Grenades Packed: 1 per container; 10 containers per packing box

Packing Data:

Loaded packing box:
Weight 40.9 lb
Dimensions----------19.75 in.x 7.875 in.x 16.75 in.
Cube---------- 1.51 cu ft

Shipping and Storage Data:
Quantity distance class--3
Storage compatibility group----------A
DOT shipping class-------A
DOT designation----------Rifle Grenades

Functioning:

After the grenade is launched, the fuze functions on impact. It bursts the body and scatters particles of burning WP over a large area. Grenade and fuze function as follows:

a. The grenade ogive strikes the ground or other resistant object.

b. Inertia of the firing pin overcomes spring tension and the firing pin strikes the primer.

c. The primer emits a small, intense spit of flame.

d. Flame from the primer explodes the detonator.

e. Explosion of the detonator ruptures the body. Fragments of the body and particles of WP scatter over an area with a radius of approximately 10 meters.

f. Particles of WP ignite upon coming into contact with air and produce a dense cloud of white smoke.

References:

TM 9-1330-200
TM 9-1330-200-12
TM 9-1330-200-34
FM 23-30

Drawing:

Assembly 82-0-109
Fuze (integral with fuze)----------82-2-42
Packing (inner)------9207902
Packing (outer)------9207902

TM 43-0001-36

TECHNICAL MANUAL

ARMY AMMUNITION DATA SHEETS FOR LAND MINES (FSC 1345)

This copy is a reprint which includes current pages from Changes 1 through 5.

HEADQUARTERS, DEPARTMENT OF THE ARMY

FEBRUARY 1977

MINE, ANTITANK: HE, HEAVY, M15

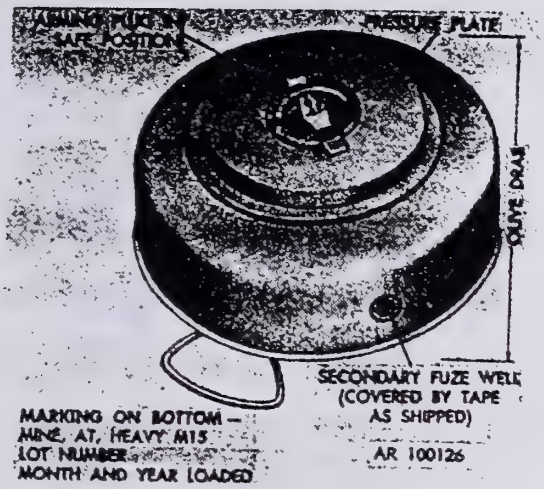

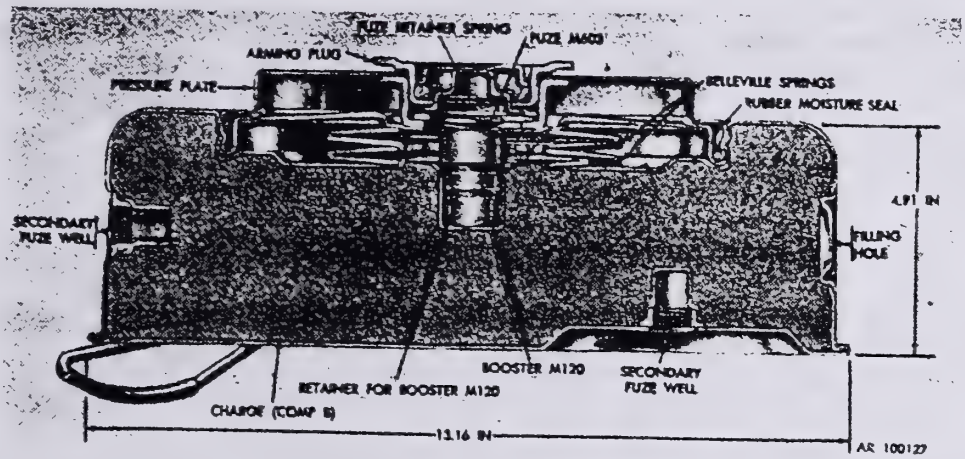

Type Classification: S 37119 (LCC-A)

a. Use. Antitank mine M15 is intended for use against heavy tanks and other types of heavy tracked and wheeled vehicles.

b. Description. The mine is a flat, steel cylinder with the fuze and most of the other components located concentrically with the vertical axis. Two secondary fuzing wells, threaded to accept M1 activators, are located, one in the side and one in the bottom, to provide for alternate fuzing and booby trapping arrangements. The mine, as shipped, has these wells covered with tape. The recessed knob in the M4 arming plug, located top, center, carries an arrow, and may be set to indicate Safe, Danger, or Armed, as indicated on the rim of the plug. A carrying handle, attached to the underside of the mine, is provided. The mine body houses the arming plug, pressure plate, multiple element belleville spring primary fuze, M120 booster, and main explosive charge. The mine is shipped with fuze not assembled, with the fuze packed separately in a metal can in the packing box. Arming of the mine requires the use of the M20 wrench, with which the arming plug is unscrewed, permitting insertion of the fuze. Following removal of the safety fork, the fuze is inserted in the well. After verifying that the setting knob and shutter are in the safe position, the arming plug is screwed into place and wrenched tight. The mine is armed by rotating the setting knob to the Armed position with the M20 wrench.

c. Functioning. When the shutter of the arming plug is in the Armed position, a force of 350 to 750 pounds on the pressure plate of the mine will allow the load to be transferred to the fuze. This force activates the fuze mechanism, driving the firing pin into the detonator. This initiates the M120

booster in the bottom of the fuze well, which, in turn, detonates the main charge.

d. Tabulated Data.

Model number M15
Type ..... AT-Heavy
Drawings—
  Assembly 82-0-189
Weight—fuzed ..... 31.46 lbs
Dimensions—
  Height ..... 4.91 in.
  Max diameter ..... 13.25 in.
Material ..... Steel
Threads—
  Arming plug well 2.313-14NS-1A
  Secondary fuze well 0.75-12NS
Fuze (see separate write-up) M603
Temperature limits—
  Firing — lower ..... −40°F
  — upper ..... +125°F
  Storage — lower ..... −60°F
  — upper ..... +160°F
Shipping and Storage Data—
  Packing arrangement .. 1 mine w/fuze, 1 activ in can, & 1 wrench, all in wooden box.
  Weight ..... 49 lbs
  Dimensions...(ins) ..... 18 x 15 1/8 x 7½
  Cube ..... 1.17 cu ft
  Quantity-distance class 7
  Storage Compatability Gp ..... G
  DOT Shipping Class ..... Class A Expl
  DOT Designator ..... Expl Mines
DODAC 1345K180
Painting ..... Olive Drab
Marking ..... Yellow

e. Explosive Data.

Item	Type	Weight AV	Weight Metric
M603 Fuze—			
M45 Det	PA #100	1.85 grs	120 mgs
	Lead Az	4.24 grs	275 mgs
	RDX	1.85 grs	120 mgs
M120 Boost	RDX	172.5 grs	11.18 gms
M15 Mine—			
Main chg	Comp B	22.75 lbs	10.33 kgs
M1 Activator	(if used)		
M31 Det	Ar Ign Mx	2.3 grs	150 mgs
	Lead Az	3.9 grs	250 mgs
	Tetryl	4.2 grs	270 mgs
Booster	Tetryl	36 grs	2.3 gms

f. Reference.

TM 9-1345-203-12&P

DEPARTMENT OF THE ARMY

US ARMY ARMAMENT RESEARCH, DEVELOPMENT AND ENGINEERING CENTER

PICATINNY ARSENAL, NJ. 07806-5000

ENVIRONMENTAL ASSESSMENT

PROJECT NO. 1-82-09-7797

TITLE: LIFE CYCLE ENVIRONMENTAL ASSESSMENT

CARTRIDGE, 81MM, HE, M821E1

CARTRIDGE, 81MM, HE, M889E1

FIRE SUPPORT ARMAMENTS CENTER

DATE: 15 NOVEMBER 1988

Proponent: Project Engineer, SMCAR-FSS-DM

Chief, Mortar System Office, SMCAR-FSS-DM

Chief, Systems Integration Div., SMCAR-FSS

Environmental Coordinator: for D. FREEMAN, P.E., SMCAR-AES-P, ED/FSAC — DATE: 3 Mar 89

OPSEC Official: R. SOUDERS, SMCAR-ISI, ARDEC — DATE: 13 Oct 89

Environmental Coordinator: THOMAS J. SOLECKI, Chief, Environmental Technology and Energy Resources Office, SMCAR-EA, ARDEC — DATE: 10-6-89

Responsible Official: RICHARD H. JOHNSON, Colonel, Ordnance Corps, Commander/Director, FSAC — DATE: 10-13-89

LIFE CYCLE ENVIRONMENTAL ASSESSMENT
PROJECT NUMBER 1-82-09-7797

TITLE: CARTRIDGE, 81MM, HE, M821E1
CARTRIDGE, 81MM, HE, M889E1

1. Purpose and Need for Proposed Action - The 81mm M821E1/M889E1 HE Ctgs are Americanized versions of the United Kingdom's (UK) M821/M889 HE Ctgs. The M821E1/M889E1 will retain the range, accuracy and Lethality of the UK 81mm M821/M889 while utilizing a less expensive method of manufacturing and facilitization. The M821E1/M889E1 are required in order to have on shore capability to produce an I-81mm HE round that meets safety and performance standards of the UK 81mm cartridges. The M821E1/M889E1 rounds will eventually replace the UK 81mm rounds.

2. General Description of Proposed Action - The project involves development of an Americanized 81mm HE Cartridge for firing from the 81mm mortars which will retain the range, accuracy and lethality of the UK M821 HE Rounds.

a. The M821E1/M889E1 Cartridges are composed of the following material:

1. Body, HF1 Nomalized steel
2. M24 Fin assembly: Aluminum Alloy
3. Obturator; Polycarbonate per ASTM D3935-80
4. Fuzes (M734/M935):

a) Multi-Option Fuze, M734 - This fuze provides four (4) fuze functions (Proximity airburst, near-surface burst, electromechanical impact, and mechanical delay after impact). It utilizes a ram air turbine/alternator to provide fuze electrical power and mechanical energy to arm the fuze after a minimum safe travel distance. The M734 fuze is constructed primarily of plastic and aluminum. The explosive elements contained in the fuze are minute compared to the cartridge and any impact on the environment from these elements is minimal. Any fragments resulting from the explosion of the fuze has no significant impact on the environment (Ref. Life Cycle Environmental Assessment Improved 81mm Mortar System, Cartridge, 81mm, HE, M821/Cartridge, 81mm, HE, M889).

b) Point - Detonating Fuze, M935: The M935 Point-Detonating fuze is a selective, super-quick or 0.5 second delay action impact type fuze for use with M888 60mm mortar cartridge and M889 81mm mortar cartridge. The fuze is primarily constructed of aluminum with some internal parts made of zinc.

The front body assembly contains an arming mechanism and a firing mechanism which includes two spring-loaded set back pins, a slider with inner and outer compression springs, an arming pin, and two balls which restrain the super-quick firing pin and a pyrotechnic, delayed arming striker sequence.

DEPARTMENT OF THE ARMY
US ARMY ARMAMENT RESEARCH, DEVELOPMENT AND ENGINEERING CENTER
DOVER, N.J. 07801-5001

ENVIRONMENTAL ASSESSMENT
PROJECT NO: 1X464601AD227

TITLE: LIFE CYCLE ENVIRONMENTAL ASSESSMENT

IMPROVED 81MM MORTAR SYSTEM

FIRE SUPPORT ARMAMENTS CENTER

DATE: 10 May 1988

Proponent:

Project Engr.
SMCAR-FSS-DM

Chief, Mortar Systems
Office, SMCAR-FSS-DM

for Chief, Systems
Integration Div.,
SMCAR-FSS

Environmental Coordinator: DATE: 6/1/88

D. FREEMAN, P.E.
SMCAR-AES-P, ED/FSAC

OPSEC Official: DATE: 20 July 1988

R. SOUDERS
SMCAR-ISI, ARDEC

Environmental Coordinator: DATE: 20 July 1988

THOMAS J. Solecki
Chief, Environmental Technology
and Energy Resources Office, SMCAR-ISE-N, ARDEC

Responsible Official: DATE: 29 JUL 1988

RICHARD H. JOHNSON
Colonel, Ordnance Corps
Commander/Director, FSAC

LIFE CYCLE ENVIRONMENTAL ASSESSMENT

PROJECT NUMBER: 1X464601AD227

TITLE: IMPROVED 81MM MORTAR SYSTEM, M252

1. Purpose and Need for Proposed Action - The Improved 81mm Mortar will provide the organic indirect fire support needed by the Infantry maneuver battalion. It will satisfy a need to improve the performance and effectiveness of the current 81mm Mortar System, and to provide improvements in the area of range, stability, fire control and ammunition lethality.

The United Kingdom's 81mm Mortar System (US designated M252) was chosen to provide improved performance and effectiveness as well as improved interoperability. The improved mortar system will provide significant increases in operational capabilities thus allowing the replacement of current mortars in some infantry units.

2. General Description of Proposed Action - The project includes the transfer of technology of a mortar system from the UK, (the improvement of the product) Improvement 81mm Mortar System (I-81), capable of meeting the Required Operational Capability (ROC) of increased range, improved performance and effectiveness as well as improved interoperability with our NATO allies. The UK produces the I-81mm Mortar System for the US as well as for themselves and other countries under UK environmental regulations. Therefore, the US environmental regulations do not apply.

a. M252 Mortar System - The M252 Mortar (UK designated L16A2) consists of the following:

(1) Cannon, M253 - The M253 Cannon is a smooth-bore, forged, hollow steel barrel providing 32.83 inches of projectile travel.

(2) Mount, M177 - The M117 Bipod is a conventional bipod mortar Mount made of light alloy steel providing necessary elevation, azimuth and cross leveling adjustments.

(3) Baseplate, M3 - The M3 Baseplate is an existing, US (International Manufacturing Corporation) produced item consisting of a one piece aluminum forging and is currently used on the existing M29 and M29A1 Mortar. An improved, high strength version of this baseplate designated M3A1, will replace the basic M3 by attrition. This item is used only for anchoring the weapon and does not produce any fragments or other waste when the weapon is fired.

(4) Sight Unit, M64A1 - The M64A1 Sight is an existing US design produced by Ernst Leitz of Canada. There is a panoramic telescope incorporating deflection and elevation features. The dials and reticles are self-illuminating, utilizing tritium. This sight is also used on the 60mm M224 Light Weight Company Mortar System.

(5) Propellant Container - The container is a US produced item manufactured by Armtec, Inc., Coachella, CA.

b. Ammunition - The M252 Mortar System includes the following high-explosive (HE) ammunition:

(1) Cartridge, 81mm, HE M821 (UK designated XL31E2) - This cartridge is produced by Royal Ordnance in the United Kingdom except for the US produced M734 Multi-Option Fuze and M223 propellant increment container. The M734 Fuze has been produced in the US by Kodak, Inc., Rochester, NY for use on the 60mm M720 HE Cartridge, Light Weight Company Mortar System (LWCMS).

(2) Cartridge, 81mm, HE, M889 - This round is identical to the M821 except for use of the M935 PD Fuze instead of the M734. The M935 Fuze has been produced in the US by Bulova Corporation for use on the 60mm M888 HE Cartridge.

(3) Multi-Option Fuze, M734 - This fuze provides four (4) fuze functions (proximity airburst, near-surface burst, electromechanical impact, and mechanical delay after impact). It utilizes a ram air turbine/alternator to provide fuze electrical power and mechanical energy to arm the fuze after a minimum safe travel distance. The M734 fuze is constructed primarily of plastic and aluminum. The explosive elements contained in the fuze are minute compared to the cartridge and any impact on the environment from these elements is minimal. Any fragments resulting from the explosion of the fuze has no significant impact on the environment.

(4) Point - Detonating Fuze, M935: The M935 Point-Detonating fuze is a selective, super-quick or 0.5 second delay action impact type fuze for use with M888 60mm mortar cartridge and M889 81mm mortar cartridge. The fuze is primarily constructed of aluminum with some internal parts made of zinc.

The front body assembly contains an arming mechanism and a firing mechanism which includes two spring-loaded set back pins, a slider with inner and outer compression springs, an arming pin, and two balls which restrain the super-quick firing pin and a pyrotechnic, delayed arming striker sequence.

The explosive train consists of a delay detonator and a super-quick detonator housed 90° apart in the cylinder slider, a lead assembly and a booster charge. The explosive elements contained in the fuze are minute compared to the cartridge and any impact on the environment from these elements is minimal. Any fragments resulting from the explosion of the fuze have no significant impact on the environment.

3. Alternative Considered

The design and development of a new 81mm Mortar System, including the product improvement of the existing US M374A3 High Explosive Cartridge, to meet the ROC were considered. The selection of the UK system was based upon the highly motivated Rationalization, Standardization, and Interoperability (RSI) movement and the associated bilateral agreements to utilize available systems from other countries rather than to develop a similar system.

FINDINGS OF NO SIGNIFICANT IMPACT

Project Number: 1X464601AD227

Title: Improved 81mm Mortar System

1. Name of Action: To field the I81mm Mortar System for the US Marine Corp (June 88) and for the US Army (Sept 88).

2. Description of action: The M252 Mortar System is the transfer of technology and the development with the United Kingdom of an Improved 81mm Mortar System which meets the Required Operational Capability of increased range (over the current system), improved performance and effectiveness as well as interoperability with our NATO allies. It is considered the best alternative because it utilizes an available system from another country rather than developing a similar system.

3. Discussion of the Anticipated Environmental Effects: The anticipated environmental effects resulting from this weapon system will be minor and temporary in nature. All firing will be conducted in compliance with applicable laws and regulations of the military bases and in areas specifically dedicated to this type of weapon deployment. The primary sources of pollution are the propellant, explosive, and chemical reaction products that are produced from firing the mortar cartridges. However, these emissions are of short duration and will not produce any significant or permanent impact on the quality of air, water, or soil. Since this weapon will be fired in controlled remote areas, there will be no significant impact on the flora and fauna or any adverse impact on any archeological or historical sites.

4. Conclusions: The manufacturing, loading, and testing of the Improved 81mm Mortar System will not significantly impact the environment of using installations. Therefore, it has been determined that this program:

a. Is not a major federal action significantly affecting the quality of the human environment.
b. Will not have a significant impact on the environment.
c. Is not likely to be environmentally controversial.
d. Will not likely result in litigation based on environmental quality issues.
e. Does not require any other environmental impact statement.

5. Point of Contact for Public Comments:

Department of the Army
Commander, ARDEC
ATTN: AMCPM-MO, (Mr. S. Pinkard)
Picatinny Arsenal, N.J. 07806-5000

6. Comments regarding these findings should be forwarded to POC within thirty (30) days of public notification.

DEPARTMENT OF THE ARMY

US ARMY ARMAMENT RESEARCH, DEVELOPMENT AND ENGINEERING CENTER

PICATINNY ARSENAL, N.J. 07806-5000

ENVIRONMENTAL ASSESSMENT

CARTRIDGE, 81MM: ILLUMINATING, M853A1

PROJECT NO. 1W464601D22700

TITLE: LIFE CYCLE ENVIRONMENTAL ASSESSMENT

FIRE SUPPORT ARMAMENTS CENTER

JUNE 1989

PROPONENT:
Systems Engineer 6/27/89
SMCAR-FSS-DM X4458

Chief, 8/30/89
Mortar Systems Office
SMCAR-FSS-DM

Chief,
Systems Integration Division
SMCAR-FSS

Product Manager 8/29/89
Mortars
AMCPM-MO

ENVIRONMENTAL COORDINATOR:
D. Freeman, F.E.
SMCAR-AES-P, ARDEC
DATE: 7/7/89

ENVIRONMENTAL COORDINATOR:
Thomas J. Solecki
Chief, Environmental Technology and Energy Resources Office
SMCAR-EA, ARDEC
DATE: 8-28-89

OPSEC OFFICIAL:
R. Souders
SMCAR-ISI, ARDEC
DATE: 29 Aug 89

RESPONSIBLE OFFICIAL:
Richard H. Johnson
Colonel, Ordnance Corps.
Commander/Director
FSAC, ARDEC
DATE: 31 Aug 89

LIFE CYCLE ENVIRONMENTAL ASSESSMENT

PROJECT NO. 1W464601D22700

TITLE: CARTRIDGE, 81MM:ILLUMINATING, M853A1

A. PURPOSE AND NEED FOR PROPOSED ACTION.

This environmental assessment involves the development of the M853A1 Illuminating Cartridge for use in the M252 81mm Mortar System. This munition was designed to provide significantly improved illumination effects and will be a replacement for the currently fielded M301A3 Illuminating Cartridge. The M853A1 Cartridge has the capability to provide sufficient illumination to permit adjustment of fire and to observe out to the maximum range of the M821 HE Cartridge.

B. GENERAL DESCRIPTION OF PROPOSED ACTION.

1. GENERAL CHARACTERISTICS: The design of the M853A1 Illuminating Cartridge is based on the use of a cylindrical cargo configuration to attain adequate payload capacity with maximization on the ballistic range capability. The M853A1 Cartridge is comprised of a thick-walled aluminum body tube which contains the payload (parachute and illuminating candle), an aluminum tail cone, aluminum tail fin assembly, obturating ring, and the same M772 MTSQ Fuze used on the M819 RP Smoke Cartridge. The payload is base ejected and, upon deployment of the illuminating candle, produces 525,000 candlepower and burns for 50 seconds minimum.

2. FUNCTIONING CHARACTERISTICS: In use, the M853A1 Cartridge is dropped into the mortar tube, fin end first. The Federal 150 Primer in the M752A1 Ignition Cartridge functions on striking the firing pin in the base of the mortar. The fired primer ignites a black powder pellet which flashes through holes in the flash tube to initiate the M9 Propellant Charge. The burning M9 Propellant flashes through flash holes in the boom of the M29 Fin igniting the M219 Propelling Charge increments containing M38 Propellant. The resulting gas pressure forces the projectile out of the mortar tube. During ballistic flight, the M772 Fuze functions and initiates a detonator which ignites the black powder expelling charge. The payload is base ejected and, upon deployment, the burning candle produces illumination.

FINDING OF NO SIGNIFICANT IMPACT

-oject Number: 1W464601D22700

ıitle: Cartridge, 81mm:Illuminating, M853A1

1. Name of Action:

The 81mm M853A1 Illuminating Cartidge is an improved illuminating munition.

2. Brief Discussion of the Action:

This munition was designed to provide significantly improved illuminating effects and will be a replacement for the currently fielded M301A3 Illuminating Cartridge. The M853A1 Cartridge has the capability to provide sufficient illumination to permit adjustment of fire and to observe out to the maximum range of the M821 HE Cartridge.

3. Discussion of Anticipated Environmental Effects:

a. The combustion products produced by firing the 81mm M853A1 Illuminating Cartridge are considered of low toxicity. These products will have a minimal effect on water and land quality as a result of potential migration.

b. Air pollution will be limited to that derived from functioning of the munition. This is of a transient nature. The gaseous emissions dissipate rapidly in the open air.

c. Solid wastes include steel and aluminum metal parts which have a negligible impact on the environment.

d. Initial Production Testing will be conducted at Dugway Proving Ground. Test firings will be conducted on approved test sites in compliance with federal, state and local environmental laws and regulations.

e. Dugway Proving Ground is an established TECOM test facility with compatible use noise zones. Therefore, noise levels will comply with environmental regulations.

f. Manufacture and assembly of the M853A1 Illuminating Cartridge will be conducted at approved government owned facilities. Control of production wastes, emissions and effluents will be accomplished under applicable federal, state and local environmental laws and regulations and consequently there will be no adverse environmental effects.

4. Conclusions:

The manufaturing, loading, and testing of the M853A1 Illuminating Cartridge will not significantly impact the environment of using installations. The determinations on this program are as follows:

a. Is not an action significantly affecting the quality of the human environment.

b. Will not have a significant impact on the environment.

c. Is not likely to be environmentally controversial.

d. Does not require an environmental impact statement.

5. Point of Contact for Public Comments:

Department of the Army
COMMANDER, ARDEC
ATTN: AMCPM-MO (Mr. S. Pinkard)
Picatinny Arsenal, NJ 07806-5000

6. Comments regarding these findings should be forwarded to POC within thirty (30) days of public notification.

DEPARTMENT OF THE ARMY

US ARMY ARMAMENT RESEARCH, DEVELOPMENT AND ENGINEERING CENTER

PICATINNY ARSENAL, NJ 07806-5000

ENVIRONMENTAL ASSESSMENT

PROJECT NO: 6463 D250

TITLE: LIFE CYCLE ENVIRONMENTAL ASSESSMENT

CARTRIDGE, 81MM, PRACTICE, M879

FIRE SUPPORT ARMAMENTS CENTER

DATE: 15 NOVEMBER 1988

Proponent: Project Engr. SMCAR-FSS-DM

Chief, Mortar Systems Office, SMCAR-FSS-DM

Chief, Systems Integration Div., SMCAR-FSS

Environmental Coordinator: D. FREEMAN, P.E. SMCAR-AES-P, ED/FSAC — DATE: 3 Mar 89

OPSEC Official: R. SOUDERS SMCAR-ISI, ARDEC — DATE: 29 Oct 90

Environmental Coordinator: THOMAS J. SOLECKI Chief, Enviromental Technology and Energy Resources Office, SMCAR-EA, ARDEC — DATE: 11-13-90

Responsible Official: GERARD G. JAMES COL, FA Commander/Director, FSAC — DATE: [illegible]

LIFE CYCLE ENVIRONMENTAL ASSESSMENT
PROJECT NO. 6468 D250

TITLE; CARTRIDGE, 81MM, PRACTICE M879

1. Purpose of Needs for Proposed Action:

The M879 Training/Practice (T/P) Cartridge is a low cost round which will provide full range capability for infantry training. It will satisfy a need for a training round which provides a visual and audible effect upon impact of sufficient magnitude to permit the forward observer to make fire adjustments under all climatic conditions anticipated for its use. It also provides realistic ammunition handling for the mortar crew.

2. General Description of Proposed Action:

The project involves development of an 81mm Training Cartridge. The program is in accordance with the Training Device Requirements (TDR) cards ef No. 0252. This cartridge is being developed to replace the existing high explosive rounds used for training. The M879 will be more cost efficient and safer than the HE cartridges.

A. The M879 T/P Cartridge is non-fragmenting and disposable. It is currently composed of the following materials:

1. Body; 1340 Steel Forging (ASTMA322).

2. M24 Fin Assembly; Aluminum Alloy 7075-T6 (ASTM-B221).

3. Obturator; Polycarbonate (ASTM D3935-80).

4. M751 Fuze; Aluminum Alloy (ASTM B85, Alloy SC84B).

5. M299 Ignition Cartridge; Aluminum Alloy 2024-T4(ASTM-B211).

6. Fiber Propellant Container; Kraft Fiber, Spec MIL-C-50269 and nitrocellulose, Grade A, Type I, Spec MIL-N-244.

7. 20 gauge Pyrotechnic Fuze Signature Charge: Polyethylene and Low Carbon Steel (AISI 1018).

B. The firing of an M879 T/P Cartridge at maximum charge results in the initiation of three (3) separate chemical reactions, i. e.,

1. The primary ignition system; M299 Ignition Cartridge

2. The secondary propulsion system; 4 ea M220 Propelling Charges

3. The Pyrotechnic Fuze Signature Charge.

FINDING OF NO SIGNIFICANT IMPACT

Project Number : 6468 D250

TITLE: Cartridge, 81mm, Practice M879

1. Name of Action:

M879, 81mm, Full-Range Training Rounds to be used for realistic training of mortar crews and forward observers.

2. A Brief Description of the Action:

a. The M879, 81mm Training Round will provide a visual and audible effect upon impact to permit forward observers to make fire adjustment under all climatic conditions, as well as provide realistic ammunition handling techniques for the crew.

b. Alternatives Considered:
The 81mm high explosive (HE) rounds which are currently used for troop training incurs an economic and safety burden on the user. The M879 full range training cartridge will replace the HE cartridge and will provide realistic training. The M879 does not incorporate the HE fill and costs approximately 58% less than the HE cartridge. The training cartridge will also reduce the environmental impacts experienced by the HE cartridges by reducing the overall emissions. For the HE life cycle analysis see documents - Ctg, 81mm, HE M821E1, Ctg, 81mm, HE, M889E1, Improved 81mm Mortar System.

3. Discussion of Anticipated Environmental Effects:

a. The reaction products produced by firing the M879 Cartridge are considered of low toxicity. (See Paragraph 2B)

b. Since test firings have been conducted at APG, TECOM facilities are buffered and the noise level will comply with environmental regulations.

c. The manufacture and assembly of M879 Cartridges is accomplished in accordance with applicable federal, state and local environmental laws and regulations, and consequently there will be no adverse environmental effect.

4. Conclusions which led to the FNSI:

a. The manufacture and assembly of training rounds will be done by an approved load/assemble/pack (LAP) facility, MILAN. This work will be done under applicable federal, state and local environmental laws and regulations and consequently will not adversely impact the environment.

b. The M879 Training Cartridge will be deployed to Army Camps and Bases in the USA. For European use, a training round with only a white smoke signature is required due to ranges being of limited size, many of which are bordered by private homes.

c. The M879, 81mm Training Round is a non-fragmenting and disposable projectile. It has been determined that the use of the M879 Full-Range Training Round:

(1) Is not a major federal action significantly affecting the quality of the human environment.

(2) Will not have a significant impact on the environment.

(3) Is not likely to be environmentally controversial.

(4) Does not require an environmental impact statement.

5. Point of Contact and deadline for receipt of public comment:

(a) Department of the Army
Commander, ARDEC
ATTN: AMCPM-MO, (Mr. S. Pinkard)
Picatinny Arsenal, NJ 07806-5000

(b) Deadlines for receipt of public comment is 30 days after completion of Findings of No Significant Impact (FNSI).

DEPARTMENT OF THE ARMY
US ARMY RESEARCH, DEVELOPMENT AND ENGINEERING CENTER
DOVER, NEW JERSEY 07806-5000

RECORD OF ENVIRONMENTAL CONSIDERATIONS

PROJECT NUMBER: 2-MU-001-880-001

TITLE: CARTRIDGE, 81MM. PRACTICE, M880 WITH REFURBISHMENT KITS

FIRE SUPPORT ARMAMENTS CENTER

DATE: 16 June 1992

Description of Proposed Action: This project involved the development of an 81mm practice cartridge. The program is in accordance with the training device requirement(TDR). This cartridge was developed to replace the existing high explosive rounds used for training. The M880 will be more cost efficient and safer than the high explosive cartridges.

Anticipated Date and/or Duration of Proposed Action: 1 July 1992

It has been determined that the action (choose one):

a. Is adequately covered in the existing EA X EIA ___ EIS ___
entitled: Life Cycle Environmental Assessment, Cartridge, 81mm, Practice, M879
and dated: 15 November 1988

(Provide copy of cited document to Commander EQC, if available)

b. Qualified for categorical Exclusion#___ , Appendix A, AR 200-2, and no extraordinary circumstances exist as defined in Paragraph 4-3, AR 200-2.
(Include Environmental Quality Consideration evaluation).

c. Is exempt from NEPA requirements under the provisions of (cite superseding law):

Proponent: _____ _____
Project Engineer Division Chief

Environmental Coordinator: _____ P.E. DATE: 6/17/92
Mr. D.B. Freeman, P.E.
AED, SMCAR-AES-P

Responsible Official: _____ DATE: 6/18/92
Gerard. G. James
COL, FA
Commander/Director

OPSEC Officer: _____ DATE: 18 Jun 92
Mr. R. Souders, SMCAR-ISI

Legal Office: _____ DATE: 7 Jun 92
Mr. B. Halperin, Ch, Legal Office
SMCAR-GC

Approved: _____ DATE: 7/16/92
T. Davidson
Technical Director

FIRE SUPPORT ARMAMENTS CENTER

ENVIRONMENTAL QUALITY CONSIDERATIONS

PROJECT: NUMBER: 2-MU-001-880-001

TITLE: Cartridge, 81mm, Practice, M880 with Refurbishment Kits

Proponent: Mark J. Zhelesnik DATE: 16 June 1992

1. Concise Description of the proposed project:

The M880 Practice Cartridge is a low cost round which will provide 1/10 range capability for infantry training. It will satisfy a need for a training round which provides a visual and audible effect upon impact of sufficient magnitude to permit the forward observer to make fire adjustments under all climatic conditions anticipated for its use. It also provides realistic ammunition handling for the mortar crew.

The M880 Practice Cartridge is composed of the following materials:

1. Body;cast Iron, (hollow)
2. Tail Fin; Aluminum Alloy
3. Obturator; molded plastic
4. M775 Fuze; Aluminum Alloy, 20 gauge Pyrotechnic Fuze Signature Charge (12 grams)
5. M985 Ignition Cartridge (5.51 grams)
6. Increment Plugs, Polyethylene, high density

The M879 81MM Practice Cartridge (Full Range), upon which this Record of Environmental Considerations is based, is composed of the following materials:

1. Body; forged steel projectile filled with 60% white hydrocal gypsum cement, 40% water
2. Tail Fin; Aluminum Alloy
3. Obturator; molded plastic
4. M751 Fuze; Aluminum Alloy, 20 gauge Pyrotechnic Fuze Signature Charge (18 grams)
5. M299 Ignition Cartridge (6.8 grams)
6. Four M220 Increment Containers (155 grams)

The M879 has the same fuze composition but with a higher amount of energetic material, and the ignition system has a higher total energetic level than that of the M880 system. The M879 ignition system uses the M299 ignition cartridge plus four M220 increment containers while the M880 uses only a 12 gauge shot gun shell as the ignition system. The M879 is also a full range fire and forget cartridge which would remain as an environmental contaminant while the M880 is a 1/10 range recoverable cartridge which is refurbished and used again.

The firing of an M880/M879 cartridge at any charge results in the initiation of two separate chemical reactions, i.e.

1. The Ignition system
2. The Pyrotechnic Fuze Signature Charge

The chemical composition and reaction products for the M880 energetic components are as follows:

PYROTECHNIC FUZE SIGNATURE CHARGE

PYROTECHNIC COMPOSITION (SW592): TOTAL WEIGHT: 12grams/round

	WEIGHT
Aluminum (36%)	4.32 grams
Potassium Perchlorate (36%)	4.32
Zinc Dust (28%)	3.36

REACTION PRODUCTS POSTULATED:	WEIGHT
Aluminum Oxide (56%)	8.14 grams
Potassium Chloride (29%)	4.18
Zinc Oxide (15%)	2.33

IGNITION CARTRIDGE M985:

COMPOSITION (Double Base Propellant Charge, Weight: 5.51 grams/round)

	WEIGHT
Nitrocellulose (57.12%)	3.15 grams
Nitroglycerine (40.26%)	2.22
Ethyl Centralite (1.16%)	0.06
Potassium Sulfate (1.26%)	0.069
Graphite Glaze (added) (.20%)	0.011

REACTION PRODUCTS POSTULATED:	WEIGHT
Carbon Dioxide (26.82%)	1.48 grams
Carbon Monoxide (24.12%)	1.33
Water (25.46%)	1.4
Hydrogen (8.60%)	.474
Nitrogen (14.99%)	.826

The M880 propulsion system uses a 12 gauge shot gun shell filled with 1.67 grams of double base propellant, while the M879 uses the M299 ignition cartridge containing 6.8 grams of M9 flake propellant and four M220 increment containers containing a total of 155 grams on M38 ball powder. As a result, the M880 propulsion system produces considerably less reaction products than the M879.

The M775 fuze (M880) has the same spotting charge (SW592) pyrotechnic signature charge as the M751 fuze (M879). However, the M775 fuze also incorporates inert diatomaceous earth and has six grams less of the SW592 composition (12 grams vs 18 grams), and thus produces less reaction products than the M751 fuze.

The M880 Short Range Practice Cartridge is adequately covered by the referenced M879 Environmental Assessment. The M880 Short Range Practice Cartridge and Refurbishment Kits will result in reduced environmental impacts due to the performance differences between the M880 and the M879 practice cartridges, as discussed in the preceding paragraphs.

See attached sheet for the reaction products of the M879 Full Range Practice Cartridge.

2. Does the proposal conform with installation Master Plan?
   _x_ Yes _____No (discuss)

3. Would proposed project alter land use on the installation?
   ____ Yes (discuss) _x_ No

4. Prior use and condition of the property and/or equipment involved:
N/A

5. Proposed use of the property, equipment and/or completed project:
The M880 Cartridge and Refurbishment Kits will be used for Practice/training during mortar firings. The M880 will be fired from the M252 and M29A1 Mortars.

Project Number: 2-MU-001-880-001

Title: Cartridge, 81mm Practice, M880 with Refurbishment Kits

6. Under planned conditions environmental impact during implementation(e.g., fabrication transportation, construction phase, equipment placement or refinement phase, etc.) of proposed action - (1 = improvement, 2 = no change, 3 = minor adverse impact, 4 = moderate adverse impact, 5 = major adverse impact):

a. Potential to cause air pollution	1	2	3	4	5
b. Potential to cause water pollution	1	2	3	4	5
c. Potential to impact on the quality or quantity of groundwater	1	2	3	4	5
d. Potential to affect wetlands, flood-plain, wild and scenic rivers	1	2	3	4	5
e. Potential for discharge of release of hazardous substances	1	2	3	4	5
f. Potential to cause soil contamination	1	2	3	4	5
g. potential to violate a safety, public health or noise standard	1	2	3	4	5
h. Potential to impact on protected species or their habitat	1	2	3	4	5
i. Potential to affect cultural resources that are either on or eligible for the Natural Register, or unstudied	1	2	3	4	5
j. Potential effects upon labor force	1	2	3	4	5
k. Potential to impact upon recreational areas and/or prime farmland	1	2	3	4	5
l. Potential to affect energy supply or demand	1	2	3	4	5
m. Potential to impact upon flora and fauna	1	2	3	4	5
n. Potential environmental controversy involved with project:					
1. Local	1	2	3	4	5
2. National	1	2	3	4	5
o. Potential to violate Federal, State or Local law.regulation designed to control air pollution	yes____		no X		
p. Potential to violate Federal, State or Local law.regulation designed to control water pollution	yes____		no X		
q. Potential involvement with contaminated areas and/or material	yes____		no X		

Project Number: 2-MU-001-880-001

Title: Cartridge, 81mm Practice, M880 with Refurbishment Kits

7. Under planned conditions environmental impact during operation phase conduct of test evaluation, etc. of proposed action - (1 = improvement, 2 = no change, 3 = minor adverse impact, 4 = moderate adverse impact, 5 = major adverse impact):

a. Potential to cause air pollution	1	2	3	4	5
b. Potential to cause water pollution	1	2	3	4	5
c. Potential to impact on the quality or quantity of groundwater	1	2	3	4	5
d. Potential to affect wetlands, flood-plain, wild and scenic rivers	1	2	3	4	5
e. Potential for discharge of release of hazardous substances	1	2	3	4	5
f. Potential to cause soil contamination	1	2	3	4	5
g. potential to violate a safety, public health or noise standard	1	2	3	4	5
h. Potential to impact on protected species or their habitat	1	2	3	4	5
i. Potential to affect cultural resources that are either on or eligible for the Natural Register, or unstudied	1	2	3	4	5
j. Potential effects upon labor force	1	2	3	4	5
k. Potential to impact upon recreational areas and/or prime farmland	1	2	3	4	5
l. Potential to affect energy supply or demand	1	2	3	4	5
m. Potential to impact upon flora and fauna	1	2	3	4	5
n. Potential environmental controversy involved with project:					
1. Local	1	2	3	4	5
2. National	1	2	3	4	5

o. Potential to violate Federal, State or Local law.regulation designed to control air pollution yes____ no _x_

p. Potential to violate Federal, State or Local law.regulation designed to control water pollution yes____ no _x_

q. Potential involvement with contaminated areas and/or material yes____ no _x_

8. Is the proposed project compatible with the non-DARCOM waste policy? yes_x__ no ____

9. Planned mitigation of adverse impacts:

Mitigation measures necessary for control of disposing/demilitarizing, if any, will be the responsibility of the facilities approved by the U.S. Army Material Readiness Command.

Cartridge, 81MM: Practice, M880

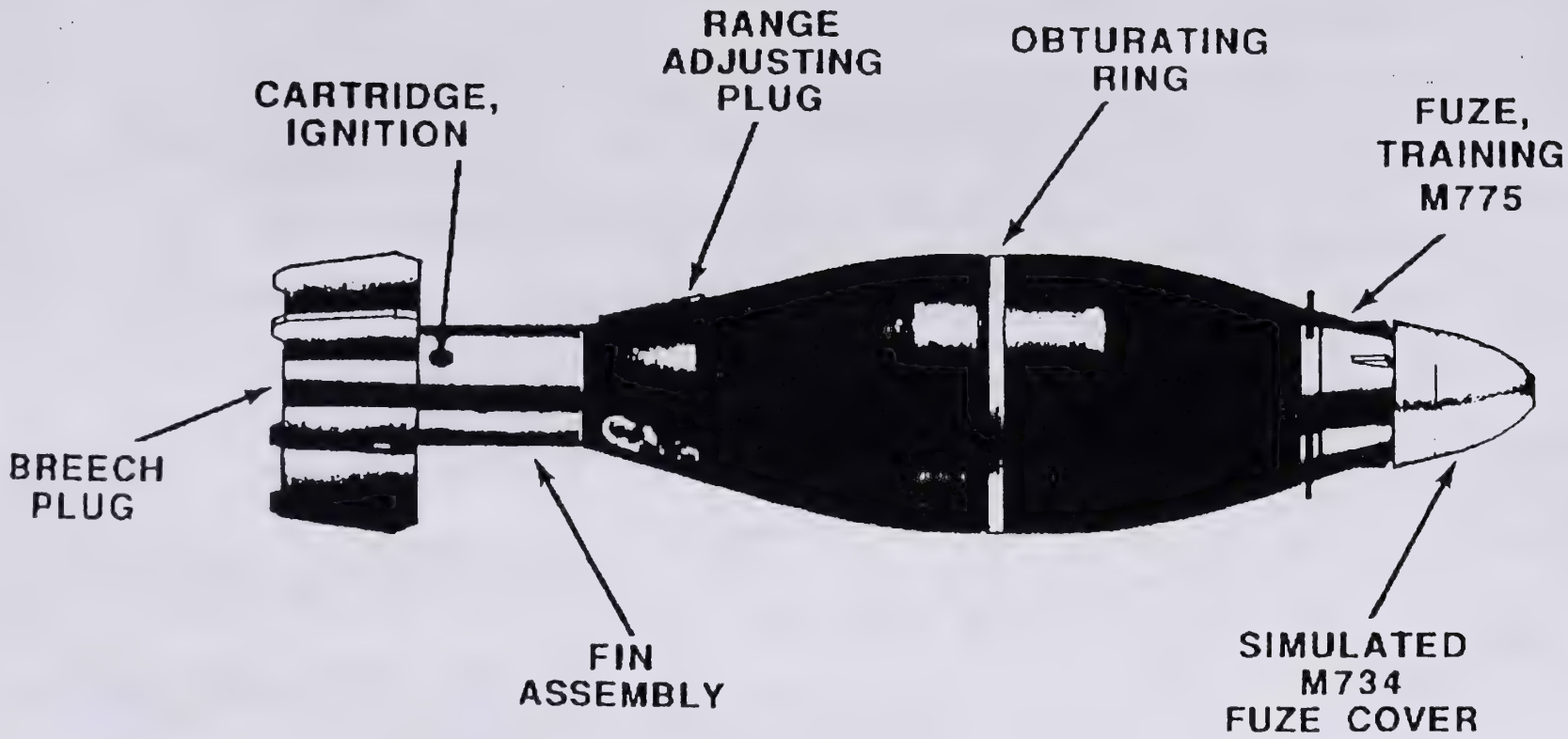

NOTES:-

1-CANNELURE MAY VARY TO SUIT MANUFACTURER'S PRACTICE.
2-COMPOSITION, TRACER R-284, DWG B10522416, 1.2 GR APPROX. CHARGE WEIGHT MAY VARY TO PRODUCE REQUIRED TRACE.
3-COMPOSITION, IGNITER I-550, DWG B10542723, 1.2 GR APPROX. (USED AS SUB-IGNITER). CHARGE WEIGHT MAY VARY TO PRODUCE REQUIRED TRACE.
4-COMPOSITION, IGNITER I-559, DWG B10542722, OR COMPOSITION, IGNITER I-561, DWG C9340703, 1.0 GR APPROX. CHARGE WEIGHT MAY VARY TO PRODUCE REQUIRED TRACE.
5-UNIT WT:- 54-2 GR.

C	REPLACES REV B WITH CHANGE. NORA95 3011 (91221	DC0421	
D	NORA95 2029		

M196
BULLET

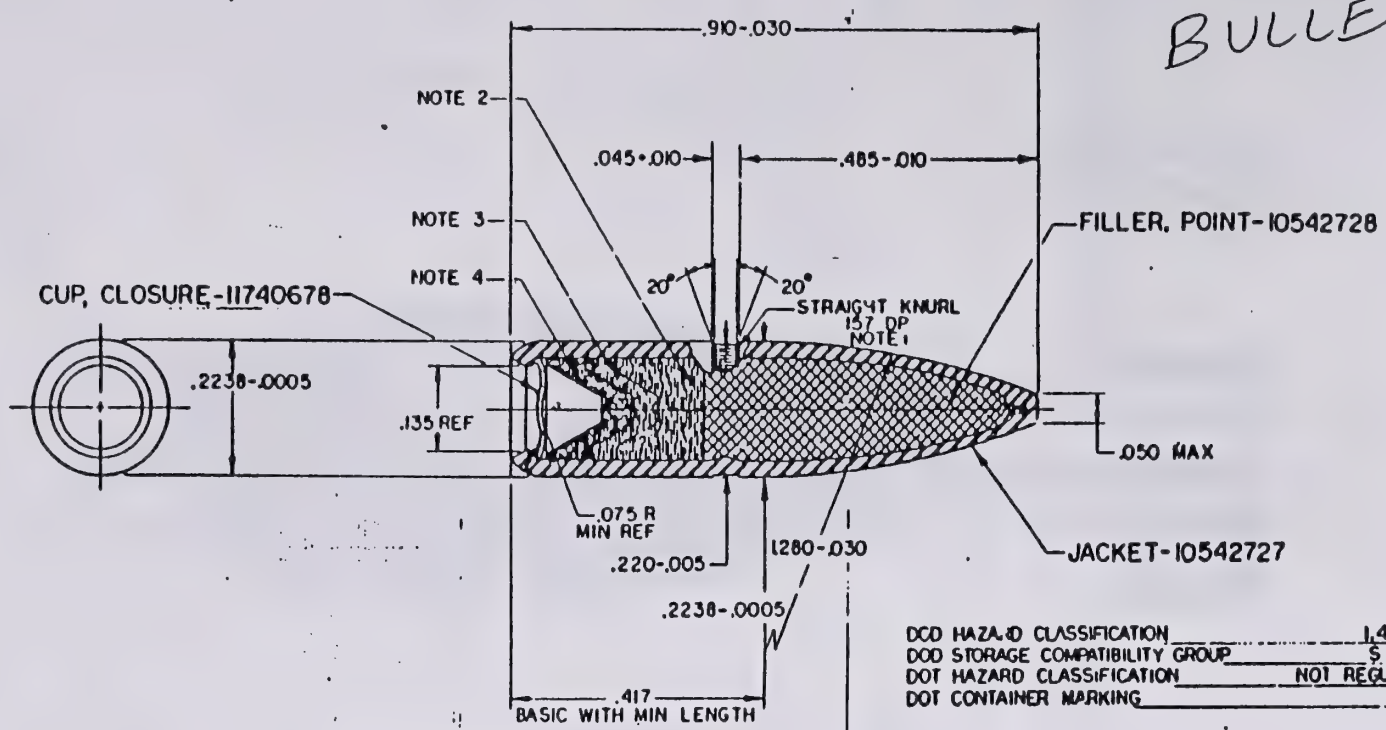

DOD HAZARD CLASSIFICATION 1.4
DOD STORAGE COMPATIBILITY GROUP S
DOT HAZARD CLASSIFICATION NOT REGULATED
DOT CONTAINER MARKING

SEE SEPARATE PARTS LIST 10542726

PART NO. 10542726

10K5341953	CRTG. 5.56MM TRACER, M196	71-11-08	BULLET
			D 19200 10542726
			10/1 NOTE 5

C1052: 6

REVISIONS			
LTR	DESCRIPTION	DATE	APPROVED
N		62172	
P	REPLACES REV'N WITH CHANGES, WAS "B" SIZE. SEE ERR # 530010	2-27-73	
R	NORA9S2030 80-04-21	80-12-09	
T	NORA4Q2097/850524	860516	
U	NOR A6S3062/860826 ECP M7S3044/870512 ECP M7S3151/871124	880210	
V	NOR M8S3143 881229	890612	

NOTES:-
1 - FOR SAFETY DATA REQUIREMENTS REFER TO HAZARDOUS COMPONENT SAFETY DATA SHEET NO. 334.

QUANTITY

INGREDIENT	% DRY WT	SPEC
LEAD STYPHNATE, NORMAL	37 ± 5	MIL-L-757
TETRACENE	4 ± 1	MIL-T-46938(MU)
BARIUM NITRATE (CLASS 1, GRANULATION A)	32 ± 5	MIL-B-162
ANTIMONY SULFIDE (CLASS 1, 2 OR 3)	15 ± 2	MIL-A-159
ALUMINUM POWDER (TYPE III, GRADE F, CLASS 6)	7 ± 1	MIL-A-512
PETN (CLASS 2)	5 ± 1	MIL-P-00387
GUM *		

* GUM/GUM SOLUTIONS USED WITH PRIMER MIX			
DRY CHARGING	WET CHARGING		EXTRUSION CHARGING
NONE REQUIRED	LIGHT GUM SOLUTION (SEE DWG 10522380)	TECHNICAL ACACIA (GUM ARABIC) SEE NOTES 1,2, & 3	GUM KARAYA (SEE DWG 11751130)

NOTES:
1. USE 4.8 ML OF A 42±4% (BY DRY GUM SOLID WEIGHT) SOLUTION OF GUM ARABIC AND WATER FOR EACH POUND OF PRIMER COMPOSITION WHEN WET PRIMER CHARGING PROCESS IS TO BE EMPLOYED. THE USE OF GUM ARABIC SOLUTION IS NOT REQUIRED WHEN DRY CHARGING PROCESS IS USED.
2. THE GUM ARABIC SOLUTION IS PREPARED IN THE FOLLOWING MANNER: 4 POUNDS, 6 OUNCES OF GUM ARABIC AND 2,600 MILLILETERS OF WATER ARE MIXED TOGETHER AND ALLOWED TO STAND FOR 72 HOURS, STIRRING OCCASIONALLY TO DISSOLVE THE GUM ARABIC. THE GUM SOLUTION IS STORED IN A SEALED CONTAINER AND MAY BE REFRIGERATED PRIOR TO USE TO RETARD SPOILAGE.
3. MATERIAL: ACACIA, TECHNICAL, FEDERAL SPECIFICATION JJJ-A-20, CLASS C.

BLENDING PROCEDURE (ADVISORY)

(1) WEIGH AND BLEND THE REQUIRED QUANTITIES OF LEAD STYPHNATE AND TETRACENE (PRIMARY MIXTURE)

(2) WEIGH AND BLEND THE REQUIRED QUANTITIES OF BARIUM NITRATE, ANTIMONY SULFIDE AND ALUMINUM (PREBLEND)

(3) ADD THE PRIMARY MIXTURE, THE PREBLEND, PETN AND GUM SOLUTION TO THE CONTAINER AND MIX THOROUGHLY

(4) PLACE THE BLENDED COMPOSITION IN AIRTIGHT CONTAINER

FOR ALL 5.56mm

CURRENT DESIGN ACTIVITY CAGE CODE 19200
U.S. ARMY
ARMAMENT RESEARCH, DEVELOPMENT AND ENGINEERING CENTER
PICATINNY ARSENAL, NEW JERSEY 07806-5000

PART No. 10522388

MIN. MECHANICAL PROPERTIES	
YS	
TS	
EL %	
RA	
BH	
BH	

10542585	PRIMER M115
7259094	PRIMER M36A2
11751131	PRIMER NO.45
10534279	PRIMER NO.41
10522621	PRIMER NO.34
SEE ENGINEERING RECORDS	
NEXT ASSY	USED ON
APPLICATION	
DO NOT APPLY IDENTIFICATION DO PER MIL-STD-130	

UNLESS OTHERWISE SPECIFIED DIMENSION ARE IN INCHES
TOLERANCES ON DECIMALS ± FRACTIONS ± ANGLES ±
MATERIAL
HEAT TREAT
PROTECTIVE FINISH

ORIGINAL DATE MAY 14, 1962
DRAWN
TRACED
ISSUED
APPROVED

U. S. ARMY
FRANKFORD ARSENAL
PHILADELPHIA, PA. 19137

PRIMER COMPOSITION
FA-956

USE	CODE IDENT NO.	DRAWING NO.
C	19200	10522388

SCALE: UNIT WT.

REV	LTR	DESCRIPTION	DATE	APPROVED
	K	REDRAWN WITH CHANGE EAR 29221112C ECP M752035/870911.	891218	

NOTES:

1. IDENTIFICATION:
   A. SPEC MIL-P-2604, MIL-S-45070 AND MIL-S-[illegible] APPLY.
   B. NITROCELLULOSE, SPEC MIL-N-244 B — REMAINDER
   C. NITROGEN IN NITROCELLULOSE B — 12.00 TO 12.00 (NOTE 1-U)
   D. DINITROTOLUENE, SPEC MIL-D-[illegible] B — NONE (NOTE 1-U)
   E. GRAPHITE, SPEC MIL-G-[illegible] (MAX) B — 0.4
   F. POTASSIUM NITRATE, SPEC MIL-P-[illegible] B — NONE (NOTE 1-V)
   G. SODIUM SULFATE, SPEC MIL-S-[illegible] MAX B — [illegible]
   H. CALCIUM CARBONATE, SPEC MIL-C-[illegible] MAX B — 0.00
   I. NITROGLYCERIN, SPEC MIL-N-[illegible] B — 9.00 TO 11.00
   J. DIPHENYLAMINE, SPEC MIL-D-[illegible] B — 0.40 TO 1.00
   K. DIBUTYLPHTHALATE, SPEC MIL-D-[illegible] B — 3.00 TO 4.00
   L. TIN DIOXIDE (CERAMIC GRADE), SPEC MIL-D-[illegible] B — NONE (NOTE 1-V)
   M. TOTAL VOLATILES (MAX) B — 0.00
   N. MOISTURE AND VOLATILES B — 1.00 TO 0.05
   O. FED BALL SOLVENTS (MAX) B — 1.00
   P. HYGROSCOPICITY (MAX) B — 1.00
   Q. HEAT TEST -(NOTE
      1- DISCOLORATION- MINUTES TO SALMON PINK (MIN) — 90
      2- EXPLOSION HOURS (MIN) — 8
   R. DUST AND FOREIGN MATTER (MAX) B — 0.10
   S. BULK DENSITY — 0.040 TO 1.000
   T. GRANULATION %
      U.S. SIEVE SIZE (NOTE 1-X)

NO. 20	97 (MIN) THRU
NO. 30	50 (MIN) ON AND
NO. 35	7.0 (MAX) THRU
NO. 40	0.0 (MAX) ON AND
NO. 45	

   U. THE PRESENCE OF UP TO 1.00 DINITROTOLUENE IS PERMISSIBLE WHEN REWORKED PROPELLANT INHERENTLY CONTAINING DINITROTOLUENE IS ONE OF THE BASIC MATERIALS OF THE PROCESS USED.
   V. THE PRESENCE OF UP TO 0.40 OF TIN DIOXIDE AND/OR POTASSIUM NITRATE IS PERMISSIBLE WHEN REWORKED PROPELLANT INHERENTLY CONTAINING TIN DIOXIDE AND/OR POTASSIUM NITRATE IS ONE OF THE BASIC MATERIALS OF THE PROCESS USED.
   W. A MINIMUM NITROGEN CONTENT OF 12.000 IS PERMISSIBLE WHEN REWORKED PROPELLANT IS ONE OF THE BASIC MATERIALS OF THE PROCESS USED.

2. IDENTIFICATION OF THE APPROVED SOURCES OF SUPPLY HEREON IS NOT TO BE CONSTRUED AS A GUARANTEE OF PRESENT OR CONTINUED AVAILABILITY AS A SOURCE OF SUPPLY FOR THE ITEM.

3. APPROVED SOURCES OF SUPPLY:

OLIN CORP., POWDER OPERATIONS	BADGER ARMY AMMO PLANT
P.O BOX [illegible]	BAR1000, OK 63013
ST. MARKS, FL. 32355	PART NO. WC844
PART NO. WC844	FSCM NO. 00000
FSCM NO. 00070	

4. ONLY THE ITEM DESCRIBED ON THIS DRAWING WHEN PROCURED FROM THE VENDOR LISTED HEREON IS APPROVED BY ARDEC FOR USE IN THE APPLICATION(S) SPECIFIED HEREON. A SUBSTITUTE ITEM SHALL NOT BE USED WITHOUT PRIOR APPROVAL BY ARDEC.

FOR M193 BALL
M196 TRACER
M855 BALL
M856 TRACER

DOD HAZARD CLASSIFICATION 1.1
DOD STORAGE COMPATIBILITY GROUP C
DOT HAZARD CLASSIFICATION 1
DOT CONTAINER MARKING [illegible]

10542743-3	CRTG, 5.56MM, BALL, M855	9342868
10542743-2	CRTG, 5.56MM, TRACER M196	10534193
10542743-1	CRTG, 5.56MM BALL, M193	10523632
PART NO.	USED ON	NEXT ASSY

SOURCE CONTROL DRAWING

PART NO. SEE TABLE

FINIS		DO NOT SCALE DRAWING UNLESS OTHERWISE SPECIFIED TOLERANCES ON DECIMAL FRACTION	
MECHANICAL PROPERTIES			
	SEE TABLE	THIRD ANGLE PROJECTION	
	NEXT ASSY / USED ON		
	APPLICATION		

MATERIAL		
CONTRACTOR		
DRAWN	MBD	90-08-09
CHECKED	KJK	KJK
	A. HIRSCH	
	C.E. SHINDLER	

PROPELLANT, WC844

SIZE	FSCM NO.	
D	19200	10542743

SCALE | SHT NO. | SHEET

SMCAR FORM 60, 1 DEC 87(TEMP), REPLACES SMCAR FORM 60, 1 MAR 87(TEMP), WHICH MAY BE USED UNTIL EXHAUSTED

DRAWING SIZE D
(ARSAROCOMP 79-12)

NOTES:

1. SPEC MIL-A-2550 AND ANSI Y14.5M-1982 APPLY.
2. KNURL OR GROOVE (MAX DEPTH .003 INCHES, MAX WIDTH .04 INCHES), OPTIONAL FOR MANUFACTURING IDENTIFICATION ONLY.
3. UNIT WEIGHT 682.5 - 27 GRAINS.
4. INCENDIARY COMPOSITION, EITHER LOOSE CHARGE:
   INCENDIARY COMPOSITION IM-11, DWG 10522392
   (18. - .5 GRAINS) OR PELLETS:
   INCENDIARY COMPOSITION IM-101, DWG 10522400
   (11.75 - .9 GRAINS) OR LOOSE CHARGE:
   INCENDIARY COMPOSITION IM-20, DWG 10522394
   (APPROX 12 GRAINS).
5. WEIGHT TOLERANCE INCREASED 100 GRAINS TO COMPENSATE FOR LOSS OF METAL AFTER CUTTING CANNELURE.

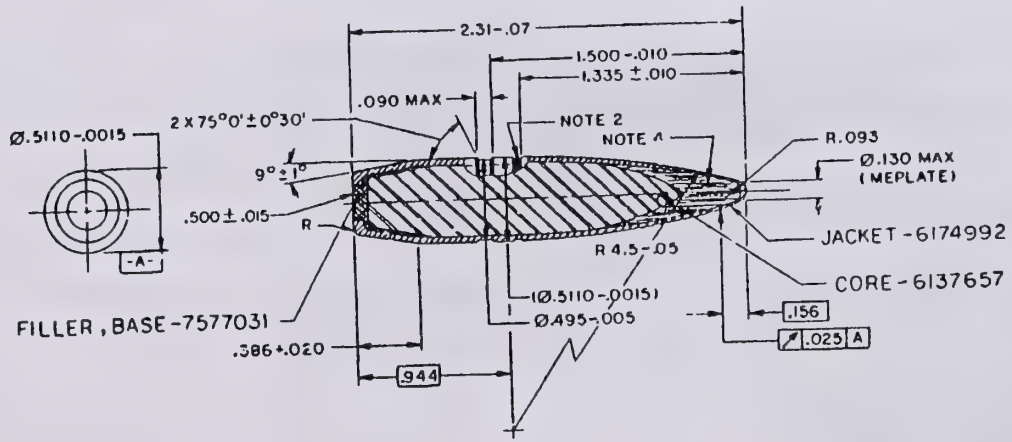

DOD HAZARD CLASSIFICATION 1.4
DOD STORAGE COMPATIBILITY GROUP S
DOD HAZARD CLASSIFICATION C
DOT CONTAINER MARKINGS AMMUNITION NOS EXPLOSIVE

REVISIONS			
SYM	DESCRIPTION	DATE	APPROVAL
F	REPLACES REV E WITH CHANGES NOR A552011/030903	030901	
G	ERR Z921296P (ECP MOS3058/900730)	901203	
H	NOR MOS3081/901207	910313	

SEE SEPARATE PARTS LIST 7636175

NEXT ASSY	USED ON
7553432	CTRG, CAL .50 API, VB, SLS
7670238	CTRG, CAL .50 API, MB

APPLICATION

MECHANICAL PROPERTIES

DO NOT SCALE DRAWING
UNLESS OTHERWISE SPECIFIED DIMENSIONS ARE IN INCHES
TOLERANCES ON DECIMALS ± .005
FRACTIONS ± ANGLES ±

GENERAL DATE OF DRAWING OCT 9 1943

MARTIN BERO
J. CHARNO

PART NO. 7636175

FRANKFORD ARSENAL, PHILADELPHIA, PA

BULLET

SIZE D | FSCM NO. 19200 | 7636175

SCALE 3/1 | UNIT WT. | SHEET

REVISIONS			
A	(1-2) SEE ECO S 80067	32468	
B	(1-7) SEE ERR S 200186	2-5-73	
C	NOR A4S2001, 840216	840416	

C10535494

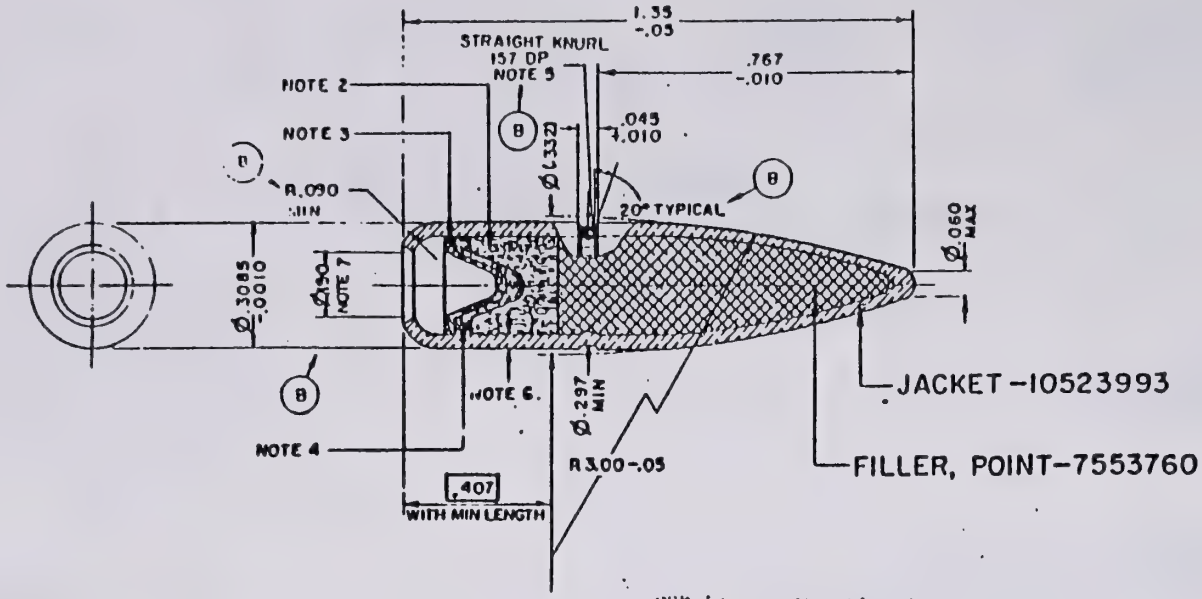

NOTES:—

1-SPEC MIL-A-2550 AND ANSI Y14.5M-1982 APPLY.
2-COMPOSITION, TRACER R-284, DWG B10522416, 6.5 GRAINS APPROX CHARGE WEIGHT TO PRODUCE REQUIRED TRACE
3-COMPOSITION, IGNITER I-136, DWG B10522417, 1.0 GRAIN APPROX CHARGE WEIGHT TO PRODUCE REQUIRED TRACE
4-COMPOSITION, SUB-IGNITER I-280, DWG B10522421, 1.0 GRAIN APPROX CHARGE WEIGHT TO PRODUCE REQUIRED TRACE
5-CANNELURE MAY VARY TO SUIT MANUFACTURER'S PRACTICE
6-WALL THICKNESS .036-.003 OVER CYLINDRICAL LENGTH OF BULLET
7-VARIATION IN BASE RADIUS AND APERTURE DIAMETER PERMITTED TO COMPLY WITH TRACE PERFORMANCE REQUIREMENTS

(B) DOD HAZARD CLASSIFICATION 1.4
DOD STORAGE COMPATIBILITY GROUP S
DEPARTMENT OF TRANSPORTATION (DOT) HAZARD CLASS NOT REGULATED
DOT CONTAINER MARKINGS AMMUNITION, NON-EXPLOSIVE

U.S. ARMY ARMAMENT RESEARCH AND DEVELOPMENT CENTER
DOVER, NEW JERSEY 07801

(A) SEE SEPARATE PARTS LIST 10535494

PART NO. 10535494
FSCM NO. 19200

(A) C10535493

SEE ENGINEERING RECORDS

DATE OF DRAWING JULY 9, 1963

BULLET

SCALE - 5/1

UNIT WT :- 146-4 GRAINS

US ARMY
FRANKFORD ARSENAL

SIZE C

10535494

SHEET 1 OF 1

SC

DRAWING SIZE C
(ARRADCOM-R 78-13)

NOTES:-

1-SPEC MIL-A-2550 AND ANSI Y14.5M-1982 APPLY.
2-VARIATION IN CUP SEATING AND BULLET BASING PERMITTED TO COMPLY WITH AIRTIGHTNESS AND TRACE PERFORMANCE REQUIREMENTS (APPLY TO CLOSURE CUP, APERTURE DIAMETER AND BASE RADIUS).
3-COMPOSITION, TRACER R-284 DWG B10522416, 6.5 GRAINS APPROX CHARGE WEIGHT TO PRODUCE REQUIRED TRACE.
4-COMPOSITION, IGNITER I-136 DWG B10522417, 1.0 GRAIN APPROX CHARGE WEIGHT TO PRODUCE REQUIRED TRACE.
5-COMPOSITION, SUB-IGNITER I-280, DWG B10522421, 1.0 GRAIN APPROX CHARGE WEIGHT TO PRODUCE REQUIRED TRACE.
6-CANNELURE MAY VARY TO SUIT MANUFACTURER'S PRACTICE.
7-WALL THICKNESS .036-.003 OVER CYLINDRICAL LENGTH OF BULLET.

REVISIONS			
SYM	DESCRIPTION	DATE	APPROVAL
B	REPLACES REV A WITH CHANGE NOR A9S2046 80-05-30	800710	
C	NOR A4S2001, B40216	840416	

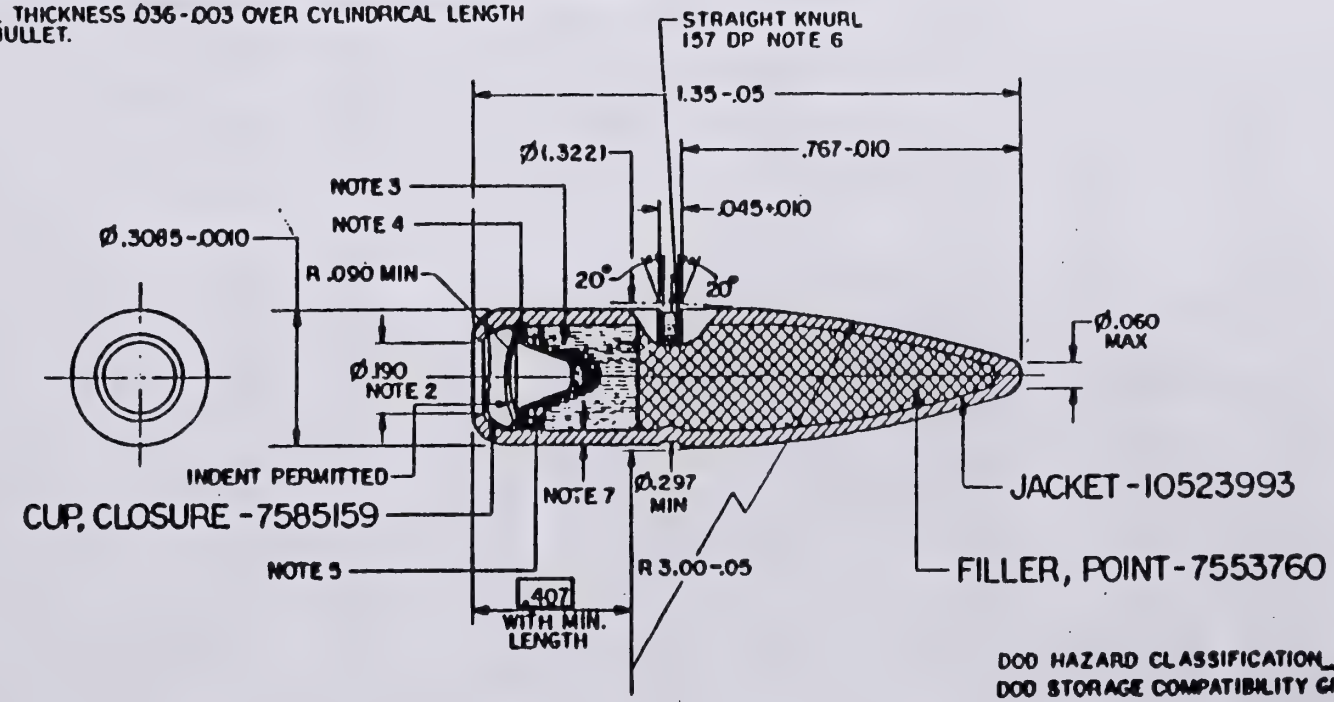

DOD HAZARD CLASSIFICATION 1.4
DOD STORAGE COMPATIBILITY GROUP S
DEPARTMENT OF TRANSPORTATION (DOT) HAZARD CLASS NOT REGULATED
DOT CONTAINER MARKINGS "AMMUNITION, NON-EXPLOSIVE"

SEE SEPARATE PARTS LIST -10523994

PART NO. 10523994

10522000 NEXT ASSY	CATG 7.62 MM MATG TRACER USED ON	MECHANICAL PROPERTIES	DO NOT SCALE DRAWING UNLESS OTHERWISE SPECIFIED DIMENSIONS ARE IN INCHES TOLERANCES ON DECIMALS ± FRACTIONS ± ANGLES ± 0° 30'	ORIGINAL DATE OF DRAWING 63-03-01 DRAWN B.B. CHECKED	U S ARMY ARMAMENT RESEARCH AND DEVELOPMENT CENTER DOVER, NEW JERSEY 07801
APPLICATION		TP YS ELT RA BH SH		UNLR UNLR UNLR UNLR	BULLET
					SIZE C FSCM NO. 19200 10523994
					SCALE 5/1 UNIT WT. 146-4GRS SHEET

-AMSTA-AR-CCL-B 13 Mar 96

MEMORANDUM FOR Capt. T. Norris
SUBJECT: Energetic Material Information for 5.56mm Ammunition

1. Reference Phoncon of 12 Mar 96

2. As discussed in the referenced Phoncon, I am forwarding you the subject information. I will provide you with the products of combustion of these materials hopefully within the next few days. This is a computer simulation of what compounds would be generated upon ignition.

3. The approximate amount of these materials used per cartridge is as follows:

Primer mix (FA-956)	.380 Grains
Propellant (all)	28.5 Grains
Tracer Mix(R-284)	1.2 Grains
Igniter Mix (I-560)	1.2 Grains
Igniter Mix (I-561)	1.0 Grains

4. The WC844 Propellant is used in the M193 Ball, M196 Tracer, M855 Ball and M856 Tracer. The WC814 Propellant is only used in the M200 Blank round.

5. The enclosed Bullet drawing no. 10542726 shows how these tracer/igniter mixes are used. The Igniter mix I-559 shown on this drawing is not used. The I-56i is used in it's place.

6. If you have any questions concerning the information provided, or require further assistance, please contact the undersigned on DSN 880-6497 or Commercial (201) 724-6497.

ROBERT J. WAGNER
Project Group Leader
Small Caliber Ammo Br.

ENERGETICS IN CALIBER .50 CARTRIDGES

Alpha - ball/tracer
Target
4 ball/1 trac
mod

M33 BALL

Propellant:

WC-860, 235 grains (dwg 10534811)
OR
IMR-5010, 235 grains (dwg 10534796)

M8 INCENDIARY (bullet dwg 7636175)

Propellant:

WC-860, 233 grains (dwg 10534811)
OR
IMR-5010, 233 grains (dwg 10534796)

Incendiary:

Incendiary Composition IM-11, 15 grains (dwg 10522392)
OR
Incendiary Composition IM-161, 11.5 grains (dwg 10522400)
Incendiary Composition IM-28, 12 grains (dwg 10522394)

M17 TRACER (bullet dwg 12953486)

Propellant:

IM R-5010, 225 grains (dwg 10534796)

Tracer:

Igniter Composition I-136, 14 grains (dwg 10522417)
Igniter Composition I-280, 15 grains (dwg 10522421)
Tracer Composition R-284, 40 grains (dwg 10522416)

1 tra

M20 APIT (bullet dwg 7638265)

Propellant:

IMR-5010, 230 grains (dwg 10534796)

Tracer:

Igniter Composition I-280, 1.2 grains (dwg 10522421 & 10522418)
Tracer Composition R-256, 10 grains (dwg 10521775)
OR
Tracer Composition R-284, 10 grains (dwg 10522416)

Incendiary:
Incendiary Composition IM-11, 15 grains (dwg 10522392)
OR
Incendiary Composition IM-161, 11.5 grains (dwg 10522400)
Incendiary Composition IM-28, 12 grains (dwg 10522394)

2/10/1997 76

List of Information on .50 cal machine gun and 7.62 mm MG:

.50 Cal only has igniter & sub-igniter
↑ 136 ↑ 280

Dick should have the spreadsheet for these.

7.62 MG:

propellant	46 grains	(846)
tracer	6.5 grains	(284)
igniter	1.0 grains	(136)
sub-igniter	1.0 grains	(280)

The smaller caliber ~~weapons~~ rounds (9mm, .38 cal, .40 cal, .45 cal) are all made up same components of other rounds. It will be conservative to say these are ~~.56~~ 5.56mm (count)

JHW

APPENDIX E. REPORTS ON BYPRODUCTS OF SMOKE GENERATION

AO Point 22
Brief, FN4

Toxicity of Military Smokes and Obscurants

Volume 1

SUBCOMMITTEE ON MILITARY SMOKES AND OBSCURANTS

COMMITTEE ON TOXICOLOGY

BOARD ON ENVIRONMENTAL STUDIES AND TOXICOLOGY

COMMISSION ON LIFE SCIENCES

NATIONAL RESEARCH COUNCIL

NATIONAL ACADEMY PRESS
WASHINGTON, D.C., 1997

Military Applications

HC smoke is used by the U.S. military in a wide variety of munitions, some of which are shown in Table 5-1. HC smoke is produced by burning a mixture containing roughly equal parts of HCE and ZnO and approximately 6% granular aluminum.

Combustion Products

The smoke mixture in a smoke bomb or grenade is initially ignited by a pyrotechnic starter mixture. The reaction is self-perpetuating and exothermic. The overall reaction was summarized by Cichowicz (1983):

$$2\ Al + C_2Cl_6 + 3\ ZnO \rightarrow 3\ ZnCl_2 + Al_2O_3 + 2\ C + heat.$$

Another reaction produces carbon monoxide instead of solid carbon. $ZnCl_2$ leaves the reaction zone as a hot vapor. On cooling below the condensation point, it nucleates to form an aerosol that rapidly absorbs water from the surrounding atmosphere. Hydrated $ZnCl_2$ particles then scatter light, thereby obscuring vision. Because of $ZnCl_2$'s affinity for water, the aerosol likely consists of the hydrated forms of $ZnCl_2$ under most atmospheric conditions (Katz et al. 1980). A starter mixture containing silicon, potassium nitrate, charcoal, iron oxide, granular aluminum, cellulose nitrate, and acetone, which is required to initiate the reaction, might generate very small amounts of other airborne contaminants. However, the acute toxic effects of exposure to HC smoke are considered to arise primarily from inhalation of the $ZnCl_2$ component, which comprises almost two thirds of the total mass of HC smoke (Table 5-2). All measurements of HC smoke are expressed in this chapter as milligrams of $ZnCl_2$, unless noted otherwise.

The munitions listed in Table 5-1 all use slightly different chemical mixtures (Novak et al. 1987). An analysis of trace mate-

TABLE 5-1 Characteristics of HC Smoke Munitions

Smoke-Pot Munitions[a]	Container Size (in.)	Filling Weight (lb)	Ignition Method	Weight (lb) (approx.) with Fuse	Delay Time (sec)	Burning Time (min)
Smoke pot, HCE, 10-lb, M1	9 by 5.5 diameter	10	Matchhead and scratcher blocker electrical	12.5	10	5-8
Smoke pot, HCE, 30-lb, ABC-M5	9.5 by 8.5 diameter	31	Matchhead and scratcher block or electrical	33	20-30	2-22
[illegible]	13 by 12	27.5	M207A1 smoke-[illegible] use	38	10-20	10-15

ons

litary in a wide variety of . Table 5-1. HC smoke is ing roughly equal parts of anular aluminum.

cts

nb or grenade is initially The reaction is self-per- reaction was summarized

$Al_2O_3 + 2\ C + heat.$

sid instead of solid car- a vapor. On cooling s to form an aerosol that ding atmosphere. Hy- hereby obscuring vision. aerosol likely consists of atmospheric conditions ining silicon, potassium ninum, cellulose nitrate, the reaction, might gen- e contaminants. How- HC smoke are consid- f the $ZnCl_2$ component, otal mass of HC smoke ke are expressed in this d otherwise. ll use slightly different analysis of trace mate-

TABLE 5-1 Characteristics of HC Smoke Munitions

Smoke-Pot Munitions[a]	Container Size (in.)	Filling Weight (lb)	Ignition Method	Weight (lb) (approx.) with Fuse	Delay Time (sec)	Burning Time (min)
Smoke pot, HCE, 10-lb, M1	9 by 5.5 diameter	10	Matchhead and scratcher blockor electrical	12.5	10	5-8
Smoke pot, HCE, 30-lb, ABC-M5	9.5 by 8.5 diameter	31	Matchhead and scratcher block or electrical	33	20-30	2-22
Smoke pot, floating, HCE, M4A2	13 by 12 diameter	27.5	M207A1 smoke-pot fuse	38	10-20	10-15
Smoke grenade, HCE, M8	4.75 by 2.5 diameter	1.2	M201A1 fuse	1.5	0.7-2[b]	1.7-2.5
Cartridge,[c] 105-mm, HCE, M84A1		12.3	Mechanical, time, and super-quick fuse	13.0	60-90	3
Projectile,[d] 155-mm, HCE, M116A1		25.8	Mechanical, time, and super-quick fuse	26.2	60-90	4

[a]All HC smokes are type C, which contains granular aluminum, hexachloroethane, and zinc oxide. Other types of HC smoke were used in the early years of smoke generation.

[b]Time to functioning after release of safety lever.

[c]No future production for the M84A1 was planned as of 1983.

[d]M116A1 was completing its production life cycle in 1983 and would be replaced by XM 825 white phosphorus fill.

Source: Cichowicz (1983).

TABLE 5-2 Approximate Composition of HC Smoke[a]

Constituent	Estimated Mass Fraction, %
Zinc chloride	62.5
Zinc oxide	9.6
Iron oxide[b]	10.7
Aluminum oxide[b]	5.4
Lead oxide[b]	1.0
Total particulate phase	89.2
Chlorinated vapors	10.8

[a]The analysis does not take into account any liquid water that associates with $ZnCl_2$.

[b]These metals were assumed to be present as the oxide for purposes of calculating the mass fraction.

Source: DeVaull et al. (1989).

rials in HC smoke mixtures found common zinc impurities (Katz et al., 1980). Arsenic ranged from 0.13 to 5.0 microgram per gram (μg/g), mercury from 0.35 to 0.60 μg/g, cadmium from 53 to 1,523 μg/g, and lead from 50 to 858 μg/g. The cadmium and lead concentrations displayed a strong negative correlation.

Trace gas-phase products were measured in a field test of a standard M5-HCE 30-lb smoke pot (Katz et al. 1980). Table 5-3 shows the resulting gas-phase products at two distances from the pot. Laboratory tests showed that hydrogen chloride (HCl) vapor formation decreased with increasing relative humidity (Katz et al. 1980). Because the field test was performed at −2°C, humidity was probably low. Thus, HCl vapor concentrations shown in Table 5-3 could be much higher than those produced under more humid conditions. However, Katz et al. (1980) speculated that under humid conditions, HCl is absorbed from the vapor phase into $ZnCl_2$ and water aerosol particles. Therefore, with increasing humidity, exposure of respiratory tissue to HCl might shift to lower portions of the lung, because small aerosol particles can penetrate to the lower lung and vapor can be removed readily from incoming air in the upper airways. During four field tests, estimated chlorine (Cl_2) production ranged from 3 to 19 mg/g of mixture combusted.

Aerosol formation wa
down HC smoke pots (Ka
the count-mean diameters
and 0.3 μm, respectively, a
served size distribution w
concentrations (<3 x 10^6 p
modal at higher concentra
tent effect on the total p
size. As the aerosols age
and count-mean diameter
tration decreased by a fact

Laboratory-produced
and Cl^{-1} (Katz et al. 1980
0.49% to 4.06% of the Zn
lead content ranged from
mium content ranged
both lead and cadmiu
in the unburned mixture

Physical and Che

CAS no.:
Molecular formula:
Molecular weight:
Chemical name:
Synonyms:
Physical state:
Melting point:
Boiling point:
Density:
Vapor pressure:
Solubility:

Aerosol formation was studied in a chamber using scaled-down HC smoke pots (Katz et al. 1980). The mass-median and the count-mean diameters produced were approximately 0.4 μm and 0.3 μm, respectively, averaged over 29 experiments. The observed size distribution was log-normal at lower initial particle concentrations (<3 x 10^6 particles per cubic centimeter) and multimodal at higher concentrations. Relative humidity had no consistent effect on the total particulate concentration or the particle size. As the aerosols aged over a 2-hr period, the mass-median and count-mean diameters nearly doubled as the particle concentration decreased by a factor of about 6.

Laboratory-produced HC smoke consisted primarily of Zn^{+2} and Cl^{-1} (Katz et al. 1980). The aluminum content ranged from 0.49% to 4.06% of the Zn content, with a mean of 1.79%. The lead content ranged from 0.13 to 2.2 μg/mg of Zn, and the cadmium content ranged from 0.18 to 5.0 μg/mg of Zn. The ratios of both lead and cadmium to zinc were slightly higher than the ratios in the unburned mixture and were well correlated with them.

Physical and Chemical Properties of Zinc Chloride

CAS no.:	7646-85-7
Molecular formula:	$ZnCl_2$
Molecular weight:	136.29
Chemical name:	Zinc chloride
Synonyms:	Butter of zinc, zinc butter, zinc
Physical state:	Solid
Melting point:	290°C
Boiling point:	732°C
Density:	2.907 at 25°C
Vapor pressure:	1 mm Hg at 428°C
Solubility:	4.32 x 10^6 mg/L at 25°C
	6.15 x 10^6 mg/L at 100°C
	1 g/1.3 mL ethyl alcohol
	1 g/2 mL glycerol
	1 g/0.25 mL 2% hydrochloroacetic acid